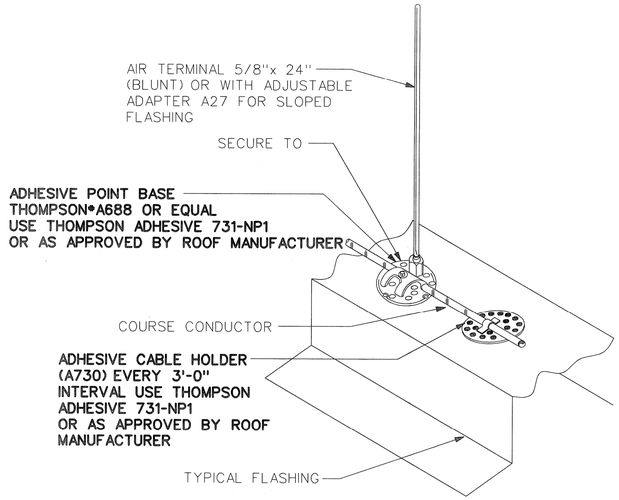

1/E03 AIR TERMINAL/HOLDER TO ROOF INSTALLATION

NOT TO SCALE

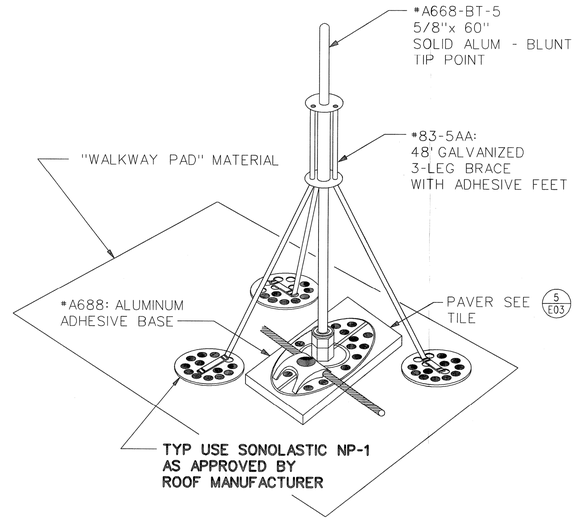

2/E03 BRACED AIR TERMINAL INSTALLATION

NOT TO SCALE

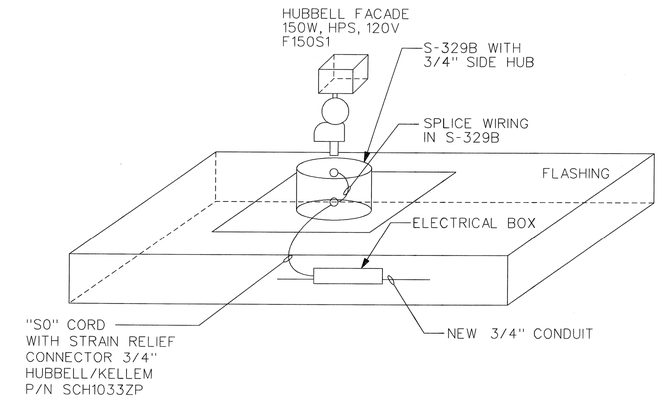

6/E03 LIGHT FIXTURE INSTALLATION

NOT TO SCALE

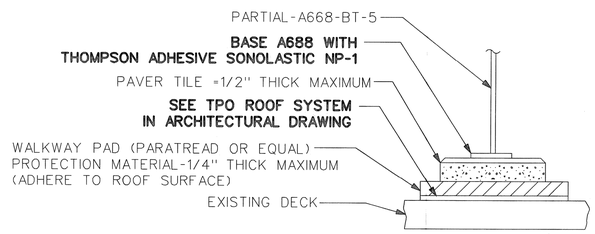

5/E03 AIR TERMINAL/PAVER

NOT TO SCALE

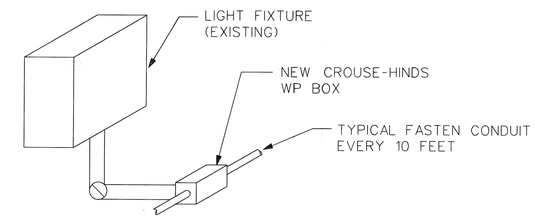

7/E03 SECURITY FLOOD LIGHTS

NOT TO SCALE

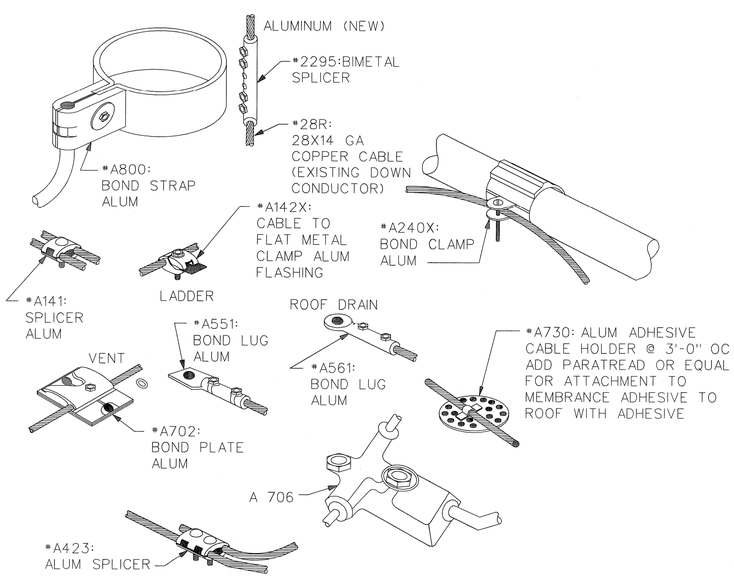

4/E03 BONDING AND INSTALLATION HARDWARE

NOT TO SCALE

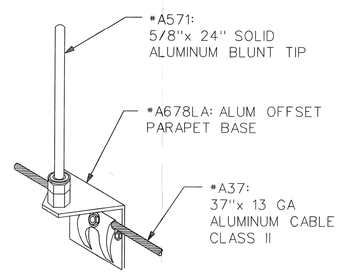

3/E03 MECHANICAL EQUIPMENT MOUNTING

NOT TO SCALE

REV	DATE	DESCRIPTION	JCN	REDLINE DATE	APVD
A	06/21/2007	ENGINEERING REVISION RWK	622128	06/19/2007	

DEPARTMENT OF TRANSPORTATION
FEDERAL AVIATION ADMINISTRATION
ATLANTA IMPLEMENTATION CENTER **ATLANTA, GA**

ARTCC
CONTROL WING ROOF
LIGHTNING PROTECTION, LIGHTING DETAILS AND PANELBOARD SCHEDULES

MEMPHIS MEMPHIS CENTER TN

REVIEWED BY	SUBMITTED BY ORIGINAL DRAWING SIGNED BY:	APPROVED BY ORIGINAL DRAWING SIGNED BY:
	VI V.Ho	Angel A.Arroyo
	SR ENGR, ENROUTE PLATFORM	MGR PLATFORM OPS, ENROUTE

DESIGNED VH
DRAWN BH
CHECKED
ISSUED BY NAS IMPLEMENTATION ANI-300
DATE 11/13/2006 JCN
DRAWING NO ZME-D-622128-E03 REV A

ISSUED FOR FIELD REVISION

EDM: ZME-D-622128-E03.dgn

DRAWING PRODUCED ON ASD BO MICROSTATION SYSTEM