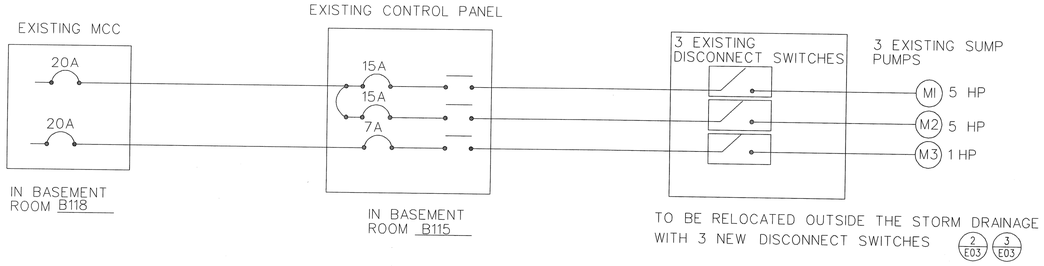

1/E03 SINGLE LINE - EXISTING CONDITION

NOT TO SCALE

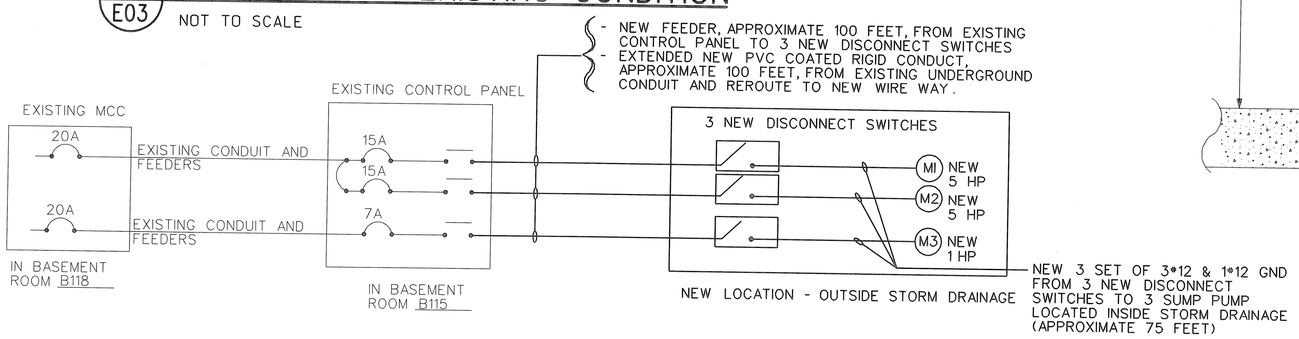

2/E03 SINGLE LINE - NEW CONDITION

NOT TO SCALE

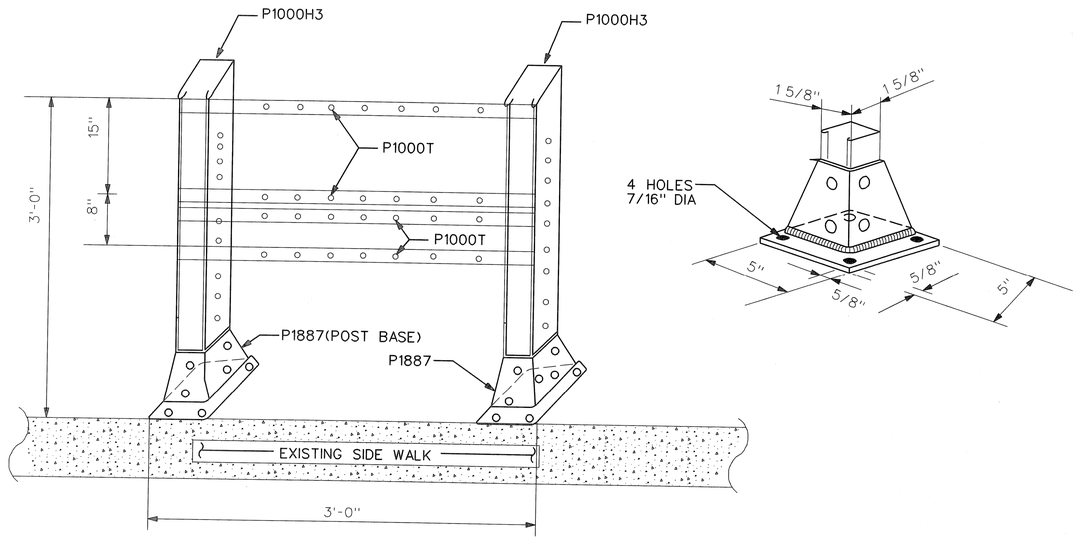

NOTE:
ANCHOR POST(P1887) TO SIDE WALK USING FOUR (4) 3/8" DIAM x 4" EMBED KWIK BOIT EXPANSION ANCHORS BY HILTI. ALL UNISTRUT, BOLT, SCREW, ETC...SHALL BE STAINLESS STEEL.

4/E03 DISCONNECT SWITCH SUPPORTING DETAIL

NOT TO SCALE

NOTE

1. BRANCH CIRCUIT CONDUIT RUNS ARE DIAGRAMMATIC. CONTRACTOR TO FIELD VERIFY THE DISTANCE. COORDINATE WITH COR AND ESU.

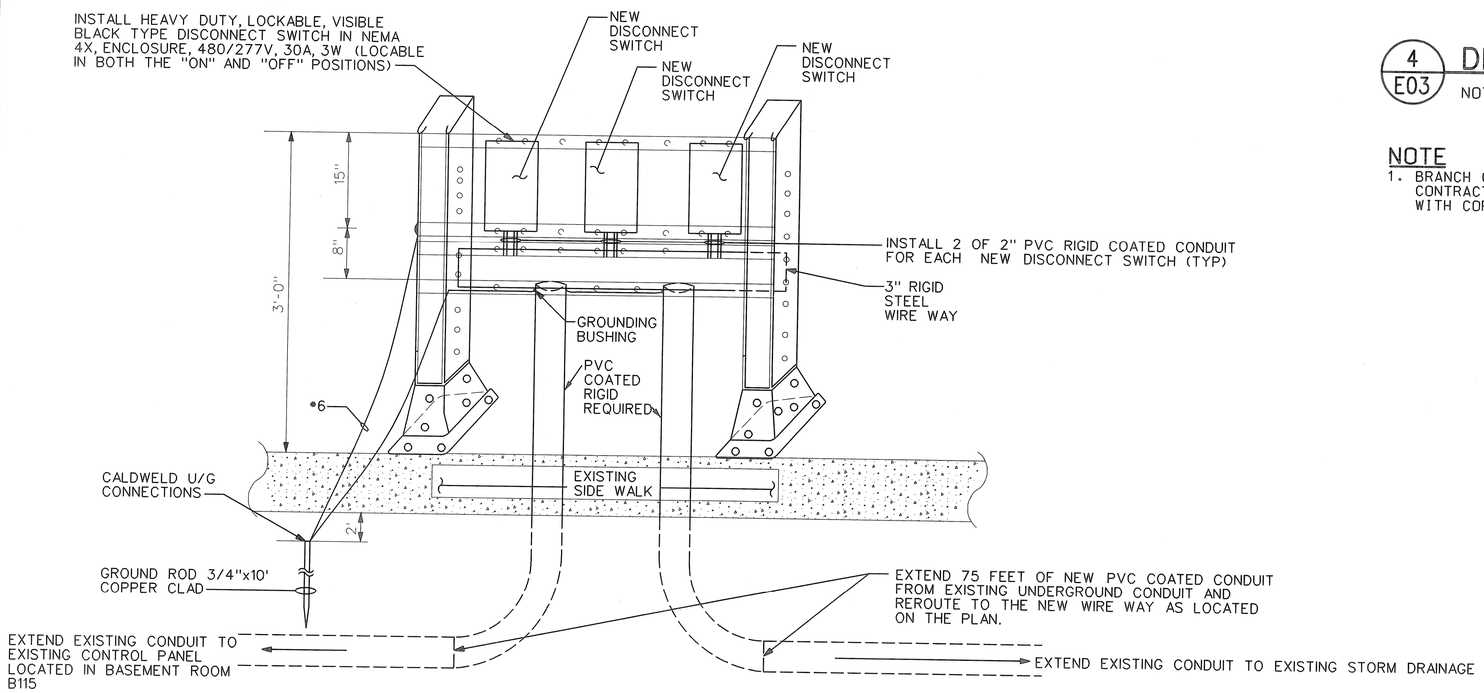

3/E03 DISCONNECT SWITCHES, CONDUIT, AND SUPPORT DETAILS

NOT TO SCALE

REV	APPROVED DATE	DESCRIPTION	JCN	REDLINE DATE	APVD
B	12/15/2008	ENGINEERING REVISION (R. ESTRADA) NXS	622533	12/08/2008	
A	11/17/2008	ENGINEERING REVISION DS	622533	11/13/2008	RE

DEPARTMENT OF TRANSPORTATION
FEDERAL AVIATION ADMINISTRATION
ATO - TECHNICAL OPERATIONS **EASTERN SERVICE AREA**

ARTCC

STORM WATER PUMPS AND SEWER SYSTEM REPLACEMENT PROJECT STORM SINGLE LINE AND DETAILS

HILLIARD JACKSONVILLE CENTER FL

REVIEWED BY

SUBMITTED BY ORIGINAL SIGNED BY: *VI V.Ho* PROJECT ENGINEER

APPROVED BY ORIGINAL SIGNED BY: *Roberto Estrada,for* MGR: ENGINEERING - ATLANTA

DESIGNED VHO
DRAWN DS
CHECKED

ISSUED BY ENGINEERING SERVICES ENROUTE/FSS

DATE 06/26/2008 JCN 622533
DRAWING NO ZJX-D-622533-E03 REV B

ISSUED FOR: FIELD REVISION

EDM: ZJX-D-622533-E03.DGN

$FILES$ $NAME$
$DATES$ $TIME$