TRANE®

Split Systems

Cooling Units - 7½ - 20 Tons (60 Hz)
Air Handlers - 5-20 Tons (60 Hz)
Cooling Coils - 10 Tons

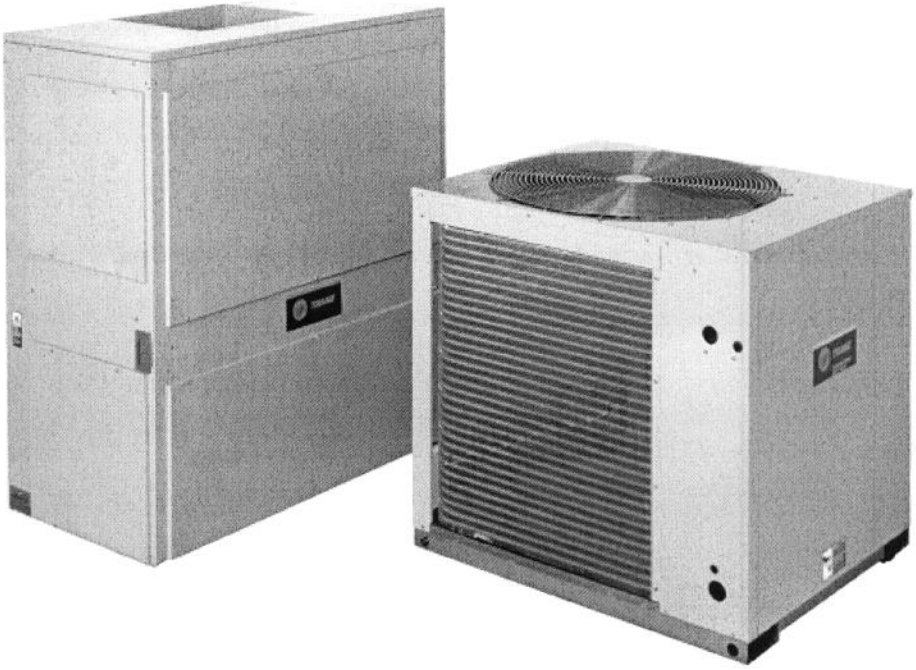

February 2008

SS-PRC002-EN

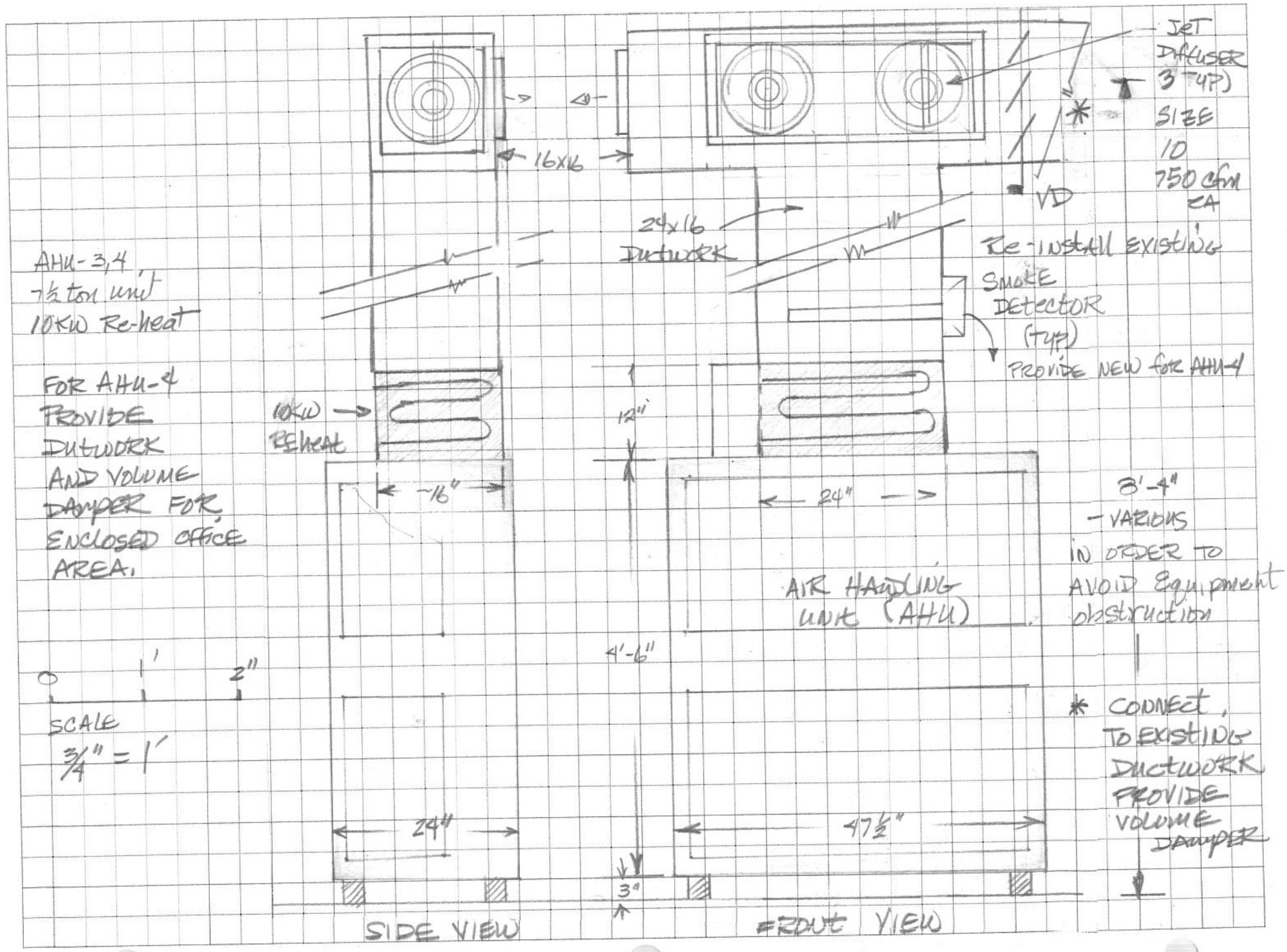
AHU-3,4
7½ ton unit
10KW Re-heat
FOR AHU-4 PROVIDE DUCTWORK AND VOLUME DAMPER FOR ENCLOSED OFFICE AREA.
0
1'
2"
SCALE
3/4" = 1'
16x16
10KW REHEAT
~16"
24"
SIDE VIEW
24x16 DUCTWORK
12"
4'-6"
3"
24"
47½"
FRONT VIEW
JET DIFFUSER (3 TYP)
SIZE 10
750 CFM
CA
VD
Re-INSTALL EXISTING SMOKE DETECTOR (TYP)
PROVIDE NEW for AHU-4
AIR HANDLING UNIT (AHU)
8'-4" - VARIOUS IN ORDER TO AVOID Equipment obstruction
* CONNECT TO EXISTING DUCTWORK PROVIDE VOLUME DAMPER

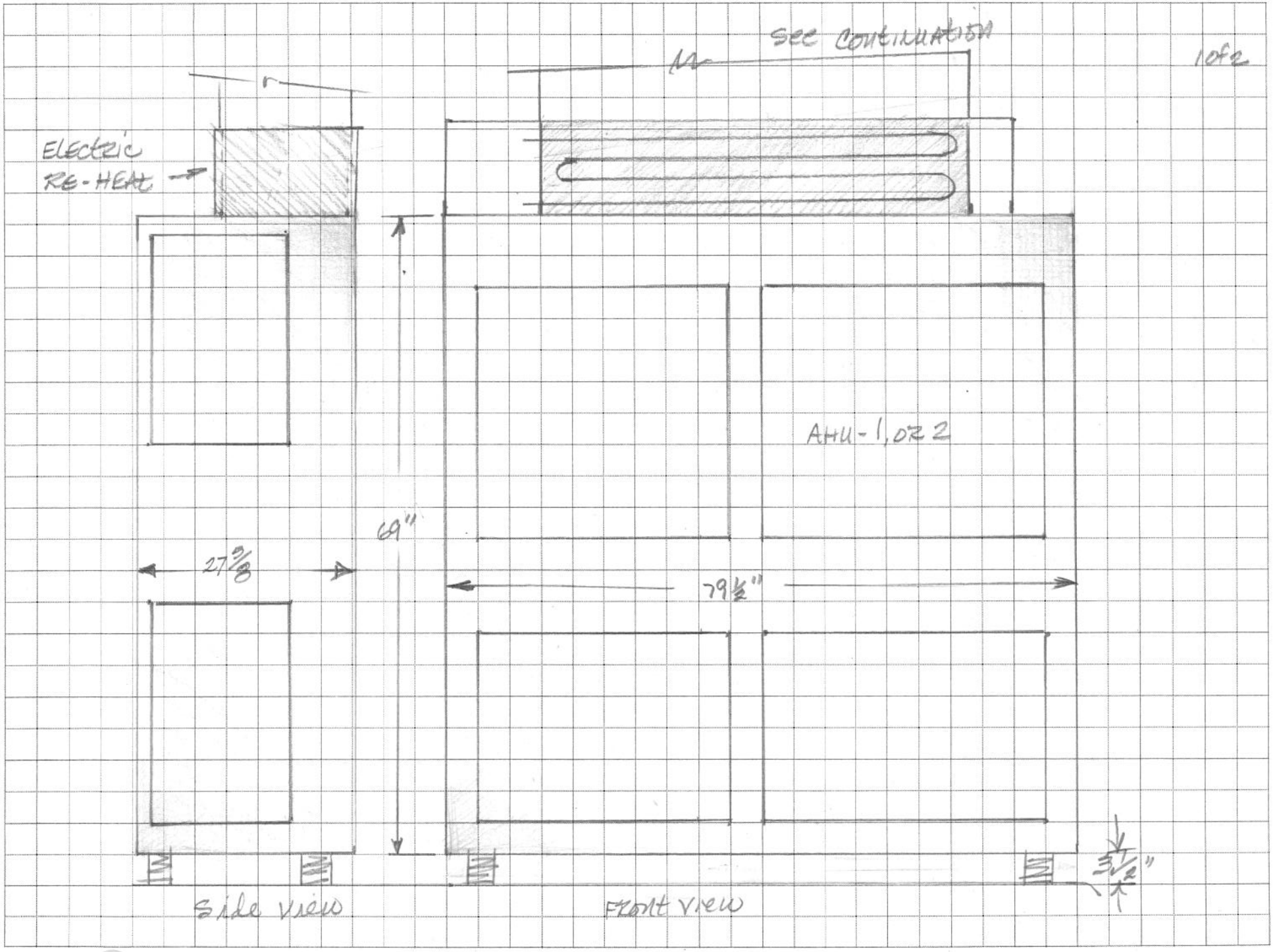
See continuation
ELECTRIC
RE-HEAT
AHU-1, or 2
69"
27 3/8
79 1/2"
3 1/2"
Side view
Front view

AHU-1,2
15 ton unit
20 KW electric
Reheat
6,000 CFM

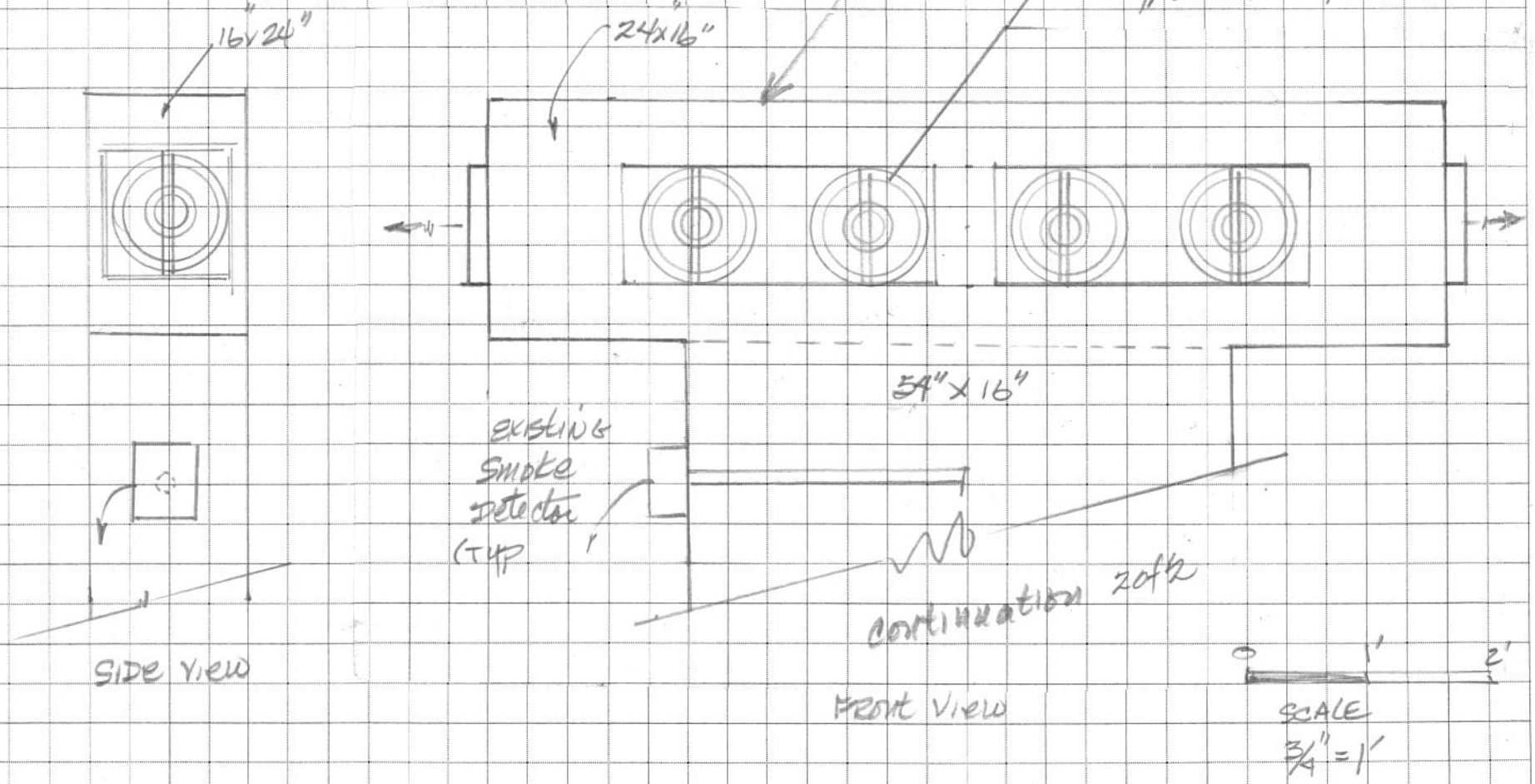

General Data

Table 1. General Data - 7½, 10 Ton Condensing Units

	7½ Tons	10 Tons		
	Single Compressor TTA090A3, A4, AW	**Single Compressor TTA120A3, A4, AW**	**Dual Compressor TTA120B3, B4, BW**	**Modified Compressor TTA120C3, C4, CW**
Cooling Performance(i)				
Gross Cooling Capacity				
Matched Air Handler	92,000	128,000	126,000	126,000
Condensing Unit Only(ii)	92,000	128,000	126,000	126,000
ARI Net Cooling Capacity(iii)	89,000	124,000	122,000	122,000
EER(iv)				
Matched Air Handler	10.3	10.3	10.3	10.3
Condensing Unit Only	11.6	11.3	11.5	11.4
System Integrated Part Load Value(v)	-	-	11.2	12.8
Condensing Unit Only IPLV(v)	-	-	14.0	14.8
System kW/Condensing Unit kW	8.61/7.90	12.11/11.25	11.89/10.94	11.9/11.1
Compressor				
No./Type	1/Trane 3-D™ Scroll	1/Trane 3-D™ Scroll	2/Trane Climatuff™ Scrolls	2/Manifolded Scrolls
No. Motors/HP	1/7.5	1/10	2/5.0	2/5.0
Motor RPM	3450	3450	3450	3450
Sound Rating (dBA)(vi)	86	89	89	89
System Data(vii)				
No. Refrigerant Circuits	1	1	2	1
Suction Line (in.) OD	1 3/8	1 3/8	1 1/8	1 3/8
Liquid Line (in.) OD	1/2	1/2	3/8	1/2
Outdoor Coil - Type	Plate Fin	Plate Fin	Plate Fin	Plate Fin
Tube Size (in.) OD	.375	.375	.375	.375
Face Area (sq ft)	19.25	24.0	24.0	18.4
Rows/FPI	2/18	2/20	2/20	2/20
Outdoor Fan - Type	Propellor	Propellor	Propellor	Propellor
No. Used/Diameter (in.)	1/26	1/28	1/28	1/28
Drive Type/No. Speeds	Direct/1	Direct/1	Direct/1	Direct/1
CFM	5670	8120	8120	8120
No. Motor/HP	1/.50	1/1.00	1/1.00	1/1.00
Motor RPM	1100	1100	1100	1100
Refrigerant Charge (Field Supplied) (lbs of R-22)(viii)	16.00	19.0	21.00	20.50

(i) Cooling Performance is rated at 95° F ambient, 80° F entering dry bulb, 67° F entering wet bulb. Gross capacity does not include the effect of fan motor heat. ARI capacity is net and includes the effect of fan motor heat. Certified in accordance with the Unitary Large Equipment certification program, which is based on ARI Standard 340/360-00 or 365-00.
(ii) Condensing unit only gross cooling capacity rated at 45° F saturated suction temperature and at 95° F ambient.
(iii) ARI net cooling capacity is calculated with matched blower coil and 25 feet of 1 3/8" or 1/2" OD interconnecting tubing.
(iv) EER is rated at ARI conditions and in accordance with DOE test procedures.
(v) Integrated part load value is based on ARI Standard 340/360-00 or 365-00. Units are rated at 80° F ambient, 80° F entering dry bulb (DB), and 67° F entering wet bulb (WB) at ARI rated cfm.
(vi) Sound rating shown is tested in accordance with ARI Standard 270 or 370.
(vii) Refer to refrigerant piping applications manual for line sizing and line length.
(viii) Refrigerant (operating) charge is for condensing unit (all circuits) with matching blower coils and 25 feet of interconnecting refrigerant lines. All units are supplied with a small nitrogen holding charge only.

Table 2. General Data - 12½, 15 and 20 Ton Condensing Units

	12½ Tons	15 Tons		20 Tons	
	Dual Compressor TTA150B3, B4, BW	Dual Compressor TTA180B3, B4, BW	Manifolded Compressor TTA180C3, C4, CW	Dual Compressor TTA240B3, B4, BW	Manifolded Compressor TTA240F3, F4, FW
Cooling Performance(i)					
Gross Cooling Capacity					
Matched Air Handler	148,000	182,000	182,000	246,000	246,000
Condensing Unit Only(ii)	148,000	182,000	182,000	246,000	246,000
ARI Net Cooling Capacity(iii)	144,000	176,000	176,000	238,000	247,000
EER(iv)					
Matched Air Handler	9.8	9.7	9.7	9.7	10.1
Condensing Unit Only	11.0	11.1	11.1	11.1	12.0
System Integrated Part Load Value(v)	11.0	10.9	13.0	10.9	13.0
Condensing Unit Only IPLV(v)	13.7	14.0	15.0	14.0	15.0
System kW/Condensing Unit kW	14.70/13.43	18.18/16.43	18.16/16.35	24.61/22.17	24.36/20.5
Compressor No./Type	2/Trane Climatuff™ Scroll	2/Trane 3-D™ Scroll	2/Trane 3-D™ Scrolls	2/Trane 3-D™ Scrolls	2/Copeland™ Scrolls
No. Motors/HP	2/6.25	2/7.50	2/7.50	2/10.0	2/10.1
Motor RPM	3450	3450	3450	3450	3500
Sound Rating (dBA)(vi)	89	89	89	92	92
System Data(vii)					
No. Refrigerant Circuits	2	2	1	2	1
Suction Line (in.) OD	1 1/8	1 3/8	1 5/8	1 3/8	1 5/8
Liquid Line (in.) OD	3/8	1/2	5/8	1/2	5/8
Outdoor Coil - Type	Plate Fin	Plate Fin	Plate Fin	Plate Fin	Plate Fin
Tube Size (in.) OD	.375	.375	.375	.375	.375
Face Area (sq ft)	24.0	33.3	30.7	50.2	52.9
Rows/FPI	2/18	2/20	2/20	2/18	2/18
Outdoor Fan - Type	Propellor	Propellor	Propellor	Propellor	Propellor
No. Used/Diameter (in.)	1/28	2/26	2/26	2/28	2/28
Drive Type/No. Speeds	Direct/1	Direct/1	Direct/1	Direct/1	Direct/1
CFM	8120	10900	11340	16120	14600
No. Motor/HP	1/1.00	2/.50	2/.50	2/1.00	2/1.00
Motor RPM	1100	1100	1100	1100	1100
Refrigerant Charge (Field Supplied)					
(lbs of R-22)(viii)	23.6	30.0	28.00	40.0	-
(lbs of R-410A)(viii)	-	-	-	-	41.3

(i) Cooling Performance is rated at 95° F ambient, 80° F entering dry bulb, 67° F entering wet bulb. Gross capacity does not include the effect of fan motor heat. ARI capacity is net and includes the effect of fan motor heat. Certified in accordance with the Unitary Large Equipment certification program, which is based on ARI Standard 340/360-00 or 365-00.
(ii) Condensing unit only gross cooling capacity rated at 45° F saturated suction temperature and at 95° F ambient.
(iii) ARI net cooling capacity is calculated with matched blower coil and 25 feet of 1 3/8" or 1/2" OD (1 5/8" and 5/8" on TTA240F) interconnecting tubing.
(iv) EER is rated at ARI conditions and in accordance with DOE test procedures.
(v) Integrated part load value is based on ARI Standard 340/360-00 or 365-00. Units are rated at 80° F ambient, 80° F entering dry bulb (DB), and 67° F entering wet bulb (WB) at ARI rated cfm.
(vi) Sound rating shown is tested in accordance with ARI Standard 270.
(vii) Refer to refrigerant piping applications manual for line sizing and line length.
(viii) Refrigerant (operating) charge is for condensing unit (all circuits) with matching blower coils and 25 feet of interconnecting refrigerant lines. All units are supplied with a small nitrogen holding charge only.

Table 30. Evaporator Fan Performance 7½ Tons TWE090A, TWE090B - Air Handler

	External Static Pressure (Inches of Water Gauge)																			
	.10"		.20"		.30"		.40"		.50"		.60"		.70"		.80"		.90"		1.00"	
CFM	RPM	BHP	RPM	BHP	RPM	BHP	RPM	BHP	RPM	BHP	RPM	BHP	RPM	BHP	RPM	BHP	RPM	BHP	RPM	BHP
	1.5 HP Standard Motor and Field Supplied Low Static Drive(i)				1.5 HP Standard Motor and Low Static Drive Kit										1.5 HP Standard Motor and Sheaves					
2400	429	0.45	475	0.51	522	0.58	569	0.65	615	0.71	662	0.78	708	0.84	755	0.91	783	0.98	811	1.05
2550	453	0.48	496	0.55	539	0.61	582	0.68	626	0.74	669	0.81	712	0.87	756	0.94	785	1	814	1.08
2700	476	0.52	516	0.58	556	0.65	596	0.71	636	0.77	676	0.83	716	0.9	758	0.96	787	1.02	816	1.11
2850	500	0.55	537	0.62	573	0.68	610	0.74	646	0.8	683	0.86	720	0.92	759	0.99	788	1.05	819	1.14
3000	524	0.59	557	0.65	590	0.71	624	0.77	657	0.83	690	0.89	723	0.95	760	1.01	790	1.07	821	1.17
3150	546	0.62	577	0.68	609	0.75	640	0.81	672	0.87	703	0.94	735	1.00	768	1.07	798	1.15	829	1.25
3300	568	0.65	598	0.72	628	0.79	657	0.85	687	0.92	717	0.99	746	1.05	776	1.12	807	1.22	837	1.33
3450	589	0.67	618	0.75	647	0.83	676	0.91	705	0.99	733	1.07	762	1.15	791	1.23	820	1.33	849	1.42
3600	611	0.69	639	0.79	666	0.88	694	0.97	722	1.06	750	1.16	778	1.25	806	1.34	834	1.43	862	1.51

	External Static Pressure (Inches of Water Gauge)															
	1.10"		1.20"		1.30"		1.40"		1.50"		1.60"		1.70"		1.80"	
CFM	RPM	BHP	RPM	BHP	RPM	BHP	RPM	BHP	RPM	BHP	RPM	BHP	RPM	BHP	RPM	BHP
	1.5 HP Standard Motor and Sheaves															
2400	840	1.11	868	1.18	896	1.25	924	1.32	952	1.39	890	1.46	1009	1.52	1037	1.59
2550	843	1.15	872	1.23	901	1.31	930	1.38	959	1.46	988	1.54	1016	1.61	1045	1.69
2700	846	1.19	876	1.28	905	1.36	935	1.45	965	1.53	995	1.62	1024	1.7	1054	1.79
2850	849	1.23	880	1.33	910	1.42	941	1.51	971	1.6	1002	1.7	1032	1.79	1063	1.88
3000	853	1.27	884	1.37	915	1.48	946	1.58	978	1.68	1009	1.78	1040	1.88	1071	1.98
3150	860	1.35	891	1.45	922	1.56	958	1.66	984	1.76	1014	1.86	1044	1.94	—	—
3300	868	1.43	898	1.54	929	1.64	959	1.74	990	1.85	1020	1.95	1049	2.01	—	—
3450	879	1.52	908	1.61	937	1.71	966	1.8	995	1.9	1025	2.00	—	—	—	—
3600	890	1.6	918	1.69	945	1.78	973	1.87	1001	1.96	—	—	—	—	—	—
	2 HP Oversized Motor and Sheaves															

Notes:

1. Data includes pressure drop due to wet coil and 1" filter.
2. Fan motor heat (MBh) = 3.15 x BHP.
3. Trane's factory supplied motors, in commercial equipment, are definite purpose motors, specifically designed and tested to operate reliably and
4. continuously at all cataloged conditions. Using the full horsepower range of our fan motors as shown in our tabular data will not result in nuisance tripping or premature motor failure. Our product's warranty will not be affected.

(i) Field Supplied Low Static Drive (use Table 31)

Table 31. Low Static Fan Drive 7½ Tons TWE090A, B Air Handler

Field Supplied Low Static Fan Drive 7½ Tons TWE090A, B Air Handler(i)	
Motor Sheave Turns Open	Nominal RPM
0	598
1	563
2	528
3	493
4	458
5	422

Low Static Fan Drive Accessory Kit 7½ Tons TWE090A, B Air Handler	
Motor Sheave Turns Open	Nominal RPM
0	733
1	690
2	647
3	604
4	561
5	518

(i) Field supplied components required:
Blower Sheave: Fixed Pitch (9.8 inch Pitch Diameter), Blower Sheave: 1.00 inch Bore, Single Groove, "A" Belt. Belt: A55

Table 36. Evaporator Fan Performance 15 Tons TWE180B - Air Handler

	External Static Pressure (Inches of Water Gauge)																					
	.10"		.20"		.30"		.40"		.50"		.60"		.70"		.80"		.90"		1.00"		1.20	
CFM	RPM	BHP	RPM	BHP	RPM	BHP	RPM	BHP	RPM	BHP	RPM	BHP	RPM	BHP	RPM	BHP	RPM	BHP	RPM	BHP	RPM	BHP
	3 HP Standard Motor and Field Supplied Low Static Drive[i]																3 HP Standard Motor and Sheaves					
4500	637	1.4	662	1.44	687	1.49	701	1.53	717	1.58	732	1.63	747	1.64	754	1.65	782	1.67	817	1.76	873	1.96
4800	642	1.42	667	1.51	692	1.54	706	1.63	722	1.64	737	1.65	752	1.66	767	1.68	795	1.73	831	1.82	887	2.02
5100	647	1.45	672	1.52	697	1.57	713	1.66	726	1.68	740	1.70	761	1.72	783	1.77	811	1.85	843	1.96	900	2.19
5400	652	1.47	677	1.54	702	1.6	719	1.69	730	1.72	742	1.75	769	1.78	798	1.87	827	1.98	856	2.09	914	2.37
5700	653	1.48	679	1.56	706	1.67	725	1.75	741	1.80	758	1.84	786	1.92	815	2.02	843	2.14	872	2.27	932	2.57
6000	655	1.49	681	1.59	709	1.74	731	1.8	752	1.87	774	1.94	803	2.05	831	2.17	860	2.29	889	2.44	950	2.78
6300	658	1.51	687	1.63	716	1.79	741	1.89	765	1.98	792	2.09	823	2.22	853	2.35	883	2.49	913	2.64	974	2.96
6600	663	1.54	693	1.68	723	1.84	750	1.97	778	2.09	811	2.24	843	2.39	875	2.53	906	2.69	936	2.84	997	3.15
6900	670	1.62	700	1.77	735	1.98	767	2.15	799	2.29	832	2.44	865	2.61	900	2.79	934	2.98	967	3.16	1019	3.48
7200	677	1.7	707	1.86	747	2.12	785	2.33	819	2.49	853	2.65	888	2.83	926	3.05	963	3.27	997	3.49	1041	3.81
																	5 HP Oversized Motor and Sheaves					

	External Static Pressure (Inches of Water Gauge)											
	1.40"		1.60"		1.80"		2.00"		2.20"		2.40"	
CFM	RPM	BHP	RPM	BHP	RPM	BHP	RPM	BHP	RPM	BHP	RPM	BHP
	3 HP Standard Motor and Sheaves		5 HP Oversized Motor and Sheaves									
4500	929	2.19	986	2.46	1035	2.74	1084	3.01	1132	3.28	-	-
4800	943	2.29	999	2.56	1046	2.83	1095	3.11	1143	3.38	-	-
5100	957	2.48	1012	2.76	1058	3.04	1105	3.31	1152	3.57	-	-
5400	972	2.67	1024	2.96	1070	3.24	1116	3.51	-	-	-	-
5700	990	2.89	1038	3.18	1083	3.46	1127	3.74	-	-	-	-
6000	1008	3.11	1052	3.39	1096	3.68	1138	3.96	-	-	-	-
6300	1025	3.3	1069	3.61	1113	3.92	1152	4.21	-	-	-	-
6600	1042	3.49	1087	3.83	1130	4.16	-	-	-	-	-	-
6900	1063	3.81	1107	4.15	1146	4.49	-	-	-	-	-	-
7200	1085	4.14	1127	4.47	-	-	-	-	-	-	-	-

Notes:

1. Data includes pressure drop due to wet coil and 2" filter.
2. Fan motor heat (MBh) = 3.15 x BHP.
3. Trane's factory supplied motors, in commercial equipment, are definite purpose motors, specifically designed and tested to operate reliably and continuously at all cataloged conditions. Using the full horsepower range of our fan motors as shown in our tabular data will not result in nuisance tripping or premature motor failure. Our product's warranty will not be affected.

(i) Field Supplied Low Static Drive (use Table 37)

Table 37. Field Supplied Low Static Fan Drive 15 Tons TWE180 Air Handler[i]

Motor Sheave Turns Open	Nominal RPM
0	776
1	748
2	720
3	692
4	663
5	635
6	607

(i) Field supplied components required:
Motor Sheave: Variable Pitch (4.3-5.5 Inch Pitch Diameter), 0.875 inch Bore, Single Groove, "B" Belt.
Blower Sheave: Fixed Pitch (12.4 inch Pitch Diameter), 1.4375 inch Bore, Single Groove, "B" Belt
Belt: B67

Performance Data

Table 4. Gross Cooling Capacities (MBh) 7½ Tons TTA090A Condensing Unit with 7½ Tons TWE090A Air Handler

		Ambient Temperature																											
		85						95						105						115					
Air	Ent	Entering Wet Bulb																							
Flow	DB	61		67		73		61		67		73		61		67		73		61		67		73	
CFM	(°F)	MBH	SHC	MBH	SHC	MBH	SHC	MBH	SHC	MBH	SHC	MBH	SHC	MBH	SHC	MBH	SHC	MBH	SHC	MBH	SHC	MBH	SHC	MBH	SHC
2700	75	85	66.9	93.8	56.6	103.2	38.1	81.8	65.3	90.3	55.2	99.3	36.8	78.3	63.5	86.4	53.6	95.2	35.3	74.5	61.7	82.3	52	90.7	33.8
	80	85.4	77.9	94.1	64.4	103.2	49.8	82.3	76.4	90.5	62.9	99.4	48.3	78.9	74.7	86.7	61.2	95.2	46.8	75.3	72.8	82.5	59.3	90.8	45.1
	85	87.1	87.1	94.2	75.3	103.4	61.2	84.5	84.5	90.7	73.7	99.6	59.7	81.6	81.6	86.8	72	95.4	58.2	78.4	78.4	82.7	70.2	91	56.5
	90	91.5	91.5	94.6	86.4	103.6	72.5	88.8	88.8	91.3	84.9	99.6	70.9	85.8	85.8	87.6	83.2	95.5	69.3	82.5	82.5	83.7	81.5	91.1	67.5
3000	75	86.7	69.9	95.5	54.9	104.9	38.8	83.3	68.3	91.9	53.3	100.9	37.5	79.7	66.5	87.9	51.7	96.6	35.9	75.8	64.6	83.6	49.9	92	34.3
	80	87.3	82	95.7	67.2	104.9	51.4	84.1	80.4	92	65.5	100.9	49.9	80.6	78.7	88	63.8	96.7	48.3	77	76.9	83.8	61.9	92.1	46.7
	85	89.9	89.9	95.9	79	105.1	63.8	87.2	87.2	92.2	77.4	101.1	62.3	84.1	84.1	88.3	75.7	96.9	60.8	80.8	80.8	84.2	73.9	92.4	59.1
	90	94.5	94.5	96.6	91.2	105.2	75.9	91.6	91.6	93.1	89.7	101.2	74.3	88.4	88.4	89.4	88.0	97.0	72.7	85.0	85.0	85.1	85.1	92.5	70.9
3300	75	88.1	72.7	96.9	56.6	106.2	39.5	84.6	71.1	93.1	55.1	102.1	38	80.9	69.3	89.1	53.4	97.7	36.4	76.9	67.4	84.7	51.7	93	34.7
	80	88.9	85.9	97	69.7	106.3	52.9	85.7	84.3	93.3	68.1	102.2	51.4	81.8	81.8	89.2	66.3	97.9	49.8	78.4	78.4	84.9	64.5	93.2	48.2
	85	92.4	92.4	97.3	82.6	106.5	66.3	89.5	89.5	93.6	81	102.4	64.8	86.3	86.3	89.6	79.3	98.1	63.2	82.8	82.8	85.4	77.4	93.3	61.3
	90	97.0	97.0	98.4	95.9	106.6	79.2	94.0	94.0	94.9	94.3	102.6	77.6	90.8	90.8	90.8	90.8	98.2	75.9	87.2	87.2	87.3	87.3	93.6	74.2
3600	75	89.2	75.5	98.0	58.3	107.4	40.0	85.8	73.8	94.2	56.7	103.2	38.5	82.0	72.0	90.1	55.1	98.7	36.9	77.9	70.0	85.6	53.3	93.9	35.2
	80	90.5	89.7	98.2	72.2	107.5	54.3	86.8	86.8	94.4	70.5	103.3	52.8	83.6	83.6	90.3	68.8	98.9	51.2	80.1	80.1	85.9	66.9	94.2	49.6
	85	94.5	94.5	98.5	86.0	107.7	68.6	91.5	91.5	94.8	84.4	103.5	67.2	88.2	88.2	90.8	82.7	99.0	65.3	84.6	84.6	86.5	80.8	94.3	63.5
	90	99.3	99.3	99.3	99.3	107.8	82.4	96.2	96.2	96.3	96.3	103.7	80.8	92.8	92.8	92.9	92.9	99.3	79.1	89.2	89.2	89.2	89.2	94.6	77.3

Notes:
1. Equal MBH and SHC values constitute dry coil condition. Total Gross Cooling Capacity (MBh) shown to the left is not applicable. In this case the Sensible Heat Capacity (SHC) is the total capacity.
2. All capacities shown are gross and have not considered indoor fan heat.
3. To obtain net cooling capacities, subtract indoor fan heat.
4. MBH = Total Gross Cooling Capacity
5. SHC = Sensible Heat Capacity

Table 5. Gross Cooling Capacities (MBh) 7 1/2 Tons TTA090A Condensing Unit with 10 Tons TWE120A Air Handler

		Ambient Temperature																							
		85						95						105						115					
Air	Ent	Entering Wet Bulb																							
Flow	DB	61		67		73		61		67		73		61		67		73		61		67		73	
CFM	(°F)	MBH	SHC	MBH	SHC	MBH	SHC	MBH	SHC	MBH	SHC	MBH	SHC	MBH	SHC	MBH	SHC	MBH	SHC	MBH	SHC	MBH	SHC	MBH	SHC
3100	75	90.8	73.8	99.9	61.9	109.7	40.7	87.4	72.1	96.2	60.4	105.6	39.3	83.4	70.2	92.1	58.8	101.2	37.8	79.2	68.2	87.7	57.1	96.5	36.2
	80	91.4	86.7	100.2	70.8	109.7	54	88.1	85.1	96.4	69.3	105.7	52.5	84.4	83.3	92.3	67.4	101.4	50.9	80.3	80.3	87.9	65.5	96.7	49.2
	85	94.5	94.5	100.3	83.5	109.9	67.2	91.6	91.6	96.6	81.9	105.9	65.7	88.4	88.4	92.5	80.1	101.6	64.1	84.9	84.9	88.2	78.3	97	62.4
	90	99.2	99.2	101	96.5	110.1	80.3	96.2	96.2	97.5	95	106	78.6	92.9	92.9	93.6	93.3	101.7	76.9	89.4	89.4	89.6	89.6	97.1	75.1
3400	75	92.2	76.8	101.4	59.5	111.1	41.3	88.7	75.1	97.6	58	106.9	39.8	84.7	73.2	93.4	56.3	102.4	38.2	80.4	71.2	88.9	54.5	97.6	36.5
	80	93.1	90.9	101.6	73.7	111.2	55.6	89.7	89.3	97.7	71.9	107.1	54.1	85.9	85.9	93.5	70.1	102.6	52.5	82.3	82.3	89.1	68.2	97.9	50.8
	85	97.0	97.0	101.7	87.3	111.4	69.8	94.0	94.0	98.0	85.7	107.2	68.3	90.7	90.7	93.9	83.9	102.9	66.7	87.1	87.1	89.5	82.0	98.1	65.1
	90	101.8	101.8	102.8	101.5	111.4	83.6	98.8	98.8	98.9	98.9	107.3	82.1	95.4	95.4	95.5	95.5	103	80.4	91.8	91.8	91.9	91.9	98.3	78.6
3700	75	93.4	79.8	102.6	61.3	112.2	41.8	89.8	78	98.7	59.7	108	40.3	85.8	76.1	94.4	58	103.4	38.7	81.5	74.1	89.9	56.2	98.5	37
	80	94.2	94.2	102.7	76.2	112.4	57.1	91.2	91.2	98.8	74.5	108.2	55.6	87.8	87.8	94.6	72.7	103.7	54	84.2	84.2	90.1	70.8	98.9	52.3
	85	99.2	99.2	103	91.0	112.6	72.3	96.1	96.1	99.2	89.4	108.4	70.8	92.7	92.7	95.1	87.6	103.9	69.3	89.0	89.0	90.7	85.7	99.0	67.2
	90	104.2	104.2	104.3	104.3	112.7	87.0	101	101	101.1	101.1	108.5	85.4	97.6	97.6	97.6	97.6	104	83.8	93.8	93.8	93.9	93.9	99.3	82.0
4000	75	94.5	82.6	103.6	63	113.2	42.3	90.8	80.8	99.7	61.4	108.9	40.7	86.8	78.9	95.3	59.7	104.2	39.2	82.5	76.9	90.7	57.9	99.3	37.5
	80	96.1	96.1	103.8	78.7	113.4	58.5	93.0	93.0	99.8	77.1	109.1	57.0	89.5	89.5	95.5	75.3	104.6	55.5	85.8	85.8	90.9	73.3	99.7	53.8
	85	101.2	101.2	104.2	94.5	113.6	74.8	98.0	98.0	100.4	92.9	109.2	73.0	94.5	94.5	96.2	91.1	104.7	71.3	90.7	90.7	91.8	89.3	99.9	69.5
	90	106.3	106.3	106.4	106.4	113.7	90.3	103.0	103.0	103.1	103.1	109.4	88.7	99.5	99.5	99.6	99.6	105	87.0	95.6	95.6	95.7	95.7	100.2	85.3

Notes:
1. Equal MBH and SHC values constitute dry coil condition. Total Gross Cooling Capacity (MBh) shown to the left is not applicable. In this case the Sensible Heat Capacity (SHC) is the total capacity.
2. All capacities shown are gross and have not considered indoor fan heat.
3. To obtain net cooling capacities, subtract indoor fan heat.
4. MBH = Total Gross Cooling Capacity
5. SHC = Sensible Heat Capacity

Table 10. Gross Cooling Capacities (MBh) 12½ Tons TTA150B Condensing Unit with 15 Tons TWE180B Air Handler

		Ambient Temperature																							
		85						95						105						115					
Air	Ent	Entering Wet Bulb																							
Flow	DB	61		67		73		61		67		73		61		67		73		61		67		73	
CFM	(°F)	MBH	SHC	MBH	SHC	MBH	SHC	MBH	SHC	MBH	SHC	MBH	SHC	MBH	SHC	MBH	SHC	MBH	SHC	MBH	SHC	MBH	SHC	MBH	SHC
4500	75	137.6	109.2	151.2	92.0	165.6	61.5	132.5	106.7	145.7	89.8	159.5	59.4	127.1	103.9	139.8	87.4	152.9	57.1	121.2	101.0	133.6	84.9	146.0	54.8
	80	138.3	127.6	151.5	104.9	166.0	81.0	133.3	125.1	146.0	102.4	160.1	78.8	128.1	122.5	140.2	99.8	153.7	76.4	122.5	119.6	134.1	97.0	147.1	74.0
	85	141.8	141.8	152.1	123.2	166.6	100.2	137.5	137.5	146.6	120.7	160.7	97.9	133.0	133.0	140.8	118.0	154.4	95.6	128.2	128.2	134.7	115.3	147.5	92.6
	90	148.8	148.8	152.9	141.7	166.9	118.3	144.5	144.5	147.6	139.3	161.0	115.9	139.8	139.8	142.0	136.7	154.8	113.4	134.9	134.9	136.2	134.1	148.3	110.8
5000	75	140.2	114.2	153.8	89.5	168.0	62.5	134.9	111.6	148.1	87.2	161.7	60.3	129.4	108.8	142.0	84.7	155.0	58.1	123.3	105.8	135.7	82.1	148.0	55.6
	80	141.2	134.4	154.2	109.4	168.7	83.7	136.1	131.8	148.5	106.9	162.5	81.5	130.8	129.2	142.5	104.2	156.1	79.1	125.0	125.0	136.3	101.4	149.2	76.7
	85	146.2	146.2	154.8	129.4	169.3	104.6	141.8	141.8	149.1	126.8	162.8	101.7	137.0	137.0	143.2	124.1	156.4	99.2	132.0	132.0	137.0	121.4	149.7	96.5
	90	153.5	153.5	155.9	149.7	169.6	124.1	149.0	149.0	150.6	147.3	163.6	121.6	144.1	144.1	145.0	144.7	157.2	119.1	139.0	139.0	139.2	139.2	150.5	116.4
5500	75	142.3	118.9	155.9	92.5	170.0	63.6	136.9	116.2	150.1	90.1	163.5	61.3	131.2	113.4	143.9	87.6	156.7	58.9	125.2	110.4	137.0	84.2	149.5	56.4
	80	143.8	140.9	156.4	113.7	170.8	86.3	138.7	138.3	150.6	111.1	164.6	84.0	133.2	133.2	144.5	108.4	157.9	81.6	128.1	128.1	138.1	105.5	151.0	79.2
	85	150.1	150.1	157.0	135.3	171.2	108.0	145.5	145.5	151.3	132.7	164.9	105.6	140.5	140.5	145.2	130.0	158.4	103.0	135.3	135.3	139.0	127.3	151.6	100.2
	90	157.6	157.6	158.8	157.4	171.9	129.6	152.9	152.9	153.0	153.0	165.7	127.1	147.9	147.9	148.0	148.0	159.2	124.5	142.6	142.6	142.7	142.7	152.4	121.8
6000	75	144.2	123.4	157.7	95.3	171.6	64.4	138.7	120.7	151.4	92.3	165.1	62.1	132.9	117.8	145.1	89.5	158.1	59.7	126.8	114.8	138.5	86.6	150.8	57.2
	80	145.8	145.8	158.3	117.8	172.7	88.7	141.1	141.1	152.4	115.2	166.3	86.4	136.1	136.1	146.1	112.4	159.5	84.1	130.9	130.9	139.7	109.5	152.4	81.6
	85	153.5	153.5	159.0	141.0	173.1	111.7	148.7	148.7	153.2	138.4	166.8	109.2	143.6	143.6	147.1	135.7	160.1	106.6	138.3	138.3	140.8	132.9	153.2	103.8
	90	161.3	161.3	161.4	161.4	173.9	134.8	156.4	156.4	156.5	156.5	167.5	132.4	151.2	151.2	151.3	151.3	160.9	129.8	145.7	145.7	145.9	145.9	154.0	127.0

Notes:
1. Equal MBH and SHC values constitute dry coil condition. Total Gross Cooling Capacity (MBh) shown to the left is not applicable. In this case the Sensible Heat Capacity (SHC) is the total capacity.
2. All capacities shown are gross and have not considered indoor fan heat.
3. To obtain net cooling capacities, subtract indoor fan heat.
4. MBH = Total Gross Cooling Capacity
5. SHC = Sensible Heat Capacity

Table 11. Gross Cooling Capacities (MBh) 15 Tons TTA180B Condensing Unit with 15 Tons TWE180B Air Handler

		Ambient Temperature																							
		85						95						105						115					
Air	Ent	Entering Wet Bulb																							
Flow	DB	61		67		73		61		67		73		61		67		73		61		67		73	
CFM	(°F)	MBH	SHC	MBH	SHC	MBH	SHC	MBH	SHC	MBH	SHC	MBH	SHC	MBH	SHC	MBH	SHC	MBH	SHC	MBH	SHC	MBH	SHC	MBH	SHC
5400	75	168.8	132.7	186.2	112.4	204.7	75.9	162.4	129.4	179.0	109.5	196.7	73.1	155.3	125.8	171.2	106.4	187.9	70.1	147.7	121.9	162.9	103.1	178.5	66.9
	80	169.8	154.7	186.5	127.9	205.2	99.4	163.5	151.4	179.4	124.6	197.4	96.4	156.6	147.9	171.7	121.1	188.9	93.3	149.3	144.2	163.5	117.3	179.9	90.0
	85	173.3	173.3	187.4	149.7	206.0	122.3	167.9	167.9	180.4	146.4	198.2	119.4	162.0	162.0	172.7	142.9	189.8	116.2	155.6	155.6	164.5	139.2	180.9	112.9
	90	182.1	182.1	188.4	171.8	206.3	144.2	176.6	176.6	181.5	168.6	198.6	141.0	170.5	170.5	174.1	165.1	190.3	137.6	164.0	164.0	166.3	161.5	181.5	134.0
6000	75	172.2	138.6	189.6	109.4	207.9	77.2	165.5	135.2	182.1	106.3	199.5	74.3	158.2	131.5	174.1	103.0	190.5	71.2	150.3	127.6	165.5	99.5	180.9	67.9
	80	173.4	162.7	190.0	133.3	208.7	102.7	167.0	159.4	182.7	129.9	200.6	99.7	160.0	155.8	174.8	126.3	191.8	96.5	152.6	152.0	166.3	122.5	182.6	93.1
	85	178.9	178.9	191.0	157.1	209.5	127.6	173.3	173.3	183.6	153.7	201.4	124.6	167.1	167.1	175.7	150.1	192.3	120.6	160.4	160.4	167.3	146.3	183.2	116.9
	90	188.1	188.1	192.4	181.3	209.9	151.0	182.3	182.3	185.4	178.0	202.0	147.8	176.0	176.0	177.9	174.6	193.4	144.3	169.1	169.1	169.3	169.3	184.3	140.6
6600	75	175.0	144.2	192.4	113.0	210.4	78.6	168.1	140.7	184.7	109.8	201.9	75.6	160.6	137.0	176.5	106.5	192.7	72.3	152.5	133.0	167.0	102.0	182.9	68.9
	80	176.7	170.4	193.0	138.4	211.5	105.7	170.1	167.0	185.4	135.0	203.2	102.7	162.3	162.3	177.3	131.3	194.2	99.5	155.6	155.6	168.6	127.4	184.8	96.1
	85	183.8	183.8	193.9	164.1	211.8	131.9	177.9	177.9	186.4	160.7	203.6	128.6	171.5	171.5	178.3	157.1	194.9	125.1	164.5	164.5	169.8	153.2	185.6	121.3
	90	193.3	193.3	196.0	190.4	213.0	157.5	187.3	187.3	188.9	187.1	204.8	154.2	180.6	180.6	180.8	180.8	196.0	150.7	173.5	173.5	173.7	173.7	186.7	147.0
7200	75	177.4	149.5	194.7	116.3	212.6	79.6	170.3	146.0	186.9	113.2	203.9	76.5	162.6	142.2	177.9	108.9	194.5	73.3	154.5	138.2	169.0	104.9	184.5	69.8
	80	179.7	177.7	195.5	143.2	213.9	108.6	172.5	172.5	187.8	139.8	205.4	105.6	166.0	166.0	179.5	136.1	196.3	102.3	159.0	159.0	170.6	132.1	186.6	99.0
	85	188.2	188.2	196.4	170.8	214.4	136.3	182.0	182.0	188.8	167.4	206.0	133.0	175.3	175.3	180.7	163.7	197.1	129.4	168.1	168.1	172.1	159.9	187.6	125.6
	90	198.0	198.0	199.4	199.2	215.7	163.8	191.7	191.7	191.8	191.8	207.1	160.4	184.8	184.8	185.0	185.0	198.2	156.9	177.4	177.4	177.6	177.6	188.8	153.1

Notes:
1. Equal MBH and SHC values constitute dry coil condition. Total Gross Cooling Capacity (MBh) shown to the left is not applicable. In this case the Sensible Heat Capacity (SHC) is the total capacity.
2. All capacities shown are gross and have not considered indoor fan heat.
3. To obtain net cooling capacities, subtract indoor fan heat.
4. MBH = Total Gross Cooling Capacity
5. SHC = Sensible Heat Capacity

Table 54. Unit Wiring with Electric Heat (Single Point Connection) - 5, 7½ and 10 Ton Air Handlers

Heater Model No.	Maximum Fuse Heater KW Rating(i)	To Use With Unit	Unit Power Supply	Control Stages	Minimum Circuit Ampacity(ii)	Maximum Fuse or HACR Circuit Breaker Size(ii), (iii)
BAYHTRL106A	4.33/5.76			1	33/37	35/40
BAYHTRL112A	8.65/11.52	TWE060A1	208-230/1/60	1	59/67	60/70
BAYHTRL117A	12.98/17.28	TWE060B1		1	88/97	90/100
BAYHTRL123A	17.30/23.04			2	111/127(iv)	125/150
BAYHTRL106A	4.33/5.76			1	34/38	35/40
BAYHTRL112A	8.65/11.52			1	60/68(iv)	60/70
BAYHTRL117A	12.98/17.28	TWE090A1	208-230/1/60	1	86/98	90/100
BAYHTRL123A	17.30/23.04	TWE090B1		2	112/128(iv)	125/150
BAYHTRL129A	21.65/28.80			2	138/158(iv)	150/175
BAYHTRL106A	4.33/5.76			1	31/41	40/45
BAYHTRL112A	8.65/11.52			1	63/73(iv)	70/80
BAYHTRL117A	12.98/17.28	TWE120A1	208-230/1/60	1	89/101	90/110
BAYHTRL123A	17.30/23.08	TWE120B1		2	115/131(iv)	125/150
BAYHTRL129A	21.65/28.80			2	141/161(iv)	150/175
BAYHTRL305A	3.75/5.00			1	17/19	20/20
BAYHTRL310A	7.45/9.96	TWE060A3	208-230/3/60	1	30/34	30/35
BAYHTRL315A	11.25/14.96	TWE060B3		1	43/49	45/50
BAYHTRL325A	18.71/24.92			2	69/79(iv)	70/80
BAYHTRL305A	3.75/5.00			1	20/22	20/25
BAYHTRL310A	7.45/9.96			1	33/37	35/40
BAYHTRL315A	11.25/14.96	TWE090A3	208-230/3/60	1	46/52	50/60
BAYHTRL325A	18.71/24.92	TWE090B3		2	72/82(iv)	80/90
BAYHTRL335A	26.20/34.88			2	97/112(v)	100/125
BAYHTRL305A	3.75/5.00			1	21/23	25/25
BAYHTRL310A	7.45/9.96			1	34/38	35/40
BAYHTRL315A	11.25/14.96	TWE120A3	208-230/3/60	1	47/53	50/60
BAYHTRL325A	18.71/24.92	TWE120B3		2	73/83(iv)	80/90
BAYHTRL335A	26.20/34.88			2	98/1134(v)	100/125
BAYHTRL405A	5			1	10	15
BAYHTRL410A	9.96	TWE060A4	460/3/60	1	17	20
BAYHTRL415A	14.96	TWE060B4		1	25	25
BAYHTRL425A	24.92			2	40	40
BAYHTRL405A	5			1	11	15
BAYHTRL410A	9.96			1	19	20
BAYHTRL415A	14.96	TWE090A3(vi)	460/3/60	1	26	30
BAYHTRL425A	24.92	TWE090B3(vi)		2	41	45
BAYHTRL435A	34.88			2	56	60
BAYHTRL405A	5			1	12	15
BAYHTRL410A	9.96			1	20	20
BAYHTRL415A	14.96	TWE120A3(vi)	460/3/60	1	27	30
BAYHTRL425A	24.92	TWE120B3(vi)		2	42	45
BAYHTRL435A	34.88			2	57	60
BAYHTRLW05A	5			1	8	15
BAYHTRLW10A	9.96			1	15	15
BAYHTRLW15A	14.96	TWE060AW	575/3/60	1	21	25
BAYHTRLW25A	24.92			2	33	35

Table 54. Unit Wiring with Electric Heat (Single Point Connection) - 5, 7½ and 10 Ton Air Handlers

Heater Model No.	Maximum Fuse Heater KW Rating(i)	To Use With Unit	Unit Power Supply	Control Stages	Minimum Circuit Ampacity(ii)	Maximum Fuse or HACR Circuit Breaker Size(ii), (iii)
BAYHTRLW05A	5			1	11	15
BAYHTRLW10A	9.96			1	17	20
BAYHTRLW15A	14.96	TWE090AW	575/3/60	1	23	25
BAYHTRLW25A	24.92			2	36	40
BAYHTRLW35A	34.88			2	48	50
BAYHTRLW05A	5			1	10	15
BAYHTRLW10A	9.96			1	16	20
BAYHTRLW15A	14.96	TWE120AW	575/3/60	1	22	25
BAYHTRLW25A	24.92	TWE120BW		2	35	35
BAYHTRLW35A	34.88			2	47	50

(i) kW ratings are at: 208/240V for 208-230V air handlers.
480V for 460V air handlers
600V for 575V air handlers
For other than rated voltage, capacity = (Voltage/Rated Voltage)2 x Rated Capacity.
(ii) Any power supply and circuits must be wired and protected in accordance with local codes.
(iii) The HACR circuit breaker is for U.S.A. installations only.
(iv) Field wire must be rated at least 75 C.
(v) Field wire must be rated at least 90 C.
(vi) With motor field converted to 460V.

Table 55. Unit Wiring with Electric Heat (Single Point Connection) - 15 and 20 Ton Air Handlers

Heater Model No.	Heater KW Rating(i)	To Use With Unit	Unit Power Supply	Control Stages	Minimum Circuit Ampacity(ii)	Maximum Fuse or HACR Circuit Breaker Size(ii)(iii)
BAYHTRM310A	7.50/10.00			1	38/42	40/45
BAYHTRM320A	14.96/19.92			1	64/72	70/80
BAYHTRM330A	22.50/29.92	TWE180B3	208-230/3/60	2	90/102	90/110
BAYHTRM350A	37.42/49.84			2	142/162(iv)	150/175
BAYHTRM310A	7.50/10.00			1	45/49	50/50
BAYHTRM320A	14.96/19.92			1	71/79	80/80
BAYHTRM330A	22.50/29.92	TWE240B3, E3	208-230/3/60	2	97/109	100/110
BAYHTRM350A	37.42/49.84			2	144/169(iv)	150/175
BAYHTRM410A	10			1	21	25
BAYHTRM420A	19.92			1	36	40
BAYHTRM430A	29.92	TWE180B4	460/3/60	2	51	60
BAYHTRM450A	49.84			2	81	90
BAYHTRM410A	10			1	24	25
BAYHTRM420A	19.92			1	34	40
BAYHTRM430A	29.92	TWE240B4, E4	460/3/60	2	54	60
BAYHTRM450A	49.84			2	84	90
BAYHTRMW10A	10			1	17	20
BAYHTRMW20A	19.92			1	30	30
BAYHTRMW30A	29.92	TWE180BW	575/3/60	2	42	45
BAYHTRMW50A	49.84			2	67	70
BAYHTRMW10A	10			1	20	25
BAYHTRMW20A	19.92			1	32	35
BAYHTRMW30A	29.92	TWE240BW, EW	575/3/60	2	45	50
BAYHTRMW50A	49.84			2	70	80

(i) kW ratings are at: 208/240V for 208-230V air handlers.
480V for 460V air handlers
600V for 575V air handlers
For other than rated voltage, capacity = $(\text{Voltage/Rated Voltage})^2$ x Rated Capacity.
(ii) Any power supply and circuits must be wired and protected in accordance with local codes.
(iii) The HACR circuit breaker is for U.S.A. installations only.
(iv) Field wire must be rated at least 90 C.

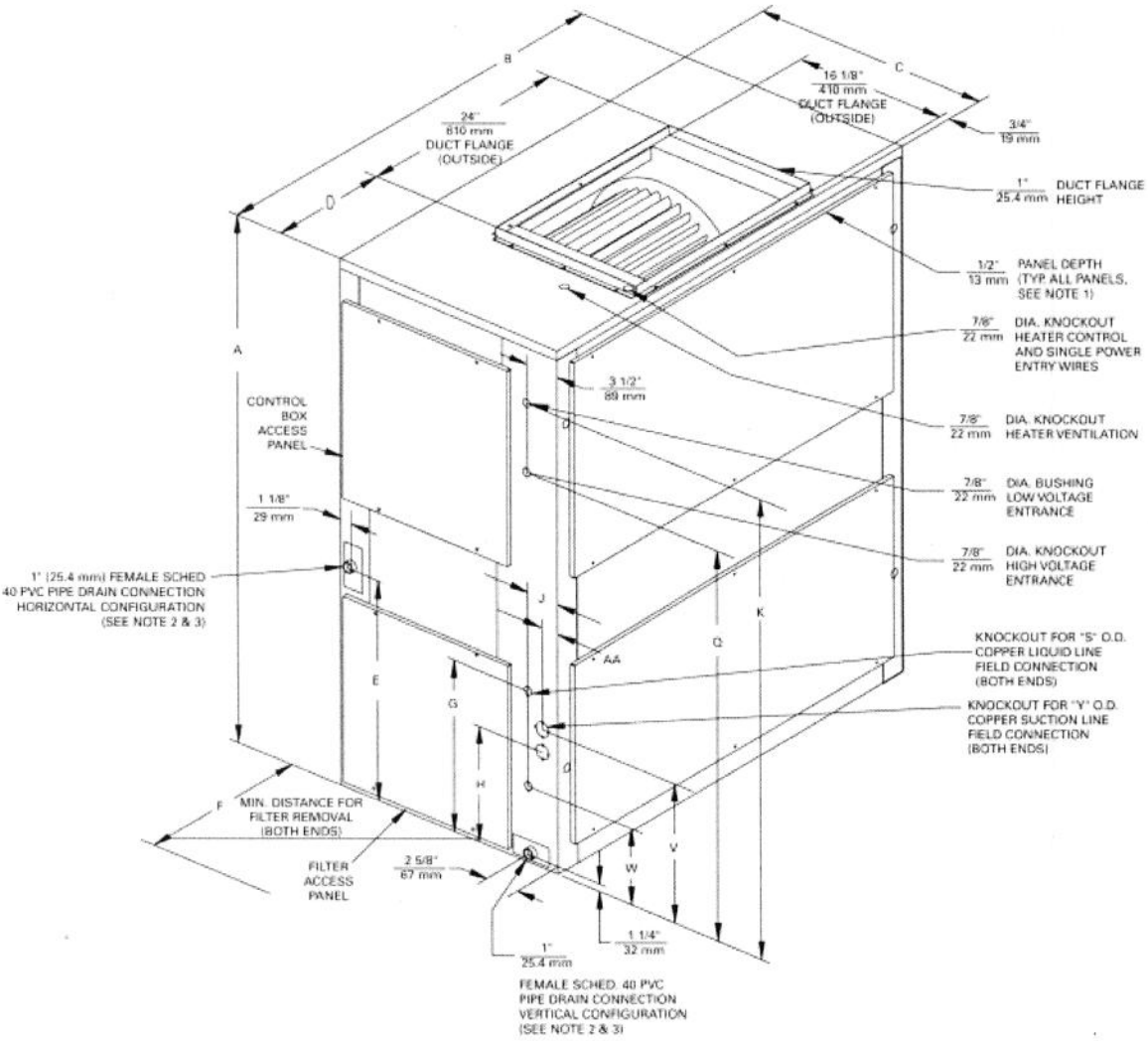

NOTE:

1. LENGTH, WIDTH, AND HEIGHT DIMENSIONS DO NOT INCLUDE 1/2" ACCESS PANEL DEPTH.

2. REMOVABLE DRAIN PAN AND ATTACHED DRAIN CONNECTION MAY BE INSTALLED ON EITHER END OF UNIT IN EITHER THE VERTICAL OR HORIZONTAL CONFIGURATION. PLASTIC DRAIN PAN ACCESS PLATE ON THE END OF UNIT OPPOSITE DRAIN CONNECTION MUST BE REMOVED TO SLIDE DRAIN PAN OUT OF UNIT FOR CLEANING. ACCESS PLATE MUST BE RE-INSTALLED AFTER SLIDING DRAIN PAN BACK INTO UNIT.

3. IF PERIODIC DRAIN PAN CLEANING IS REQUIRED, ALLOW ROOM FOR PARTIAL REMOVAL OF PAN OR DRAIN CONNECTION END OF UNIT.

Figure 31. 7½ & 10 Ton TWE090A, 120A; TWE090B, 120B Air Handlers. All dimensions are in inches (millimeters).

Table 57. Air Handler Dimensions (in.)

Tons	Model No.	A	B	C	D	E	F	G	H	J	K	Q	S	V	W	Y	AA
7½	TWE090A	54	47 1/2	25	11 3/4	22 3/8	22	-	17 3/4	4	45 1/4	38 1/8	1/2	-	15	1 3/8	2
7½	TWE090B	54	47 1/2	25	11 3/4	22 3/8	22	20 1/8	16	2 1/8	45 1/4	38 1/8	3/8	18 3/4	14	1 1/8	2 1/8
10	TWE120A	54	63 12	25	19 3/4	22 3/8	22	-	17 3/4	4	45 1/4	38 1/8	1/2	-	15	1 3/8	2
10	TWE120B	54	63 1/2	25	19 3/4	22 3/8	22	20 1/8	16	2 1/8	45 1/4	38 1/8	3/8	18 3/4	14	1 1/8	2 1/8

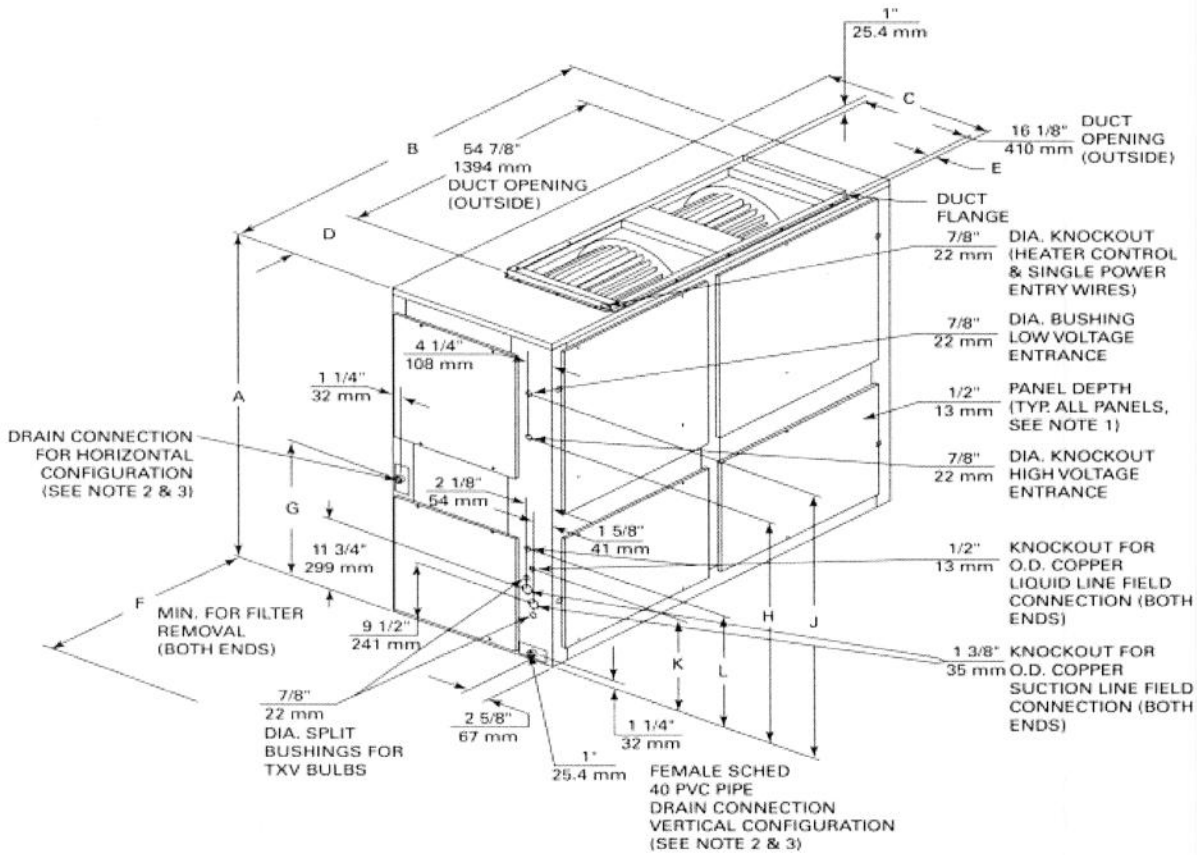

NOTE:

1. LENGTH, WIDTH, AND HEIGHT DIMENSIONS DO NOT INCLUDE 1/2" ACCESS PANEL DEPTH.

2. REMOVABLE DRAIN PAN AND ATTACHED DRAIN CONNECTION MAY BE INSTALLED ON EITHER END OF UNIT IN EITHER THE VERTICAL OR HORIZONTAL CONFIGURATION. PLASTIC DRAIN PAN ACCESS PLATE ON THE END OF UNIT OPPOSITE DRAIN CONNECTION MUST BE REMOVED TO SLIDE DRAIN PAN OUT OF UNIT FOR CLEANING. ACCESS PLATE MUST BE RE-INSTALLED AFTER SLIDING DRAIN PAN BACK INTO UNIT.

3. IF PERIODIC DRAIN PAN CLEANING IS REQUIRED, ALLOW ROOM FOR PARTIAL REMOVAL OF PAN OR DRAIN CONNECTION END OF UNIT.

Figure 33. 15 Tons TWE180 Air Handlers. All dimensions are in inches (millimeters)

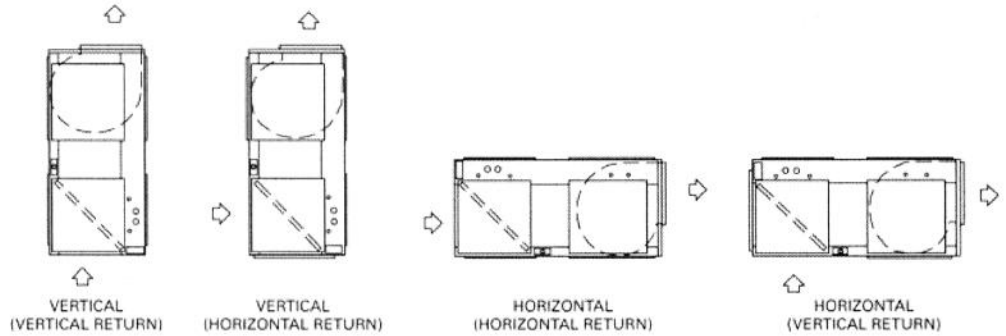

Figure 34.

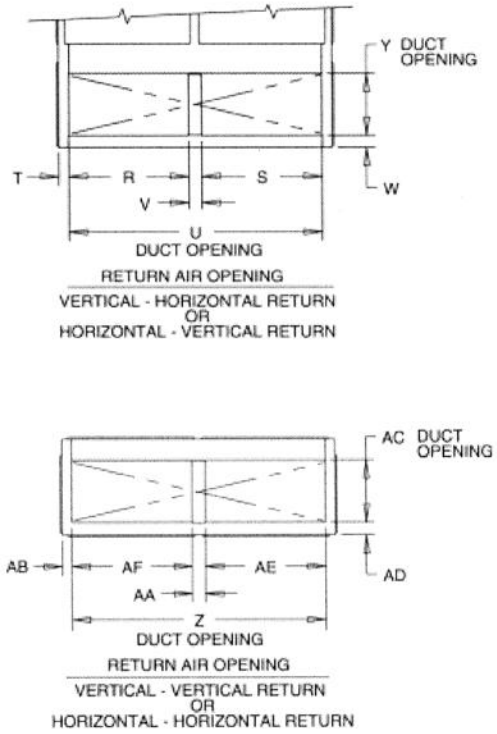

Figure 35.

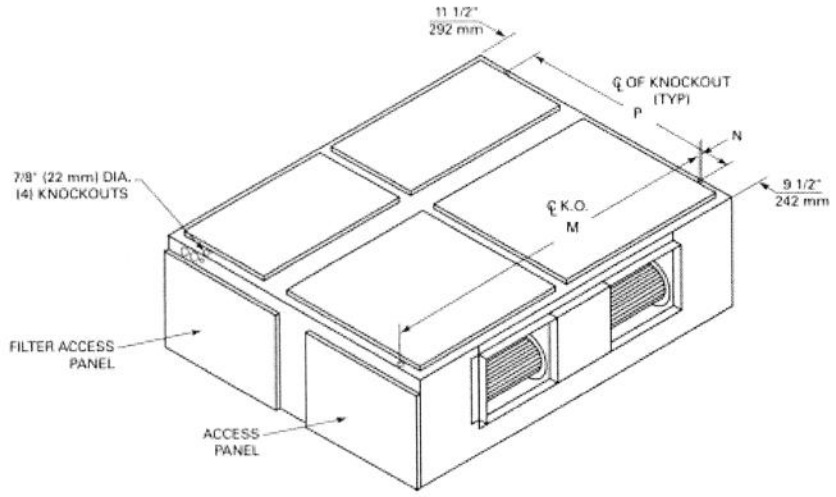

Figure 36. 15 Tons TWE 180 Air Handlers. All dimensions are in inches (millimeters)

Table 59. Electrical Characteristics - Compressor and Condenser Fan Motors - 60 Hz

Tons	Model No.	A	B	C	D	E	F	G	H	J	K	L	M	N	P	R
15	TWE180B	69	79 1/2	27 5/8	12 3/8	1 5/8	26	25 1/8	49 1/8	56 1/4	15 1/2	19 1/2	77 1/4	1 1/4	48	35

Tons	Model No.	S	T	U	V	W	Y	Z	AA	AB	AC	AD	AE	AF
15	TWE180B	35	2 7/8	73 7/8	3 3/4	3 3/8	18	73 7/8	3 3/4	2 7/8	18	3 5/8	35	35

2'-3 5/8"

Dimensional Data

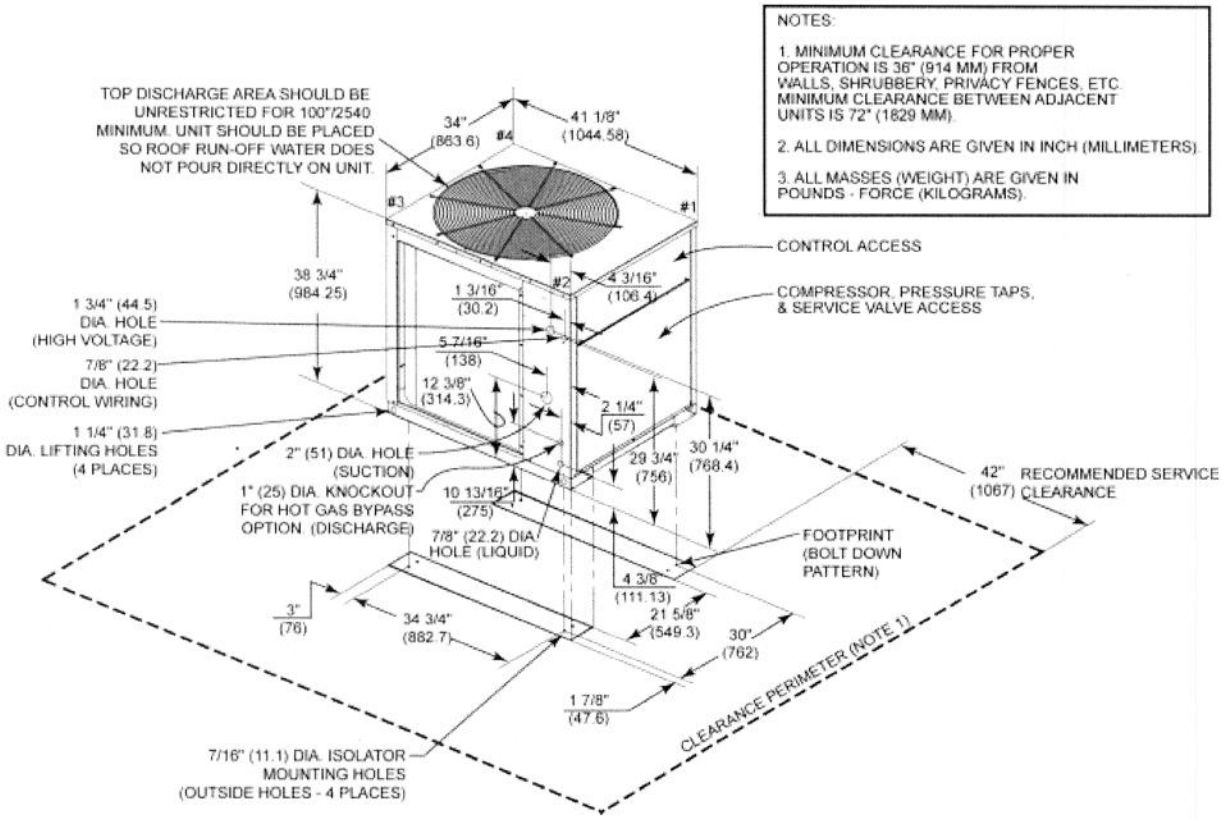

Figure 22. 7½ Tons TTA090A Condensing Unit

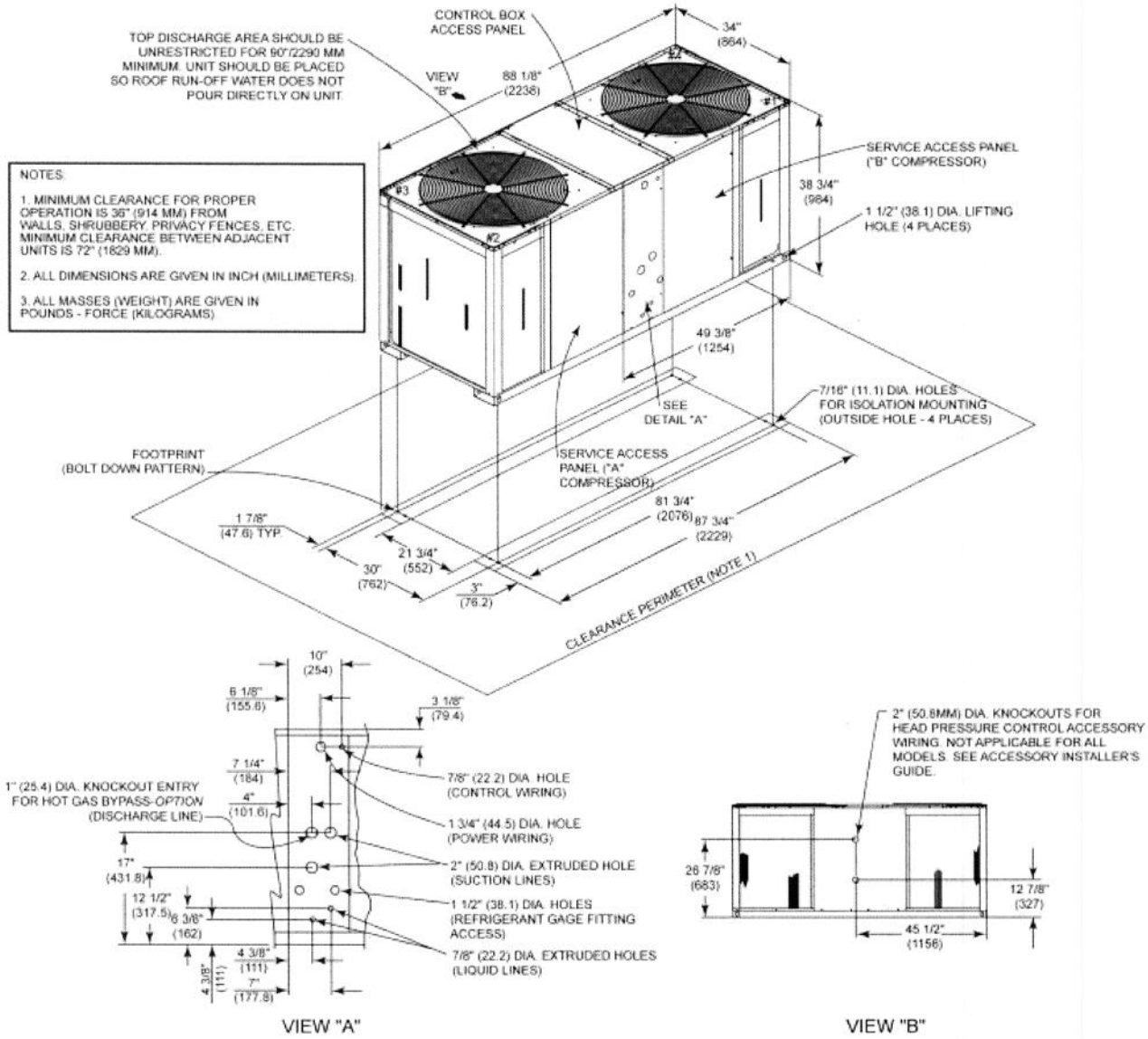

Figure 26. 15 Tons TTA180B Condensing Unit

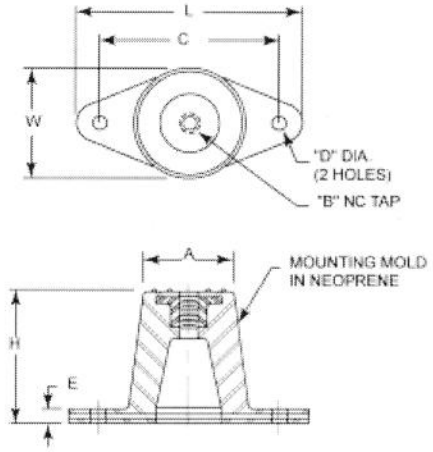

BAYISLT003, 004, 005, 009, 010

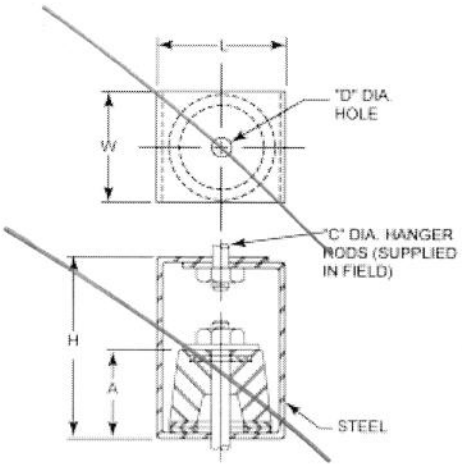

BAYISLT012, 013, 014, 015, 016

Figure 39. 5-20 Tons Rubber Isolators

Table 60. Isolator Dimensions (in.)

Model No.	L	W	H	A	B	C	D	E
BAYISLT003 BAYISLT004	3-1/8	1-3/4	1-1/4	1-1/4	3/8	2-3/8	3/8	1/4
BAYISLT005 BAYISLT009 BAYISLT010	3-7/8	2-3/8	1-3/4	1-3/4	3/8	3	3/8	1/4
BAYISLT013 BAYISLT014 BAYISLT015(i)	2-1/4	2	3	1-3/8	3/4	3/8	1/2	—
BAYISLT012 BAYISLT015(i) BAYISLT016	3	2-1/4	4-1/2	1-7/8	1/4	5/8	3/4	—

(i) BAYISLT015 contains quantity 2 of the 2 1/4 x 2 x 3 isolators and quantity 3 of the 3 x 2 1/4 x 4 1/2 isolators.

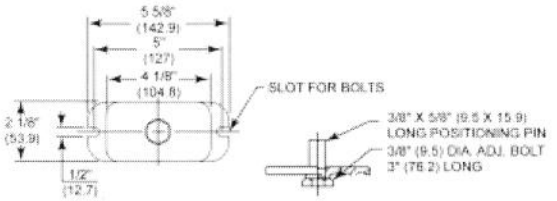

BAYISLT018, 019, 021

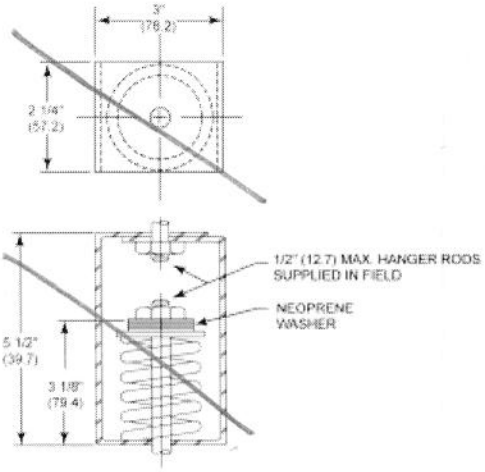

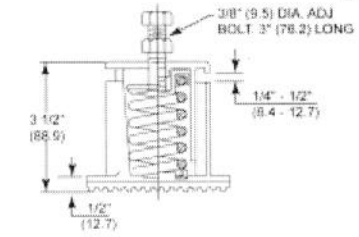

BAYISLT023, 024, 025

BAYISLT028, 029, 030 031

Figure 40. 5-20 Ton Spring Isolators

Controls

Digital Display Programmable Thermostat (2H/2C)

Two Heat/Two Cool digital display thermostat. 7-day programmable stat with night setback shall be available.

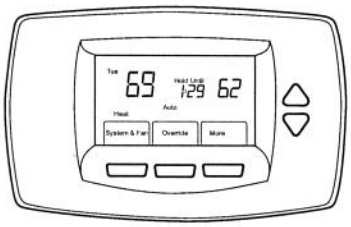

Touchscreen Programmable Thermostat (2H/2C)

Two Heat/Two Cool programmable thermostat with touch screen digital display. Menu-driven programming. Effortless set-up. Program each day separately with no need to copy multiple days. All programming can be done on one screen. Easy to read and use. Large, clear backlit digital display

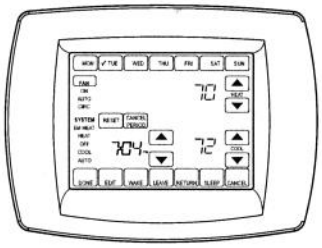

Digital Display Programmable Thermostat with Built-In Relative Humidity Sensing (3H/2C)

Three Heat/Two Cool digital display thermostat with built-in humidity control and display. This thermostat combines both humidity and dry bulb into one. Fully programmable with night setback.

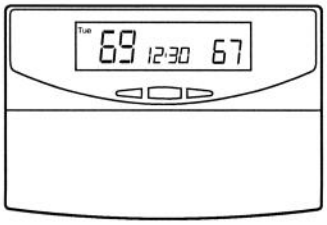

Digital Display Thermostat (3H/2C)

Three Heat, Two Cool digital display thermostat. Easy access battery replacement. Flip-out door for easy battery replacement without removing or disassembling the thermostat.

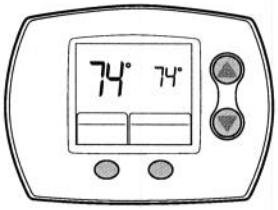

RA Remote Sensor

Return Air Remote Sensor which can be mounted in the return air duct to report return air temperature.

Room Remote Sensor

Space Remote Sensor which can be mounted on the wall to report/ control from a remote location in the space.

Outdoor Thermostat

Outdoor thermostat which can be mounted outdoors to turn on the units electric heater at a pre-selected outdoor temperature.

TurboFuser

Panel-Mounted Nozzles

TBF-AA

Models:
TBF-AA • Aluminum

These Products Include:
- Standard Finish: #26 White.

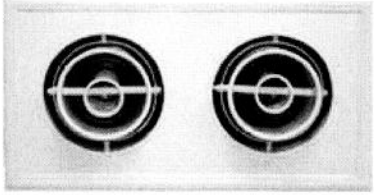

- Titus TurboFuser series TBF-AA diffuser provides precise control of high capacity jets.
- The TurboFuser is a versatile diffuser for demanding spot cooling and heating HVAC applications, such as industrial or large open areas.
- An aesthetic alternative to conventional air distribution providing a contemporary look for sports complexes, atriums and lobbies.
- Material is heavy-duty aluminum.
- Deep deflection rings in each nozzle for maintaining directional control at high velocities up to 30 degrees in any direction.
- Nozzle sizes are 6, 8, 10, 12 and 14 inches, with up to four nozzles per panel.
- Each ring of the nozzle assembly is 1-piece spun construction.

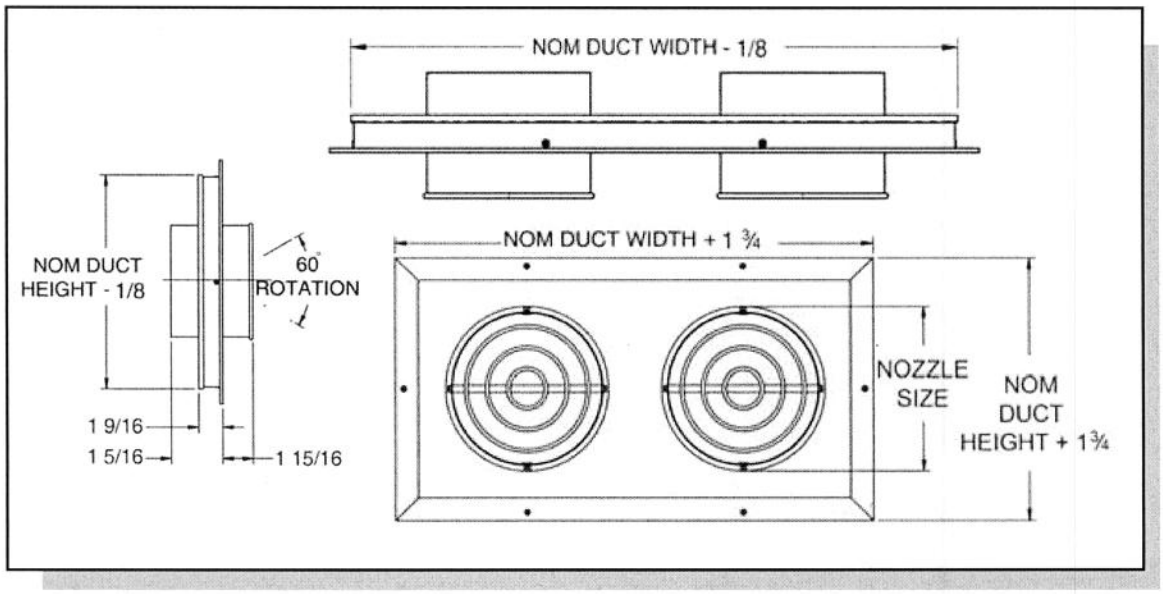

Nozzle Size (inches)	NOM Duct Height	Width by Number of Nozzles			
		1	2	3	4
6	6	10	19	28	37
8	8	12	23	34	45
10	10	14	17	40	53
12	12	16	31	46	61
14	14	18	35	52	69

Typical Installation

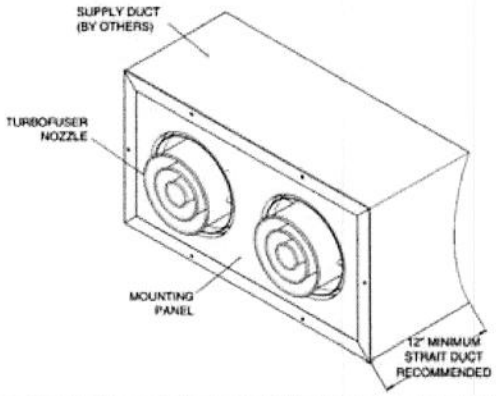

All dimensions are in inches.

Performance Data

TBF-AA • Panel-Mounted Nozzles

	Duct Velocity, fpm	200	300	400	500	600	700	800
	Velocity Pressure, IN WG	0.002	0.006	0.010	0.016	0.022	0.031	0.040
Size 6 1 Nozzle	**Airflow, cfm**	**135**	**203**	**271**	**339**	**406**	**474**	**542**
	Total Pressure, IN WG	0.076	0.171	0.303	0.474	0.683	0.929	1.214
	NC (Noise Criteria)	-	13	24	32	38	44	50
	Throw, FT	12-15-20	14-17-25	17-20-29	19-23-33	21-25-36	22-27-39	24-29-43
Size 6 2 Nozzle	**Airflow, cfm**	**259**	**388**	**518**	**647**	**777**	**906**	**1036**
	Total Pressure, IN WG	0.070	0.158	0.281	0.440	0.633	0.862	1.125
	NC (Noise Criteria)	-	18	29	36	43	49	54
	Throw, FT	17-20-29	20-24-35	23-29-41	26-32-46	29-35-51	31-28-55	34-41-60
Size 6 3 Nozzle	**Airflow, cfm**	**382**	**573**	**765**	**956**	**1147**	**1338**	**1529**
	Total Pressure, IN WG	0.070	0.157	0.278	0.435	0.626	0.853	1.114
	NC (Noise Criteria)	-	20	30	39	43	51	56
	Throw, FT	21-25-35	25-30-44	29-35-51	33-40-57	36-44-63	38-47-67	42-51-74
Size 6 4 Nozzle	**Airflow, cfm**	**506**	**759**	**1012**	**1264**	**1517**	**1770**	**2023**
	Total Pressure, IN WG	0.070	0.157	0.278	0.435	0.626	0.853	1.114
	NC (Noise Criteria)	-	23	33	41	48	53	58
	Throw, FT	23-29-40	28-34-49	33-40-57	37-45-64	41-49-71	43-54-76	48-57-83
Size 8 1 Nozzle	**Airflow, cfm**	**196**	**294**	**392**	**490**	**588**	**685**	**783**
	Total Pressure, IN WG	0.056	0.127	0.226	0.353	0.508	0.691	0.903
	NC (Noise Criteria)	-	15	19	27	34	39	45
	Throw, FT	15-17-25	17-21-30	20-25-34	22-27-40	25-30-43	27-32-47	29-34-51
Size 8 2 Nozzle	**Airflow, cfm**	**377**	**566**	**755**	**943**	**1132**	**1320**	**1509**
	Total Pressure, IN WG	0.053	0.118	0.210	0.328	0.473	0.644	0.841
	NC (Noise Criteria)	-	16	25	34	40	46	50
	Throw, FT	21-24-34	24-30-42	28-34-48	31-38-55	34-42-60	37-45-66	40-48-71
Size 8 3 Nozzle	**Airflow, cfm**	**559**	**838**	**1117**	**1397**	**1676**	**1955**	**2235**
	Total Pressure, IN WG	0.052	0.116	0.206	0.322	0.464	0.631	0.824
	NC (Noise Criteria)	-	18	29	36	42	49	53
	Throw, FT	26-30-42	30-37-52	35-42-59	38-48-68	42-52-75	46-56-82	50-59-88
Size 8 4 Nozzle	**Airflow, cfm**	**740**	**1110**	**1480**	**1850**	**2220**	**2590**	**2961**
	Total Pressure, IN WG	0.052	0.116	0.207	0.323	0.465	0.633	0.827
	NC (Noise Criteria)	-	18	29	37	43	50	54
	Throw, FT	29-34-48	34-42-59	39-48-67	43-54-78	48-59-85	52-64-93	56-67-100
Size 10 1 Nozzle	**Airflow, cfm**	**267**	**401**	**535**	**668**	**802**	**936**	**1070**
	Total Pressure, IN WG	0.037	0.084	0.149	0.232	0.334	0.455	0.594
	NC (Noise Criteria)	-	-	20	28	34	41	45
	Throw, FT	16-20-29	20-25-35	24-29-41	26-32-46	29-35-50	31-38-55	33-41-59
Size 10 2 Nozzle	**Airflow, cfm**	**518**	**777**	**1036**	**1295**	**1554**	**1813**	**2072**
	Total Pressure, IN WG	0.035	0.079	0.140	0.219	0.315	0.429	0.560
	NC (Noise Criteria)	-	14	25	33	35	45	52
	Throw, FT	23-28-40	28-35-50	33-40-57	37-44-64	40-50-70	43-54-76	47-57-83
Size 10 3 Nozzle	**Airflow, cfm**	**768**	**1153**	**1537**	**1921**	**2305**	**2689**	**3074**
	Total Pressure, IN WG	0.032	0.071	0.127	0.198	0.285	0.388	0.506
	NC (Noise Criteria)	-	16	27	34	42	47	53
	Throw, FT	28-34-50	34-43-61	41-50-70	45-55-79	50-61-87	54-66-95	57-70-102
Size 10 4 Nozzle	**Airflow, cfm**	**1019**	**1528**	**2038**	**2547**	**3057**	**3566**	**4076**
	Total Pressure, IN WG	0.031	0.071	0.125	0.196	0.282	0.384	0.501
	NC (Noise Criteria)	-	18	29	37	43	48	54
	Throw, FT	32-39-56	39-49-69	46-56-80	51-62-90	56-69-98	61-75-107	65-80-116

AHU-3,4
750 cfm →

1500 cfm →

For Performance Notes, please refer to end of table.

Titus

Performance Data (continued)

TBF-AA • Panel-Mounted Nozzles

AHU-1,2
1000cfm

F 2,000

	Duct Velocity, fpm	200	300	400	500	600	700	800
	Velocity Pressure, IN WG	0.002	0.006	0.010	0.016	0.022	0.031	0.040
Size 12 1 Nozzle	**Airflow, cfm**	**350**	**525**	**700**	**875**	**1050**	**1225**	**1400**
	Total Pressure, IN WG	0.033	0.075	0.132	0.207	0.298	0.406	0.530
	NC (Noise Criteria)	-	-	18	27	33	39	47
	Throw, FT	19-23-33	23-28-40	27-33-47	30-36-52	33-40-58	35-43-62	38-47-67
Size 12 2 Nozzle	**Airflow, cfm**	**681**	**1021**	**1362**	**1702**	**2042**	**2383**	**2723**
	Total Pressure, IN WG	0.031	0.071	0.126	0.197	0.283	0.385	0.503
	NC (Noise Criteria)	-	16	27	35	42	47	53
	Throw, FT	26-32-46	32-40-56	37-46-66	42-51-73	46-56-81	50-61-87	53-66-94
Size 12 3 Nozzle	**Airflow, cfm**	**1011**	**1517**	**2023**	**2529**	**3034**	**3540**	**4046**
	Total Pressure, IN WG	0.031	0.070	0.124	0.193	0.278	0.379	0.495
	NC (Noise Criteria)	-	16	27	34	41	46	52
	Throw, FT	32-40-57	40-49-69	46-57-81	52-63-90	57-69-100	61-75-107	66-81-116
Size 12 4 Nozzle	**Airflow, cfm**	**1324**	**2013**	**2684**	**3356**	**4027**	**4698**	**5369**
	Total Pressure, IN WG	0.031	0.069	0.123	0.192	0.276	0.375	0.490
	NC (Noise Criteria)	-	16	27	35	43	49	53
	Throw, FT	36-45-64	45-56-78	52-64-92	59-71-102	64-78-113	69-85-122	75-92-132
Size 14 1 Nozzle	**Airflow, cfm**	**444**	**666**	**888**	**1109**	**1331**	**1553**	**1775**
	Total Pressure, IN WG	0.024	0.055	0.097	0.125	0.219	0.299	0.390
	NC (Noise Criteria)	-	-	18	27	33	39	44
	Throw, FT	21-26-37	26-32-45	29-37-53	34-41-59	37-45-65	40-49-70	43-53-75
Size 14 2 Nozzle	**Airflow, cfm**	**866**	**1299**	**1732**	**2165**	**2597**	**3030**	**3463**
	Total Pressure, IN WG	0.023	0.052	0.093	0.146	0.210	0.286	0.373
	NC (Noise Criteria)	-	12	23	30	37	43	47
	Throw, FT	30-36-51	36-45-64	41-51-74	47-58-83	51-64-91	56-69-98	60-74-106
Size 14 3 Nozzle	**Airflow, cfm**	**1288**	**1932**	**2576**	**3220**	**3864**	**4508**	**5151**
	Total Pressure, IN WG	0.023	0.052	0.092	0.144	0.207	0.281	0.368
	NC (Noise Criteria)	-	15	25	34	40	46	52
	Throw, FT	37-35-63	45-55-79	50-63-91	58-72-102	63-79-113	70-85-122	74-91-131
Size 14 4 Nozzle	**Airflow, cfm**	**1710**	**2565**	**3420**	**2475**	**5130**	**5985**	**6840**
	Total Pressure, IN WG	0.023	0.051	0.091	0.142	0.205	0.279	0.365
	NC (Noise Criteria)	-	16	26	36	41	47	53
	Throw, FT	42-51-72	51-63-89	57-72-103	66-81-116	72-89-128	79-96-138	84-103-148

- All pressures given are in inches of water.
- Throw values given are for terminal velocities of 150, 100 and 50 fpm and for isothermal conditions. See the section, Engineering Guidelines for additional throw information.
- To obtain static pressure, subtract the velocity pressure from the total pressure.
- If the diffuser is mounted on an exposed duct, the throw values are 70% of those listed in the table and will project downward.
- Each NC value represents the noise criteria curve that will not be exceeded by the sound pressure in any of the octave bands, 2nd through 7th, with a room absorption of 10 dB, re 10^{-12} watts.
- Dash (-) in space denotes an NC value of less than 10.
- Data obtained from tests conducted in accordance with ANSI/ASHRAE Standard 70-1991. Actual performance, with flexible duct inlet, may vary in the field. See the section, Engineering Guidelines for additional information.

Table 2. General Data - 12½, 15 and 20 Ton Condensing Units

	12½ Tons	15 Tons		20 Tons	
	Dual Compressor TTA150B3, B4, BW	Dual Compressor TTA180B3, B4, BW	Manifolded Compressor TTA180C3, C4, CW	Dual Compressor TTA240B3, B4, BW	Manifolded Compressor TTA240F3, F4, FW
Cooling Performance(i)					
Gross Cooling Capacity					
Matched Air Handler	148,000	182,000	182,000	246,000	246,000
Condensing Unit Only(ii)	148,000	182,000	182,000	246,000	246,000
ARI Net Cooling Capacity(iii)	144,000	176,000	176,000	238,000	247,000
EER(iv)					
Matched Air Handler	9.8	9.7	9.7	9.7	10.1
Condensing Unit Only	11.0	11.1	11.1	11.1	12.0
System Integrated Part Load Value(v)	11.0	10.9	13.0	10.9	13.0
Condensing Unit Only IPLV(v)	13.7	14.0	15.0	14.0	15.0
System kW/Condensing Unit kW	14.70/13.43	18.18/16.43	18.16/16.35	24.61/22.17	24.36/20.5
Compressor No./Type	2/Trane Climatuff™ Scroll	2/Trane 3-D™ Scroll	2/Trane 3-D™ Scrolls	2/Trane 3-D™ Scrolls	2/Copeland™ Scrolls
No. Motors/HP	2/6.25	2/7.50	2/7.50	2/10.0	2/10.1
Motor RPM	3450	3450	3450	3450	3500
Sound Rating (dBA)(vi)	89	89	89	92	92
System Data(vii)					
No. Refrigerant Circuits	2	2	1	2	1
Suction Line (in.) OD	1 1/8	1 3/8	1 5/8	1 3/8	1 5/8
Liquid Line (in.) OD	3/8	1/2	5/8	1/2	5/8
Outdoor Coil - Type	Plate Fin	Plate Fin	Plate Fin	Plate Fin	Plate Fin
Tube Size (in.) OD	.375	.375	.375	.375	.375
Face Area (sq ft)	24.0	33.3	30.7	50.2	52.9
Rows/FPI	2/18	2/20	2/20	2/18	2/18
Outdoor Fan - Type	Propellor	Propellor	Propellor	Propellor	Propellor
No. Used/Diameter (in.)	1/28	2/26	2/26	2/28	2/28
Drive Type/No. Speeds	Direct/1	Direct/1	Direct/1	Direct/1	Direct/1
CFM	8120	10900	11340	16120	14600
No. Motor/HP	1/1.00	2/.50	2/.50	2/1.00	2/1.00
Motor RPM	1100	1100	1100	1100	1100
Refrigerant Charge (Field Supplied)					
(lbs of R-22)(viii)	23.6	30.0	28.00	40.0	-
(lbs of R-410A)(viii)	-	-	-	-	41.3

(i) Cooling Performance is rated at 95° F ambient, 80° F entering dry bulb, 67° F entering wet bulb. Gross capacity does not include the effect of fan motor heat. ARI capacity is net and includes the effect of fan motor heat. Certified in accordance with the Unitary Large Equipment certification program, which is based on ARI Standard 340/360-00 or 365-00.
(ii) Condensing unit only gross cooling capacity rated at 45° F saturated suction temperature and at 95° F ambient.
(iii) ARI net cooling capacity is calculated with matched blower coil and 25 feet of 1 3/8" or 1/2" OD (1 5/8" and 5/8" on TTA240F) interconnecting tubing.
(iv) EER is rated at ARI conditions and in accordance with DOE test procedures.
(v) Integrated part load value is based on ARI Standard 340/360-00 or 365-00. Units are rated at 80° F ambient, 80° F entering dry bulb (DB), and 67° F entering wet bulb (WB) at ARI rated cfm.
(vi) Sound rating shown is tested in accordance with ARI Standard 270.
(vii) Refer to refrigerant piping applications manual for line sizing and line length.
(viii) Refrigerant (operating) charge is for condensing unit (all circuits) with matching blower coils and 25 feet of interconnecting refrigerant lines. All units are supplied with a small nitrogen holding charge only.

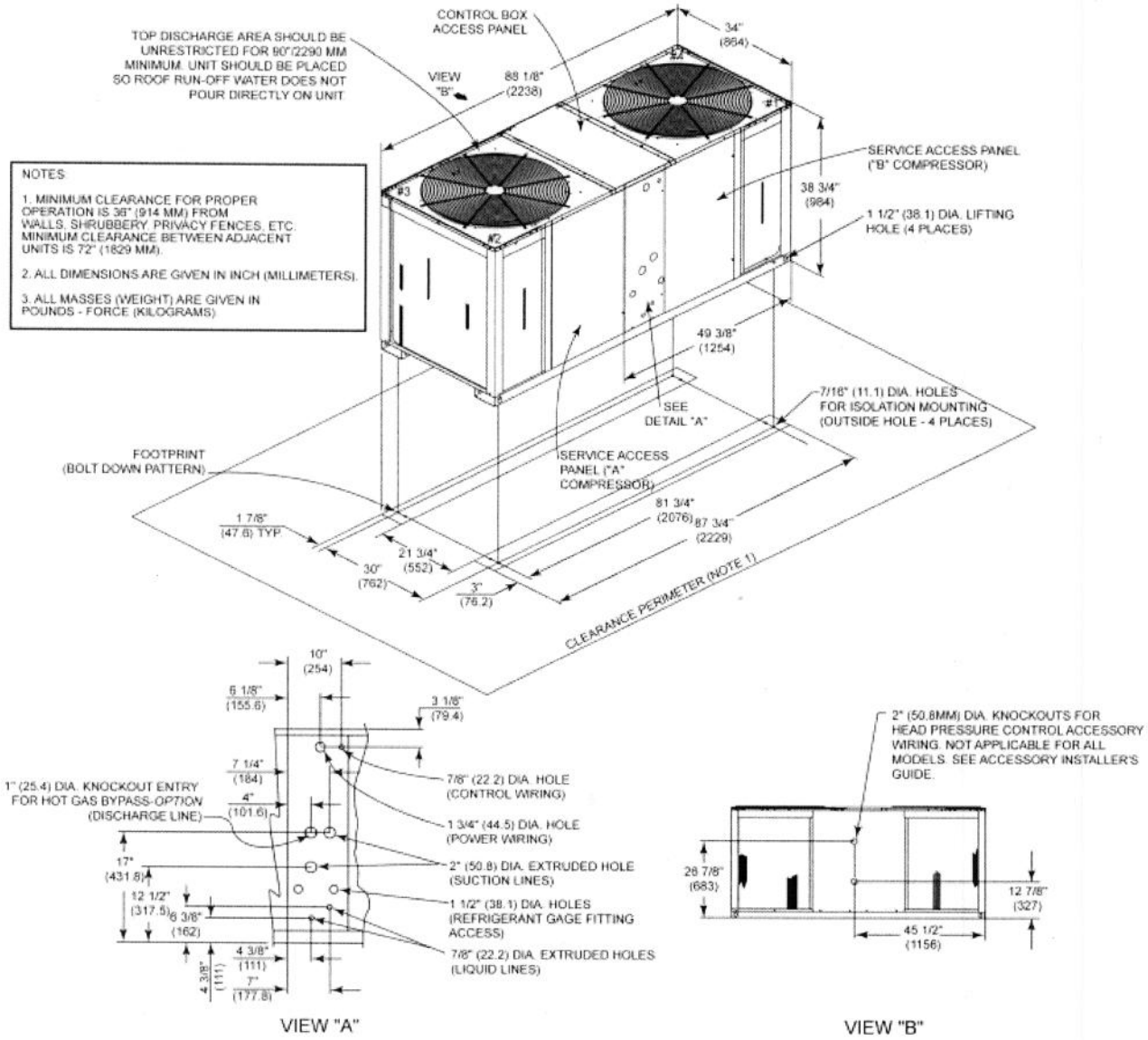

Figure 26. 15 Tons TTA180B Condensing Unit