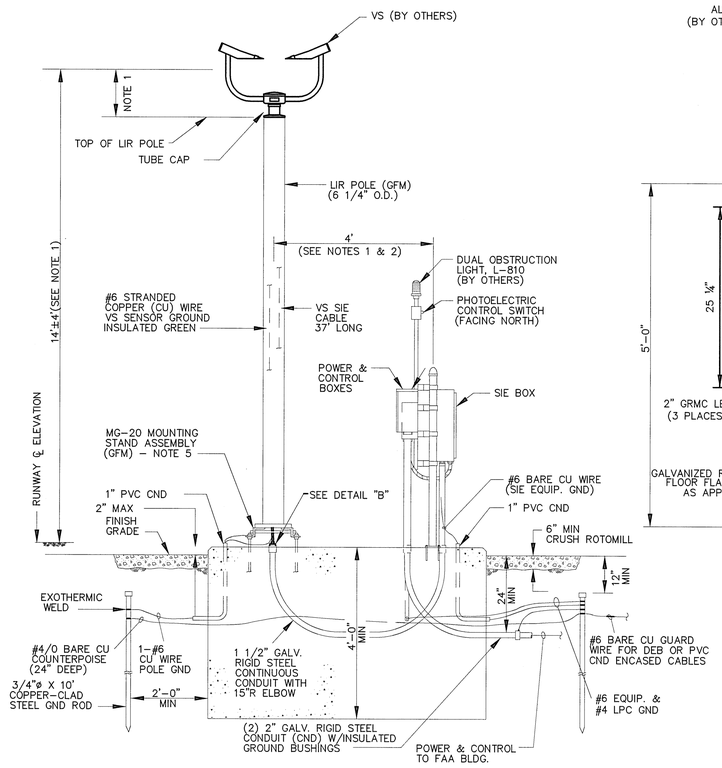

ELEVATION VIEW (PROFILE)

LIR POLE AND SIE BOX SUPPORT

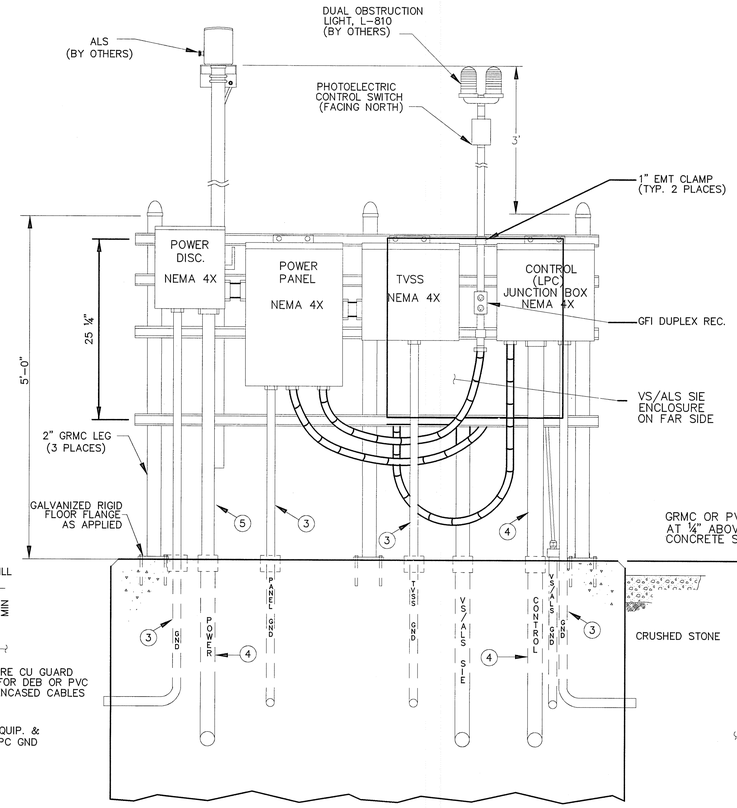

REAR ELEVATION VIEW

SIE BOX SUPPORT

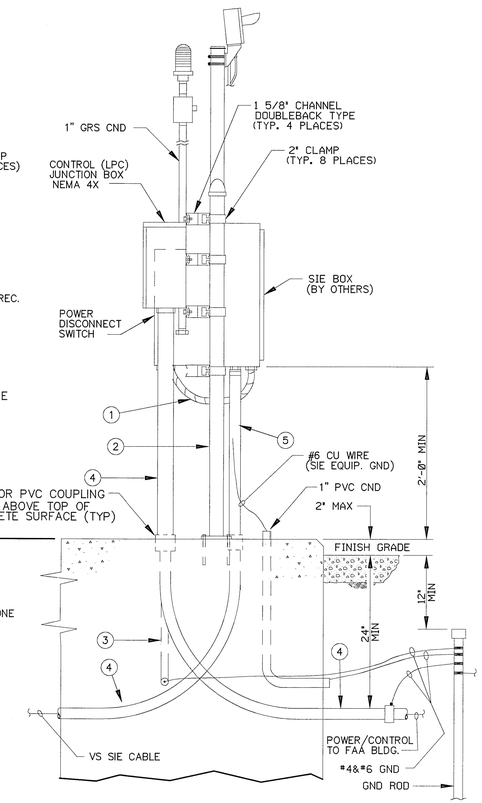

PARTIAL SIDE ELEVATION VIEW

SIE BOX SUPPORT

NOTES:

1. BASIC REQUIREMENTS FOR TOUCHDOWN, MIDPOINT AND ROLLOUT RVR INSTALLATIONS ARE AS FOLLOWS:
   A. HEIGHT FROM CENTERLINE OF TRANSMITTER/RECEIVER IS 14 FEET ±4 FEET ABOVE ELEVATION OF RUNWAY CENTERLINE PERPENDICULAR TO STRUCTURE.
   B. TOP OF LIR POLE TO CENTERLINE OF MEASUREMENT VOLUME IS APPROXIMATELY 1 FOOT 2 INCHES. CUT FIBERGLASS POLE TO DESIRED LENGTH AS DETERMINED FROM FIELD SURVEY.
2. SEE SITE DRAWINGS FOR LOCATION AND ORIENTATION RESTRICTIONS.
3. ALL METAL PARTS, CONDUITS, EQUIPMENT AND JUNCTION BOXES SHALL BE GROUNDED IN ACCORDANCE WITH FAA-STD-019.

LEGEND:

1. 3/4" DIA FLEXIBLE LIQUID TIGHT CONDUIT WITH COUPLINGS
2. 2" DIA GRMC CONDUIT WITH FRANGIBLE COUPLINGS
3. 1" DIA SCH 80 PVC CONDUIT (FOR GROUND)
4. 2" DIA GALVANIZED RIGID STEEL (GRS) CONDUIT
5. 1.5" DIA GALVANIZED RIGID STEEL (GRS) CONDUIT
6. 2" DIA GALVANIZED RIGID STEEL (GRS) CONDUIT

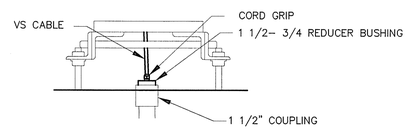

DETAIL "B"

VS CABLE

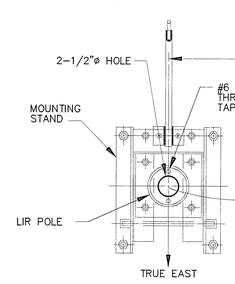

PARTIAL PLAN VIEW

FOUNDATION NOT SHOWN

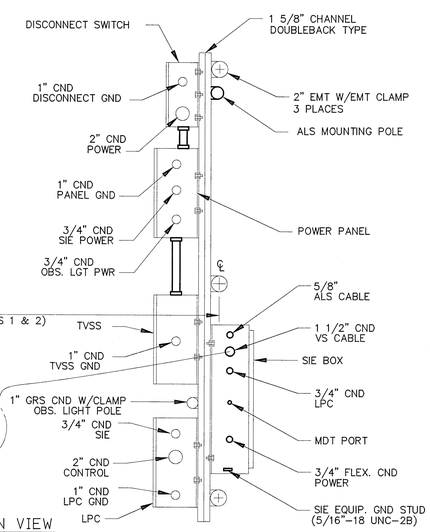

FOR OFFICIAL USE ONLY

PUBLIC AVAILABILITY TO BE DETERMINED UNDER 5 USC 552

REV	APPROVED DATE	DESCRIPTION	JCN	REDLINE DATE	APVD
A	1/26/2012	UPDATE CONSTRUCTION DRAWING	503081		

DEPARTMENT OF TRANSPORTATION

FEDERAL AVIATION ADMINISTRATION

ATO - TECHNICAL OPERATIONS — WESTERN SERVICE AREA

RVR

RUNWAY 31

TYPICAL VS AND SIE UNIT DETAILS

SALINAS — SONOMA COUNTY AIRPORT — CA

REVIEWED BY	SUBMITTED BY: MARISSA TRIAS-RUIZ, PROJECT ENGINEER	APPROVED BY: MORRIS S.CLARK, MGR: ENGINEERING - SEATTLE
DESIGNED: MTR	ISSUED BY: ENGINEERING SERVICES NAVAIDS	DATE: 11/22/2011 JCN: 503081
DRAWN		DRAWING NO: SNS-D-RVR31-C002 REV: A
CHECKED		

ISSUED FOR: CONSTRUCTION

sns-d-rvr31-c002.dgn 1/26/2012 1:26:34 PM lori.ivona