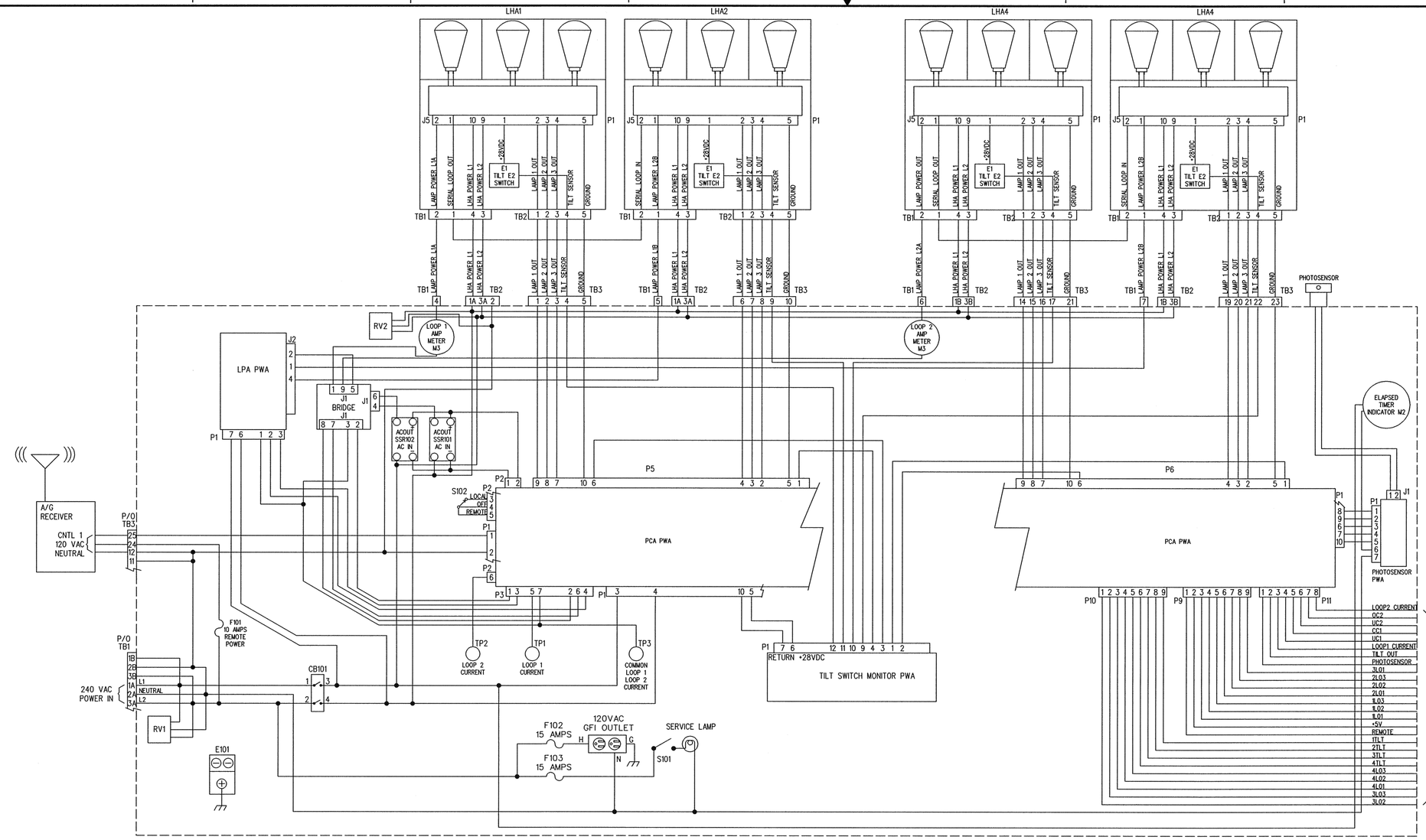

FOR OFFICIAL USE ONLY
PUBLIC AVAILABILITY TO BE DETERMINED UNDER 5 USC 552

ONE LINE WIRING DIAGRAM

NOT TO SCALE

REV	APPROVED DATE	DESCRIPTION	JCN	REDLINE DATE	APVD

DEPARTMENT OF TRANSPORTATION
FEDERAL AVIATION ADMINISTRATION
ATO - TECHNICAL OPERATIONS **WESTERN SERVICE AREA**

PAPI
RUNWAY 28L
ELECTRICAL WIRING DIAGRAM

PORTLAND PORTLAND INTERNATIONAL AIRPORT OR

REVIEWED BY | SUBMITTED BY | APPROVED BY
PROJECT ENGINEER | MGR: ENGINEERING / SEATTLE
DESIGNED | ISSUED BY ENGINEERING SERVICES NAV ADS | DATE 2-26-10 | JCN
DRAWN | DRAWING NO PDX-D-PAPI28L-E001 | REV
CHECKED

ISSUED FOR: CONSTRUCTION

EDMI: PDX-D-PAPI28L-E001

FOR CONSTRUCTION

RW28L-12

P:\X-SP\Working_28L_PAPI\Working\PDX-D-PAPI28L-E001.dgn
2/24/2010 10:04:33 PM PDX-D-PAPI28L-E001.dgn