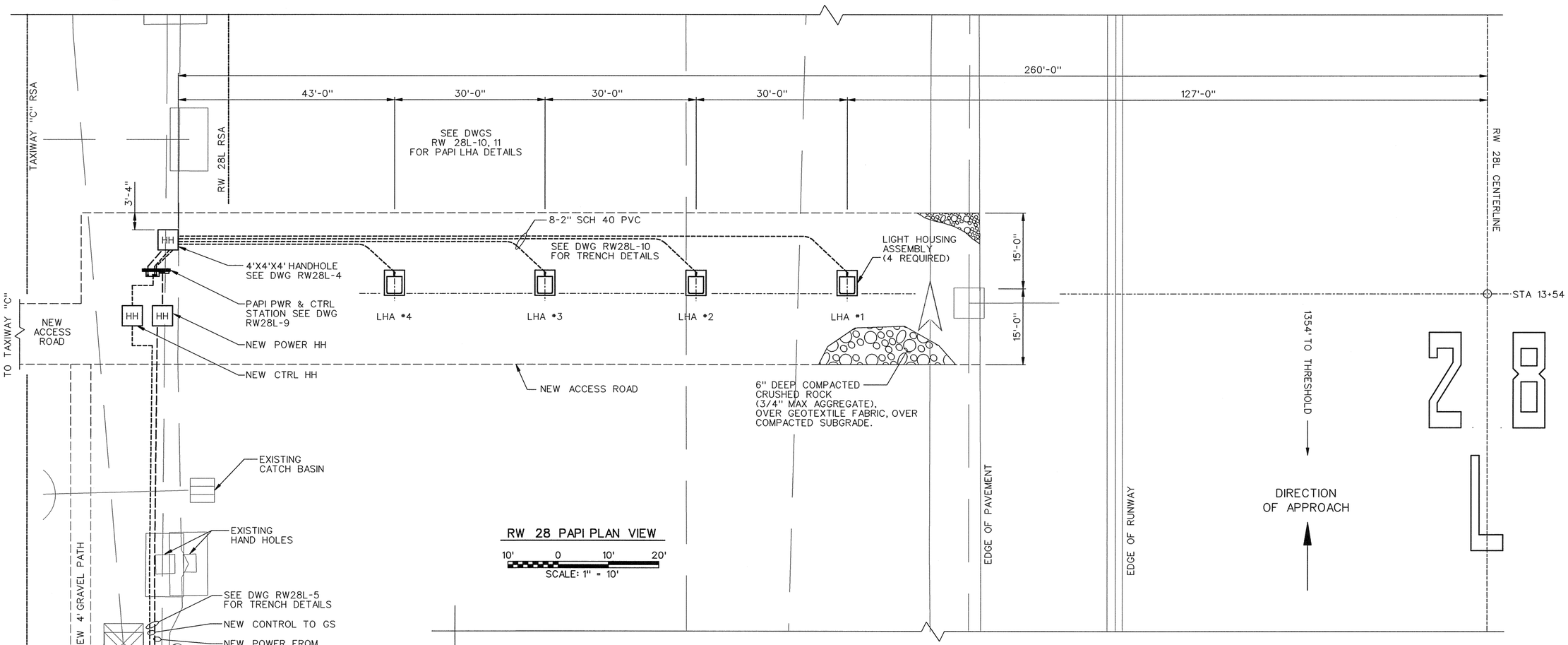

RW 28 PAPI PLAN VIEW

10' 0 10' 20'

SCALE: 1" = 10'

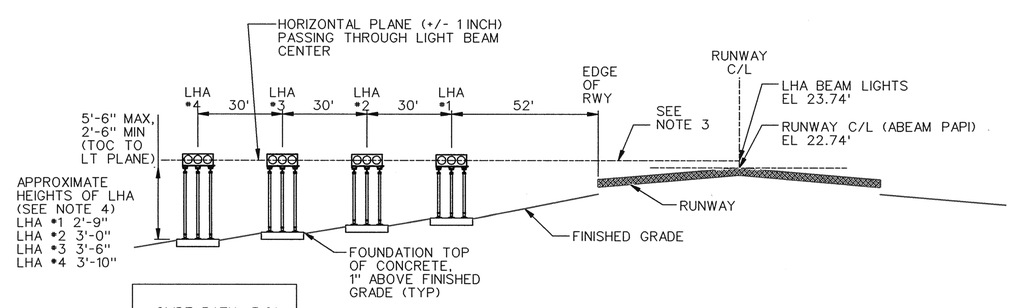

RW 28L PAPI ELEVATIONS
(VIEW ON APPROACH)
NOT TO SCALE

GLIDE PATH: 3.0°

LHA	AIMING ANGLE
#1	3° 35' 00"
#2	3° 15' 00"
#3	2° 45' 00"
#4	2° 25' 00"

NOTES:

1. INSTALLATION TOLERANCES FOR SEPERATION BETWEEN LHA'S AND DISTANCE BETWEEN LHA #1 AND EDGE OF RUNWAY IS ±2 INCHES.
2. THE FRONT FACE OF EACH LHA SHALL BE IN A LINE PERPINDICULAR TO THE RUNWAY CENTERLINE, ±1 INCH.
3. CENTER OF LHA LIGHT BEAM SHALL BE 12" HIGHER THAN PAPI ABEAM CENTERLINE ± 1"
4. VERIFY LHA HEIGHTS WITH THE FAA RE BEFORE CUTTING EMT LEGS.

FOR CONSTRUCTION

FOR OFFICIAL USE ONLY
PUBLIC AVAILABILITY TO BE DETERMINED UNDER 5 USC 552

REV	APPROVED DATE	DESCRIPTION	JCN	REDLINE DATE	APVD

DEPARTMENT OF TRANSPORTATION
FEDERAL AVIATION ADMINISTRATION
ATO - TECHNICAL OPERATIONS WESTERN SERVICE AREA

PAPI
RUNWAY 28L
PAPI PLAN

PORTLAND PORTLAND INTERNATIONAL AIRPORT OR

REVIEWED BY
SUBMITTED BY
PROJECT ENGINEER
APPROVED BY
MGR: ENGINEERING SEATTLE
DESIGNED
DRAWN
CHECKED
ISSUED BY
ENGINEERING SERVICES
NAV AIDS
DATE 7-26-10
JCN
DRAWING NO
PDX-D-PAPI28L-C002
REV

ISSUED FOR: CONSTRUCTION
080000.3042

EDM: PDX-D-PAPI28L-C002

P:\PdPi\Working_28L_PAPI\Working\PDX-D-PAPI28L-C002.dgn
2/24/2010 10:03:10 PM PDX-D-PAPI28L-C002.dgn

RW28L-8