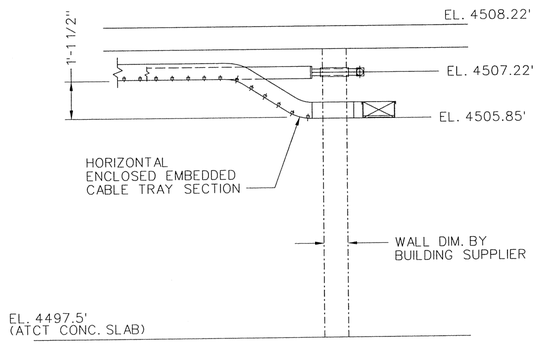

A - B SECTION
SCALE: 3/4"=1'-0"

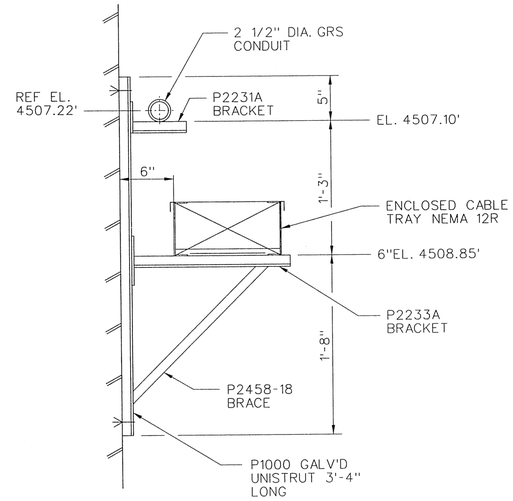

C - SECTION
SCALE: 1 1/2"=1'-0"

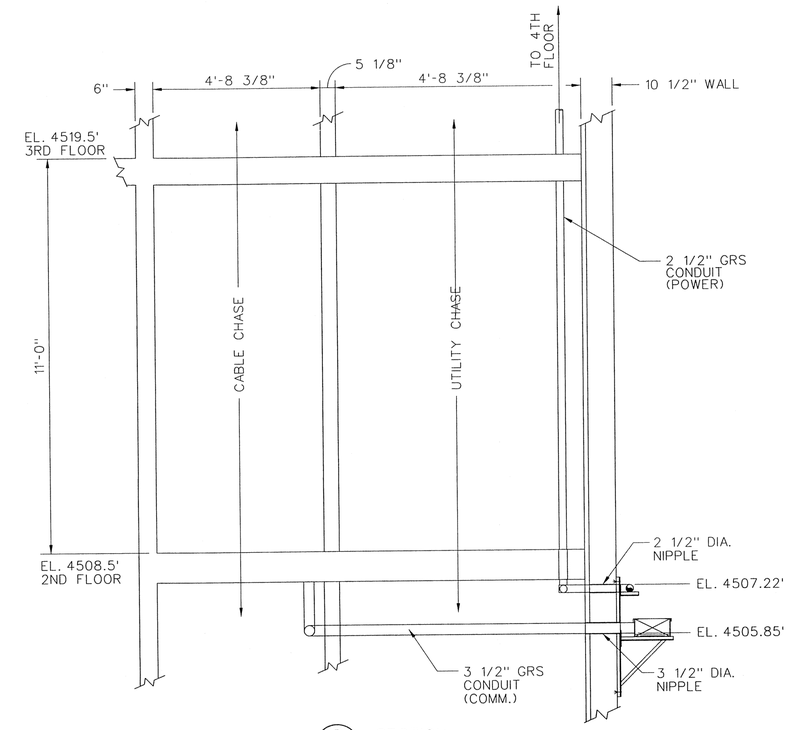

D - SECTION
SCALE: 1/2"=1'-0"

INFORMATION ONLY

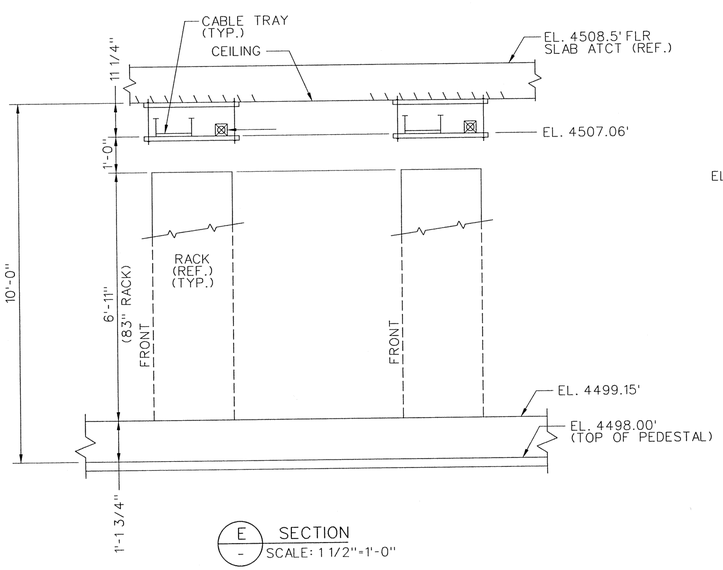

E - SECTION
SCALE: 1 1/2"=1'-0"

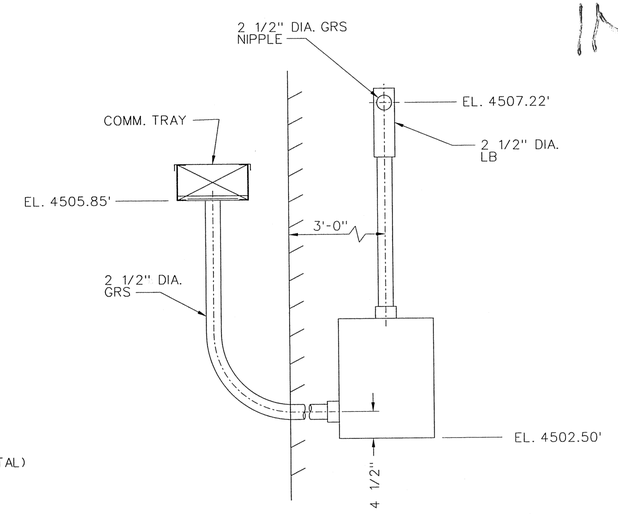

F - SECTION
SCALE: 1"=1'-0"

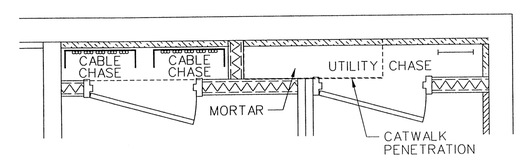

1 - DETAIL
SCALE: 1/2"=1'-0"

1' 9" 6" 3" 0 1'
SCALE: 1 1/2" = 1'-0"

1' 0 1' 2' 5'
SCALE: 1/2" = 1'-0"

1' 0 1' 2'
SCALE: 1" = 1'-0"

1' 0 1' 2' 3'
SCALE: 3/4" = 1'-0"

REV	DATE	DESCRIPTION	JCN	REDLINE DATE	APVD

DEPARTMENT OF TRANSPORTATION
FEDERAL AVIATION ADMINISTRATION
ATO - TECHNICAL OPERATIONS WESTERN SERVICE AREA

RTR

RCO AND RTR SYSTEMS
CONTROL ROOM MODIFICATION
BUILDING DETAILS

PROVO PROVO MUNICIPAL AIRPORT UT

REVIEWED BY
SUBMITTED BY DO NOT SIGN
APPROVED BY DO NOT SIGN
PROJECT ENGINEER
MGR: ENGINEERING - SEATTLE
DESIGNED AWS
DRAWN BK
CHECKED
ISSUED BY ENGINEERING SERVICES TERMINAL
DATE
JCN 908283
DRAWING NO PVU-D-RTR-C003
REV

ISSUED FOR:

Guest 9:30:17 AM $FILES 4/27/2011