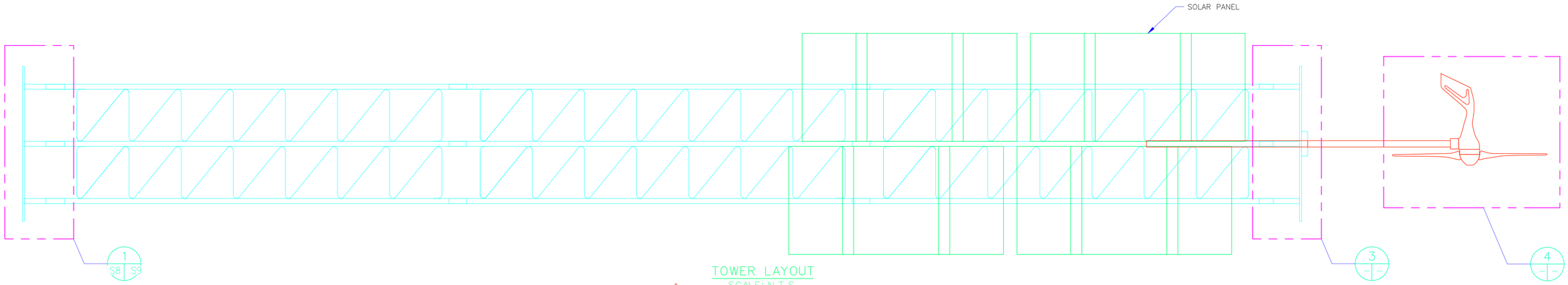

TOWER LAYOUT
SCALE: N.T.S.

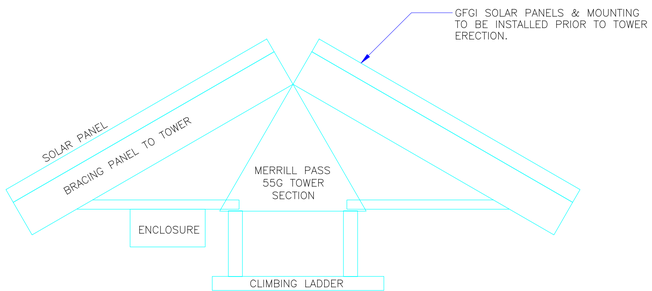

CONCEPT DRAWING
MOUNTING SOLAR PANEL TO ROHN 55G TOWER SECTION
SCALE: N.T.S.

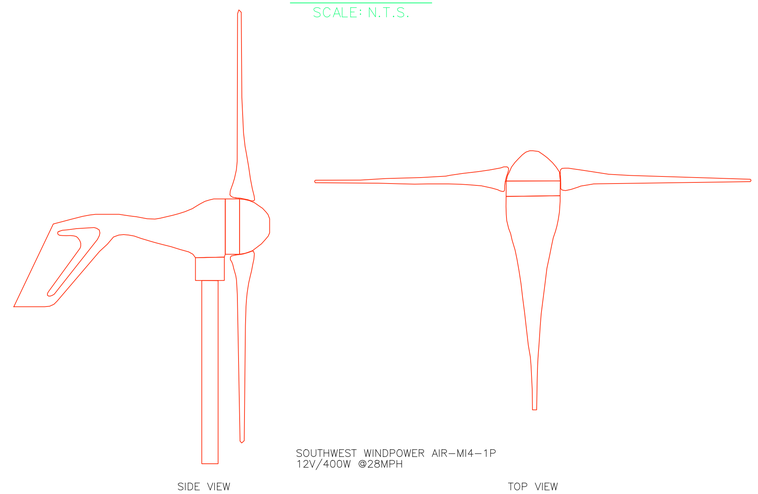

4 WIND GENERATOR
SCALE: N.T.S.

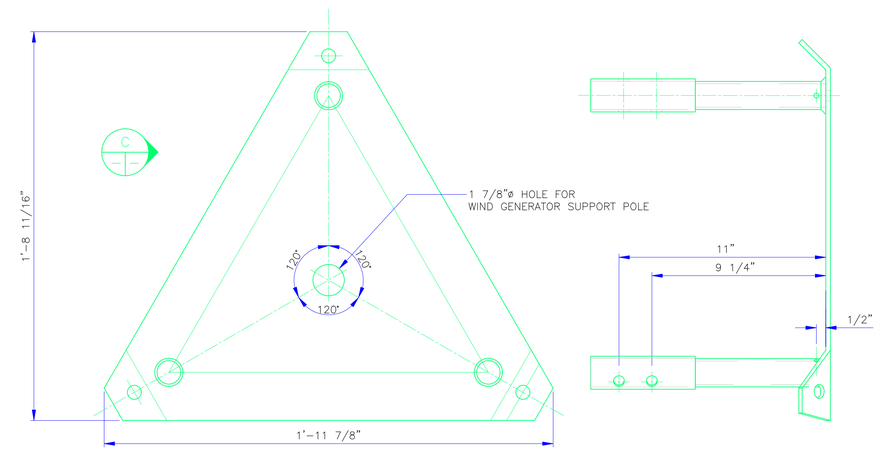

3 NELLO TOWER TOP ASSEMBLY
SCALE: N.T.S.

C VIEW
SCALE: N.T.S.

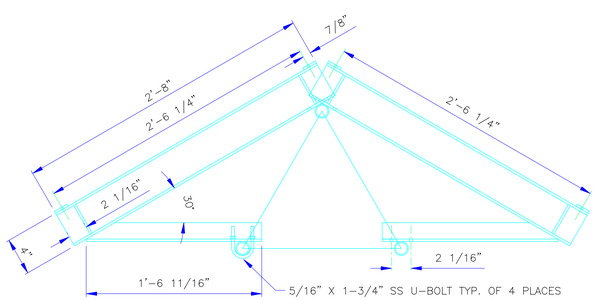

1 S13 S8 1 S9 S8 SOLAR PANEL MOUNTING BRACKET
SCALE: N.T.S.

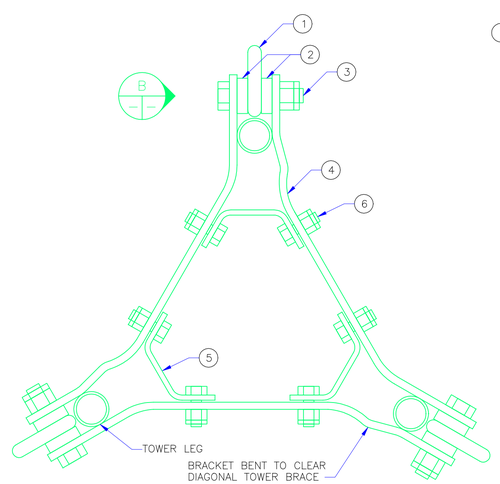

2 S13 S8 2 S9 S8 GUY BRACKET ASSEMBLY
SCALE: N.T.S.

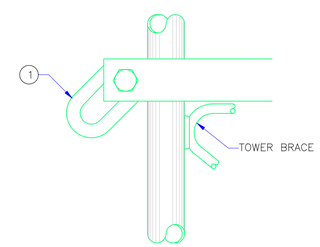

B VIEW
SCALE: N.T.S.

MATERIAL PART LIST

GUY BRACKET ASSEMBLY FOR 55G TOWER
P/N: GA55GD

FIND NO	QTY REQD	U/M	DESCRIPTION
1	3	EA	GUY LINK
2	6	EA	RINGFILL (7/16" THICK)
3	3	EA	BOLT ASSY 3/4" x 3 1/2"
4	3	EA	GUY BRACKET
5	3	EA	INNER BRACKET
6	6	EA	BOLT ASSY 3/8" x 1 1/2"

FOR OFFICIAL USE ONLY

REV	APPROVED DATE	DESCRIPTION	JCN	REDLINE DATE	APVD
A		ESTABLISH SSO			

DEPARTMENT OF TRANSPORTATION
FEDERAL AVIATION ADMINISTRATION
WESTERN SERVICE AREA — ANCHORAGE, AK

SSO

TOWER LAYOUT

VARIOUS — AK

REVIEWED BY
SUBMITTED BY: RJ VASSAR — PROJECT ENGINEER
APPROVED BY: STEVE HOUSER, MANAGER — COMMUNICATIONS ENGINEERING CENTER
DESIGNED
DRAWN
CHECKED
ISSUED BY: TECHNICAL OPERATIONS ENGINEERING SERVICES
DATE
JCN
DRAWING NO: ALD-XXX-S08
REV: A

SHEET NO S-8

ISSUED FOR:

THIS DRAWING PRODUCED ON THE ALASKA REGION MICROSTATION SYSTEM

FILES 5/20/2008 1:36:23 PM ENAMES