APPLICATION		
DASH NO.	NEXT ASSY	USED ON
0001	098360-0101	MKIII
0001	098360-0201	MKIII
0001	098360-0301	MKIII
0001	069066-0002	MK10
0001	069169-0001	MK20

REVISIONS			
REV	DESCRIPTION	DATE	APPROVED
A	FINAL RELEASE PER ERF F6	89/04/18	M.MOORE
B	SHT 2 REVISED NOTE PER ECN 47023 93/07/22 M.MOORE	93/07/27	P. Thatcher
C	SH2- DIM 1/4-20 WAS 5/16-18. N/C SH1, 3 & 4. PER ECN 47536. PER ECN 47536. 931124 BL CLAY	93/11/29	P. Thatcher
D	REVISED EXTENSIVELY. ADDED GNB & POWER AS ADDITIONAL SOURCES PER ECN 48024 94/6/15 P.THOMPSON	94/06/16	P. Thatcher
E	REVISED TABLE II, PARA. 3.2.5. & PARA. 3.5. ADDED PARA. 3.3.7 PER ECN 48156 94/9/13 P.THOMPSON	94/09/14	P. Thatcher
F	SH 10 PWR PART NUMBER WAS TC-12120X PER ECN 48314 95/1/05 P.THOMPSON	95/01/13	Jim Anderson

M95

SPECIFICATION CONTROL DRAWING

WPN 045047-0001 SHOWN

WORD PERFECT FILE

REVISION	F	D	D	D	E	E	E	E	E	F	E
SHEET NO.	1	2	3	4	5	6	7	8	9	10	11

CONT. NO.	
DRAWN/CHECKED BY M.L. Moore	89/4/19
E.E. APPROVAL D.S. Miller	89/4/19
M.E. APPROVAL M.M. Simpson	890419
C.E. APPROVAL A.L. Williams	89 0420
Q.A. APPROVAL	
CONF. MGMT. M.L. Moore	89/4/19
COMP. LOG 4951	

WILCOX WILCOX ELECTRIC, INC.
KANSAS CITY, MISSOURI

BATTERY STORAGE,
(12V, 100 Ah, SEALED)

SIZE	FSCM NO.	DWG. NO.	REV.
A	65597	045047	F

SCALE NONE | FSC 6140 | SHEET 1 OF 11

W-194 (4-89)

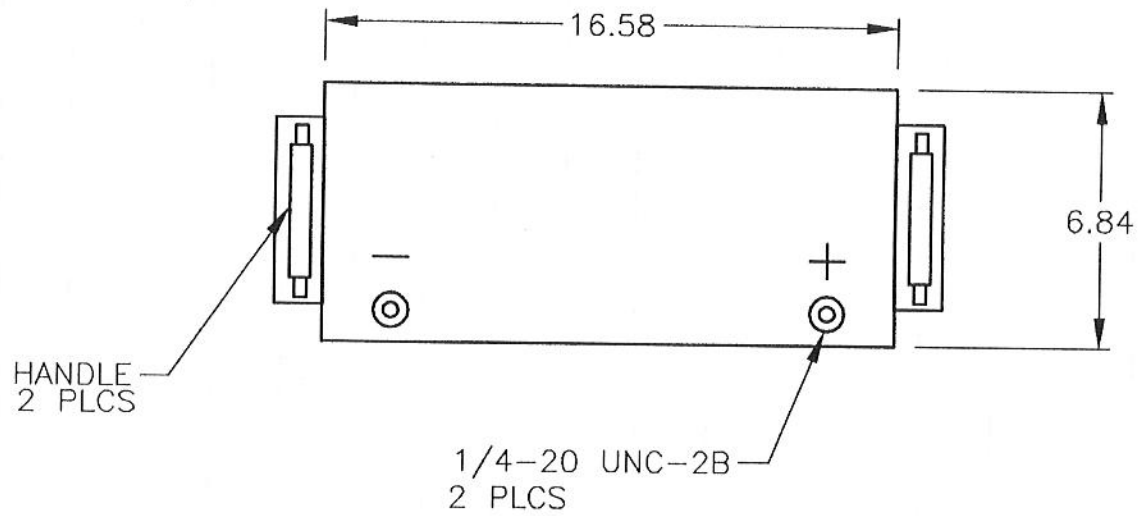

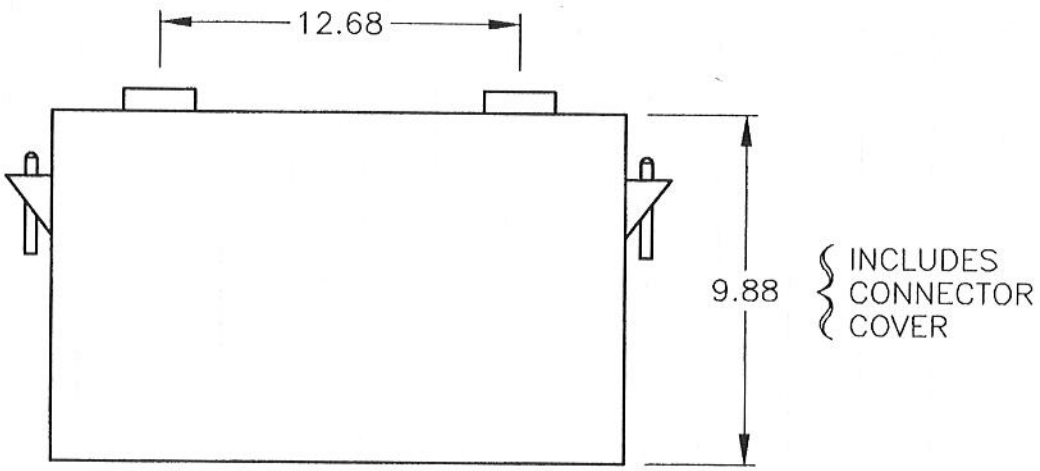

FIGURE 1

[C & D CONFIGURATION]

NOTES:

1) ALL DIMENSIONS ARE IN INCHES, AND ARE NOMINAL.

2) CABLE MOUNTING HARDWARE SUPPLIED- TWO EACH: 1/4-20 X 3/4" CRES BOLTS, CRES FLAT WASHERS.

CAD (AutoCAD) GENERATED DRAWING
DO NOT CHANGE MANUALLY

WILCOX	WILCOX ELECTRIC, INC. KANSAS CITY, MISSOURI	SIZE A	CAGE CODE 65597	DWG NO. 045047	REV D
DRAWN BY BL CLAY	940613			
CONTRACT NO. DTFA01-91-C-00035		SCALE: NONE		SHEET 2

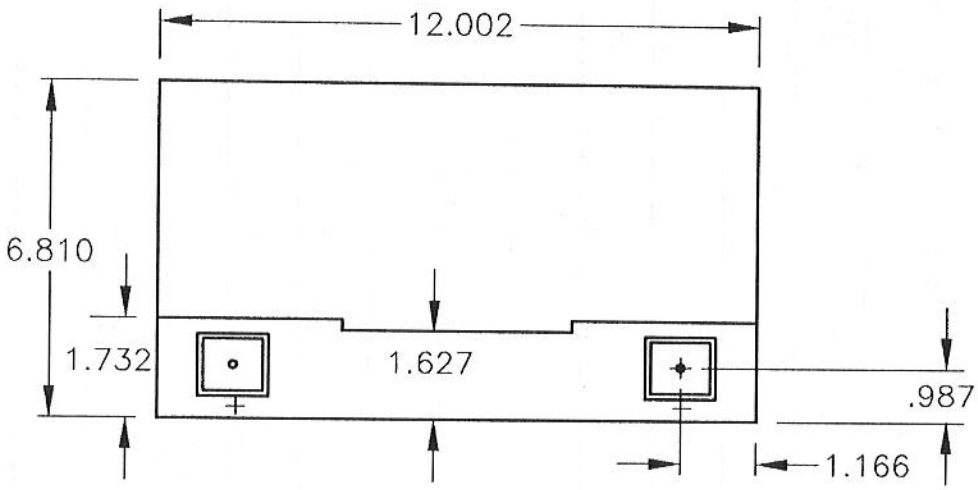

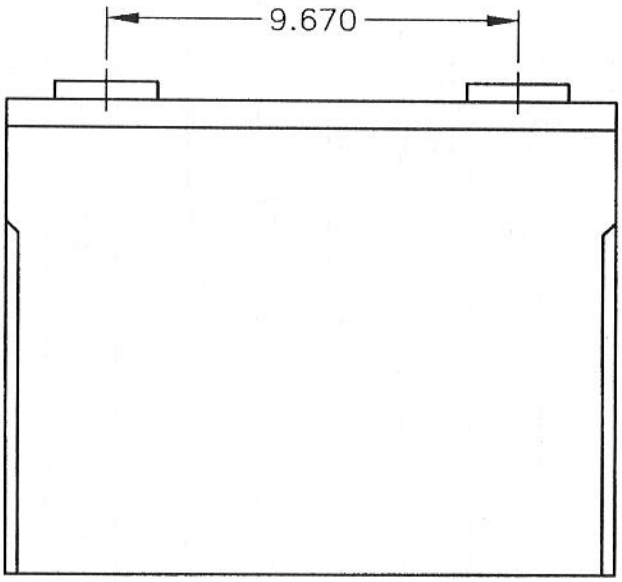

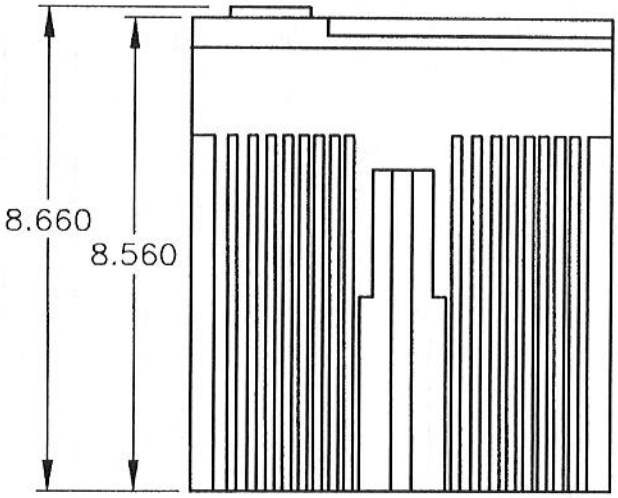

FIGURE 2
[GNB CONFIGURATION]

NOTES:
1) ALL DIMENSIONS ARE IN INCHES, AND ARE NOMINAL.
2) CABLE MOUNTING HARDWARE SUPPLIED– TWO EACH: 1/4"–20 X 3/4" CRES BOLTS, CRES FLAT WASHERS.

ELECTRONICALLY STORED

CAD (AutoCAD) GENERATED DRAWING
DO NOT CHANGE MANUALLY

WILCOX — WILCOX ELECTRIC, INC. KANSAS CITY, MISSOURI	SIZE A	CAGE CODE 65597	DWG NO. 045047 — REV D
DRAWN BY BL CLAY 940613			
CONTRACT NO. DTFA01–91–C–00035	SCALE: NONE		SHEET 3

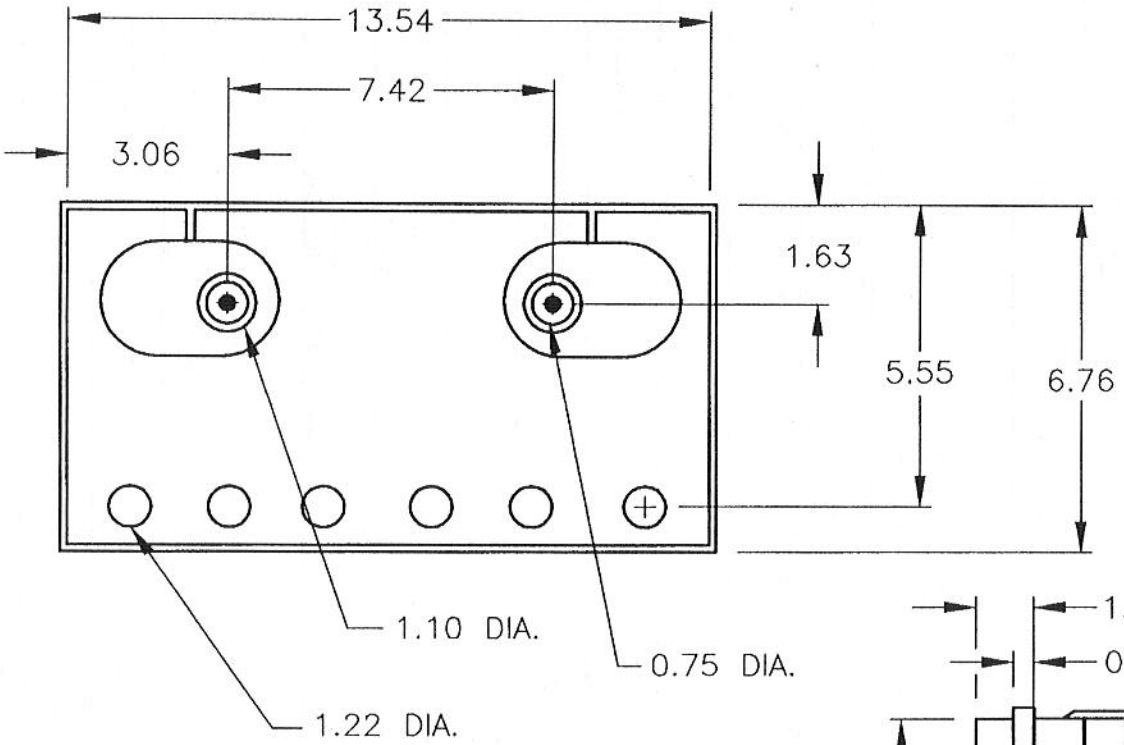

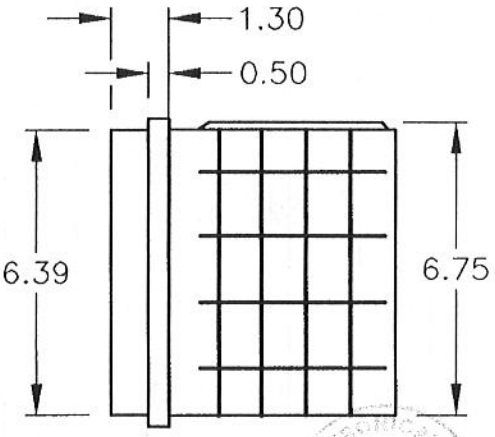

FIGURE 3
[POWER BATTERY CONFIGURATION]

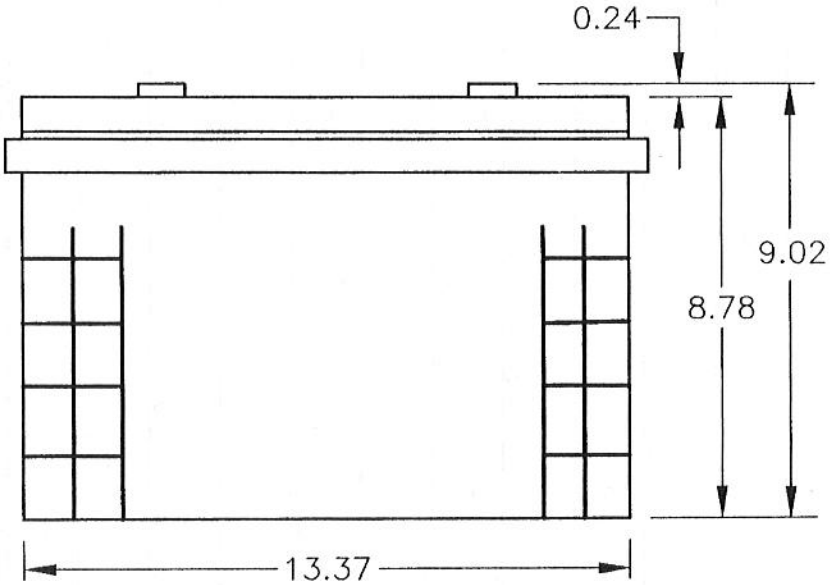

NOTES:
1) ALL DIMENSIONS ARE IN INCHES, AND ARE NOMINAL.

2) CABLE MOUNTING HARDWARE SUPPLIED TWO EACH: 1/4"-20 X 3/4" CRES BOLTS, CRES FLAT WASHERS.

CAD (AutoCAD) GENERATED DRAWING
DO NOT CHANGE MANUALLY

WILCOX	WILCOX ELECTRIC, INC. KANSAS CITY, MISSOURI	SIZE A	CAGE CODE 65597	DWG NO. 045047	REV D
DRAWN BY BL CLAY	940613			
CONTRACT NO. DTFA01-91-C-00035		SCALE: NONE		SHEET 4

1.0 GENERAL: This specification describes the requirements for a Sealed, Absorbed Electrolyte, Lead-Acid-Calcium Storage Battery as defined in FAA Order 6980.24A. The battery, per this specification, is intended to be used in stationary applications to provide emergency or backup power when the primary power fails.

This battery shall conform to the requirements for a TYPE I, CLASS 3, STYLE B battery per FAA Specification FAA-E-2826 (except that useful operating life is 10 years minimum, instead of 20 years) and FAA Order 6980.25B.

1.1 This specification is the controlling document and takes precedence over other documents referenced herein.

2.0 REFERENCED DOCUMENTS:

2.1 Federal Specifications:

FAA-E-2826 Battery, Storage, Lead-Acid.

FAA-ORDER 6980.24A Battery Theory and Selection Guidelines.

FAA-ORDER 6980.25B Maintenance of Batteries for Standby Power.

2.2 Military Specifications:

MIL-I-45208 Inspection System Requirements.

2.3 Referenced documents shall be the issue in effect on date of invitation for bid or as authorized by Wilcox Component Engineering. All requests for deviation should be submitted to Component Engineering via Wilcox Purchasing.

3.0 REQUIREMENTS: The requirements for Wilcox Drawing Number 045047 shall be as follows:

3.1 ELECTRICAL SPECIFICATIONS (@ 25°C):

3.1.1 Nominal Voltage: 12 Volts.

3.1.2 Float Voltage: 2.25 to 2.30 V/C.

3.1.3 Capacity: per Table I.

Table I
AMPERE-HOUR CAPACITY to 10.5 VOLTS

Rate	C&D	GNB	POWER
8 - Hour	105.0 Ah	100.0 Ah	96.0 Ah
20 - Hour	108.0 Ah	110.0 Ah	109.6 Ah

3.1.4 Internal Resistance (fully charged): 0.0037 Ω Nominal.

3.1.5 Discharge Current: per Table II.

Table II
MAXIMUM DISCHARGE CURRENT

Specification	C&D	GNB	POWER
One Minute	700 Amperes	580 Amperes	700 Amperes
Short Circuit	3243 Amperes	2143 Amperes	4182 Amperes

3.1.6 AC Ripple Voltage: 1.5% p-p of Float Voltage (maximum allowable 4% p-p).

3.1.7 Self Discharge Rate: 3% of Capacity/Month.

3.1.8 Specific Gravity: 1.320 Nominal (Fully Charged).

3.2 MECHANICAL SPECIFICATIONS: This part shall be of the design, construction and physical dimensions as specified herein.

3.2.1 Physical Configuration: See Tabulation and Figures 1, 2 or 3.

3.2.2 Number of Cells: 6 per Unit.

ELECTRONICALLY STORED

3.2.3 Terminal Type & Hardware: per Table III.

Table III
TERMINAL DETAILS

Specification	C&D	GNB	POWER
Terminal Type	Threaded Copper Insert	Threaded Copper Insert	Threaded Copper Insert
Terminal Hardware	¼"-20 X 0.75"	¼"-20 X 0.75"	¼"-20 X 0.75"
Terminal Torque Initial: Annual:	 110 IN-LBS 100 IN-LBS	 100 IN-LBS 100 IN-LBS	 120 IN-LBS 115 IN-LBS

3.2.4 Materials and Finishes:

3.2.4.1 Case and Cover: Flame Retardant (per UL-94, V-O) Thermoplastic or Polypropylene.

3.2.4.2 Terminals: Lead Alloy with Threaded Copper Inserts.

3.2.4.3 Plates: Lead Calcium (or Tin) Alloy Grid.

3.2.5 Electrolyte: Non-Spillable, either Immobilized Sulfuric Acid or A.G.M. (Absorbed Glass Mat).

3.2.6 Ventilation System: Permanently Sealed, Pressure Release Safety Vent, per UL924.

3.2.7 Weight: See Tabulation.

3.3 ENVIRONMENTAL SPECIFICATIONS:

3.3.1 Operating Temperature Range: -20°F to +90°F. (-28.89°C to +32.22°C).

3.3.2 Storage Temperature Range: -20°F to +90°F. (-28.89°C to +32.22°C).

3.3.3 Life Expectancy: 10 years @ Full Float @ 25°C.

3.3.4 Battery Disposal: Batteries shall be disposed of by recycling them through commercial battery recyclers. Commercial recyclers include persons who sell batteries at either retail or wholesale, a lead smelter, or a battery recycling facility governed by state and federal regulations.

> **CAUTION**
>
> Since waste lead-acid batteries are *hazardous*, because of the corrosiveness of the acidic electrolyte and the toxicity of the lead components, they shall not be discarded or disposed of in any landfill nor incinerated in any way.

If discarded batteries are to be held for any length of time, they must be properly stored while they await recycling. Proper storage includes not "cracking" the batteries, keeping them off the ground, and storing them in well-ventilated areas. For more information refer to FAA ORDER 6980.25B and Component Engineering component part files.

3.3.5 Storage Interval: Storage intervals between the date of shipment and the date of initial charge shall not exceed six (6) months. Storage at elevated temperatures will result in accelerated rates of self discharge.

ELECTRONICALLY STORED

3.3.6 Battery Life: Combined storage/operating life shall be 10 years minimum. Battery recharging shall be administered every six (6) months minimum; batteries that are stored without proper charge (or charged at incorrect charging intervals or levels) may result in excessive sulphation of the plates, which is detrimental to battery performance and life.

3.3.7 Battery Testing: All batteries shall meet the requirements of the Code of Federal Regulations (CFR) 49, Part 173.159(d), which describes a vibration test and a pressure differential test. Any manufacturer wishing to become qualified to this specification must perform these tests, and submit to Wilcox a written test report documenting successful completion of the tests.

3.4 MARKING: The part shall be marked with the Manufacturer's Name, or identification, and the Manufacturer's Part Number. The terminals shall be clearly marked and identifiable. The marking shall be permanent as the normal life expectancy of the part and shall not become illegible when subjected to solvents normally used to clean contaminants from batteries or battery systems.

3.5 PACKAGING: The parts shall be packaged in a manner that will afford adequate protection against corrosion, deterioration, and physical damage, during shipment to Wilcox. Battery terminals must be protected against inadvertent short circuits. See NOTE 1/.

3.6 WORKMANSHIP: The item(s) furnished under this specification shall be free from blisters, cracks, checks, foreign inclusions, scratches, voids, or any other surface or internal defects which may detrimentally affect the intended use, serviceability, and/or appearance.

4.0 QUALITY ASSURANCE PROVISIONS:

4.1 Wilcox reserves the right to inspect any of the requirements of this specification to determine the acceptability of a lot and to reject nonconforming parts or lot, on the basis of test results obtained.

4.2 The parts procured per this specification shall comply with the requirements stated herein. The supplier shall have Quality Assurance procedures in place necessary to insure compliance to this specification. The supplier shall also comply to MIL-I-45208.

5.0 PROCUREMENT DATA:

5.1 Identification of the Suggested Source(s) of supply hereon is not to be construed as a guarantee of present or continued availability as a source of supply for the item(s).

SUGGESTED SOURCE(S)	SOURCE PART NUMBER
1) C & D Power Systems Plymouth Meeting, PA. 19462 CAGE # 1K126	See Tabulation and NOTE 2/
2) GNB Industrial Battery Company Lombard, IL. 60148 CAGE # 88219	See Tabulation and NOTE 3/
3) Power Battery Company, Inc. Patterson, NJ. 07513 CAGE # 64748	See Tabulation and NOTE 4/

Tabulation

Wilcox Part Number	C&D Part Number	GNB Part Number	PWR Part Number	Figure Number	Weight
045047-0001	LS12-100	--------	--------	1	95.0 lbs
045047-0001	--------	6-MSB-2460	--------	2	76.0 lbs
045047-0001	--------	--------	TC-12120XC	3	80.7 lbs

6.0 NOTES:

1/ Batteries are to be TESTED and FULLY CHARGED (100% Capacity) at time of shipment to Wilcox.

2/ C&D Batteries may be purchased from local C&D representative:
ASH BATTERY SYSTEMS, INC.
Shawnee Mission, KS. 66203

3/ GNB Batteries may be purchased from local GNB representative:
ELECTROREP-ENERGY PRODUCTS, INC.
Raytown, MO. 64133

4/ POWER Batteries may be purchased from local POWER representative:
GLASCO/SUMMERS ELECTRIC SUPPLY CO.
Kansas City, MO. 64108