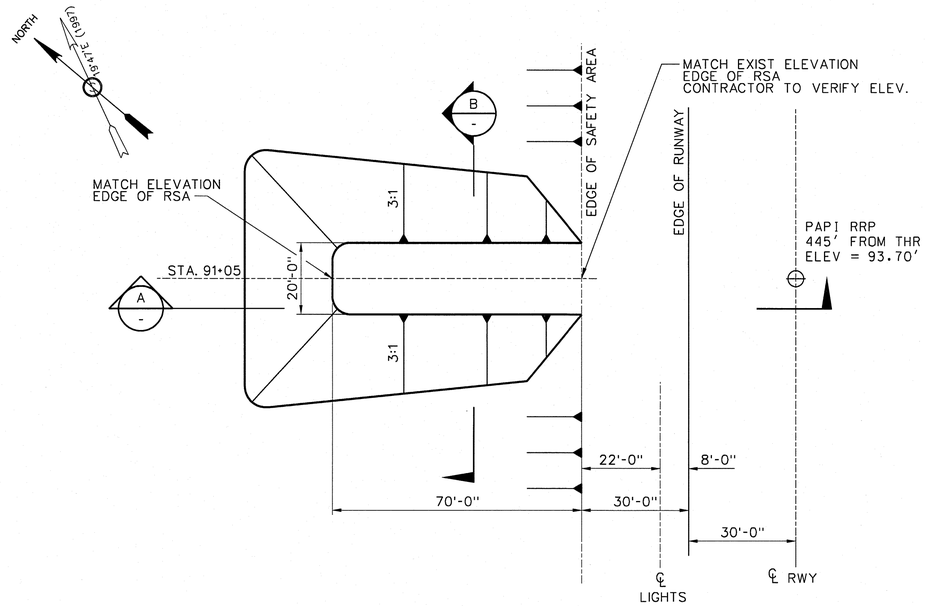

RWY 22 PAPI PAD PLAN
SCALE: 1" = 20'-0"

NOTES:

1. GEOTEXTILE SEPERATION
2. 4" INSULATION BOARD
3. BORROW EMBANKMENT

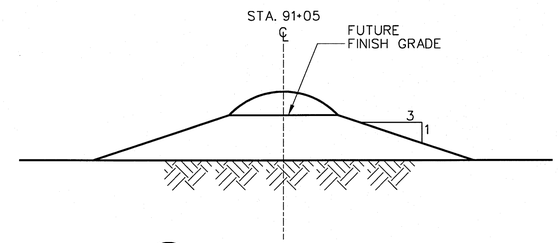

B RWY 22 PAPI PAD SECTION
NOT TO SCALE

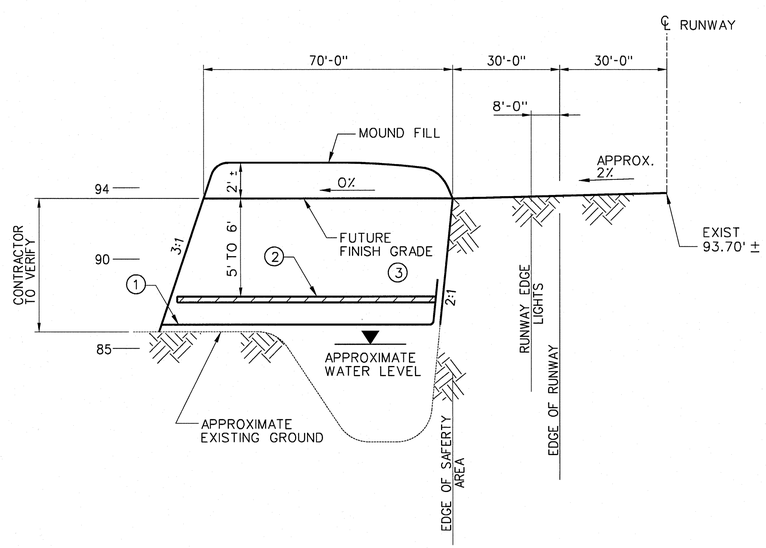

A PAPI PAD SECTION
SCALE: HORZ 1" = 20'
VERT - NOT TO SCALE

20' 0 20' 40'
SCALE: 1" = 20'

PHASE 1

REV	APPROVED DATE	DESCRIPTION	JCN	REDLINE DATE	APVD

DEPARTMENT OF TRANSPORTATION
FEDERAL AVIATION ADMINISTRATION
ATO - TECHNICAL OPERATIONS WESTERN SERVICE AREA

PAPI
R/W 22
PAD PLAN & ELEVATIONS

SELAWIK AK

REVIEWED BY: SB 7/28/09
SUBMITTED BY: James D Wiles
PROJECT ENGINEER
APPROVED BY: [signature]
MGR: ENGINEERING - SEATTLE
DESIGNED
DRAWN
CHECKED: JED
ISSUED BY: ENGINEERING SERVICES NAVAIDS
DATE: 07/28/2009
JCN: 502673
DRAWING NO: WLK-D-PAPI22-C002
REV

CONSTRUCTION

WLK-D-PAPI22-C002.dgn
7/28/2009 11:13:06 AM lori divana