LOGAN INTERNATIONAL AIRPORT
BOSTON, MA

AIRPORT SURVEILLANCE RADAR

UNINTERRUPTIBLE POWER SUPPLY
REPLACEMENT

SPECIFICATIONS
DIVISIONS 1 - 26

For

Federal Aviation Administration
New England Region

By

Boston Implementation Center, AJW-E14D
David Hull
781-238-7813

MARCH 2009

TABLE OF CONTENTS

00 00 00 GENERAL

00 73 19 Safety and Health Requirements

01 11 00 Summary of Work

01 33 00 Submittal Procedures

01 35 43.13 Hazardous Materials

02 00 00 DEMOLITION

02 41 00 Demolition

03 00 00 CONCRETE

03 11 00 Concrete Forming

03 20 00 Concrete Reinforcing

03 30 00 Cast-in-Place Concrete

03 81 00 Concrete Cutting

23 00 00 MECHANICAL

23 00 00 Basic Mechanical Materials and Methods

23 09 00 Control Systems Equipment

23 30 00 HVAC Distribution

23 80 00 Decentralized HVAC Equipment

26 00 00 ELECTRICAL

26 00 01 General Provisions for Government Furnished Equipment (GFE)

26 00 02 Documentation, Testing, and Training Requirements for Government Furnished Equipment (GFE)

26 05 00 Common Work Results for Electrical

26 05 19 Low-Voltage Electrical Power Conductors and Cables

26 05 26 Grounding and Bonding for Electrical Systems

26 05 29 Hangers and Supports For Electrical Systems

26 05 33 Raceway and Boxes for Electrical Systems

26 05 48 Vibration and Seismic Controls for Electrical Systems

26 05 53 Identification for Electrical Systems

26 28 16 Enclosed Switches and Circuit Breakers

26 33 53 Static Uninterruptible Power Supply (UPS)

26 33 54 Resistive Load Bank for Uninterruptible Power Supply (UPS)

31 00 00 EXCAVATION

31 23 00 Excavation and Fill

SECTION 00 73 19 - SAFETY AND HEALTH REQUIRMENTS

PART 1 – GENERAL

1.1 SUMMARY: This section describes the requirements for employee health and safety.

1.2 APPLICABLE PUBLICATIONS – The publications listed below form a part of this specification to the extent referenced. The publications are referred to in the text by basic designation only.

A. Code of Federal Regulations (CFR)

1. OSHA General Industry Safety and Health Standards (29 CFR 1910), Publication V2206; OSHA Construction Industry Standards (29 CFR 1926). One source of these regulations is OSHA Publication 2207, which includes a combination of both parts 1910 and 1926 as they relate to construction safety and health.
2. National Emission Standards for Hazardous Air Pollutants (40 CFR, Part 61)
3. Federal Standard (Fed. Std.)
4. 313A Material Safety Data Sheets, Preparation and the Submission
5. FAA Order No. N 3900.60. Maintenance Project Safety and Health Checklist

This Maintenance Project Safety and Health Checklist shall be reviewed with the Contractor and FAA prior to construction.

1.3 WORK COVERED BY THIS SECTION – This section is applicable to all work covered by this contract.

1.4 DEFINITIONS OF HAZARDOUS MATERIALS – Refer to hazardous and toxic materials/substances included in Subparts H and Z of 29 CFR 1910; and to others as additionally defined in Fed. Std. 313. Those most commonly encountered include asbestos, polychlorinated biphenyl's (PCB's), explosives, and radioactive material, but may include others.

1.5 Quality Assurance

A. Safety Meeting – Representatives of the contractor shall meet with the CO and COTR prior to the start of work, for the purpose of reviewing the contractor's safety and health programs and discussing implementation of all safety and health provisions pertinent to the work to be performed under this contract. The contractor shall be prepared to discuss, in detail, the measures he/she intends to take in order to control any unsafe or unhealthy conditions associated with the work to be performed under the contract. If directed by the COTR, this meeting may be held in conjunction with other meetings, which are scheduled to take place prior to start of work under this contract. The contractor's principal on-site representative(s), the general superintendent, and his/her safety representative(s) shall attend this meeting.

B. Compliance with Regulations – All work, including the handling of hazardous materials shall comply with applicable state and municipal safety and health requirements. Where there is a conflict between applicable regulations, the most stringent shall apply.

C. Contractor's Responsibility – The contractor shall assume full responsibility and liability for compliance with all applicable regulations pertaining to the health and safety of personnel during the execution of the work.

D. Inspections, Tests and Reports – The required inspections, tests, and reports made by the contractor, subcontractors, specially trained technicians, equipment manufacturers, and others as required, shall be at the contractor's expense.

E. Safety Plan – The contractor will be required to submit a safety plan for maintaining a safe work environment for construction workers employed on this project. As a minimum, the plan shall show weekly "tail gate meetings", scheduled inspections of equipment to check for potential hazards created by wear, etc. and a statement that the current OSHA regulations on safety in the construction industry will be followed. The plan will be used by the COTR to insure that the work is accomplished in accordance with safety practices.

F. The COTR may stop any operation, which is in violation of the OSHA standards and fails to comply with the safety plan or accepted safe work practices.

1.6 SUBMITTALS

A. Accident Reporting - A copy of each accident report, which the contractor or subcontractors submit to their insurance carriers, shall be forwarded through the COTR to the CO as soon as possible, but in no case later than 48 hours after the accident occurred, depending on the results of the accident. Refer to AMS clause 3.2.2.3-54, "Preventing Accidents", for additional information.

B. Permits – If hazardous materials are disposed of off site, submit copies of permits from applicable Federal, State, or municipal authorities.

1.7 MATERIALS AND EQUIPMENT – Special facilities, devices, equipment, clothing, and similar items used by the contractor in the execution of work shall comply with the applicable regulations.

1.8 HAZARDOUS MATERIALS – The contractor shall bring to the attention of the COTR any material suspected of being hazardous which is encountered during the execution of work. A determination will be made by the COTR as to whether the contractor shall perform tests, and/or if the material is found hazardous and additional protective measures are needed, a contract change may be required, subject to applicable provisions of this contract.

1.9 STOP WORK ORDERS – If the contractor or subcontractors are notified by the COTR of any noncompliance with the provisions of the contract and the action(s) to be taken, the contractor shall immediately correct the unsafe or unhealthy condition. If the contractor fails to comply promptly, all or

any part of the work may be stopped with a "Stop Work Order". When, in the opinion of the CO, satisfactory corrective action has been taken to correct the unsafe and unhealthy condition, a "start order" will be given immediately. The contractor shall not be allowed any extension of time or compensation for damages by reason of or in connection with such work stoppage.

1.10 PROTECTION – The contractor shall take all necessary precautions to prevent injury to the public, building occupants, or damage to property of others. For the purposes of this contract, the public or building occupants shall include all persons not employed by the contractor or a subcontractor working under their direction.

A. Work shall not be performed in any area occupied by Federal employees unless adequate steps are taken for the protection of the public or Federal employees.

B. Whenever practicable, the work area shall be fenced, barricaded, or otherwise blocked off to prevent unauthorized entry into the work area.

C. Alternate precautions – When the nature of the work prevents isolation of the work area, alternate precautions such as the posting of signs, the use of signal persons, the erection of barricades or similar protection around particularly hazardous operations shall be used as appropriate.

END OF SECTION 00 73 19

SECTION 01 11 00 - SUMMARY OF WORK

PART 1 - GENERAL

1.1 SCOPE

UPS Replacement Scope

The Contractor shall furnish all labor, equipment and materials for installing an Uninterruptible Power Supply (UPS) at the Air Surveillance Radar (ASR) located in Boston, MA. The following items are a brief summary of the project and are provided solely for the purpose of describing the general nature of the work. The contractor is responsible for accomplishing all items of work identified in the applicable drawings, specifications, and provisions of the contract.
In general the work consists of the following:

1. Remove existing UPS system, including but not limited to; UPS, batteries and battery rack, ASCO bypass switch, UPS output disconnect, controls, and associated wires and conduit.
2. Take delivery of and install Government-Furnished new 80 kVA UPS (480V, 3PH), maintenance bypass switch, load bank, batteries and battery rack, controls and accessories, and wires and conduit.
3. Obtain necessary badging to work and/or drive on Logan International Airport. (See requirements in attachment "Appendix A MASSPORT REQUIREMENTS")
4. Provide all temporary services required for construction, including but not limited to; temporary UPS conductors, potable water, sanitary facilities, and a covered dumpster.
5. After the work has been completed, clean up and repair any damage caused by the contractor, his/her employees, or sub-contractors during the installation.
6. Coordinate schedule of work and electrical cutovers with COTR and local authorities.

Bid Alternate #1 HVAC Replacement

The Contractor shall furnish all labor, equipment and materials for replacing two existing 15 ton unitary air conditioning units in the Boston ASR-9 equipment room. The following items are a brief summary of the project and are provided solely for the purpose of describing the general nature of the work. The contractor is responsible for accomplishing all items of work identified in the applicable drawings, specifications, and provisions of the contract.

1. Remove and dispose of the two existing unitary air conditioning units. (ACU-1 and ACU-2)
2. Provide and install two (2) 20 ton unitary air conditioning units.
3. Fit the units to the existing ductwork and air distribution system.
4. Fabricate and install stainless steel drip pans.
5. Units shall be fitted with equipment that allows for low ambient operation.
6. Fabricate and install evaporator and condenser rack for each unit.
7. Provide and install motorized damper for low ambient operation. Damper shall be activated by condenser coil temperature.
8. Units shall be fitted with adjustable high/low refrigerant pressure controls.
9. Fabricate and install 300-grade stainless steel exhaust and intake hoods with bird and insect screens.

10. Install a new intake filter bank for each ACU.
11. Supply three (3) sets of filters for each unit as spare parts.
12. Units shall be fitted with Metasys or equivalent controls system for unit status and high/low refrigerant pressure levels, and current draw.
13. The contractor shall provide electrical work for equipment and controls operation.

1.2 APPLICABLE DOCUMENTS

A. Applicable Documents - All FAA, Military, Federal, and industrial codes or standards, specifications, and contract drawings referenced in this and the following divisions form a part of this specification are applicable only to the extent they were used as a basis of this design. All references to codes, standards, specifications, and construction drawings refer to the latest editions (and any supplements) in effect on the date of the contract.

B. Applicable Publications - The publications listed below form a part of this specification to the extent referenced. The publications are referenced to in the text by basic designation only.
   1. CODE OF FEDERAL REGULATIONS (CFR):
      a. OSHA General Industry Safety and Health Standards (29 CFR 1910), OSHA Construction Industry Standards (29 CFR 1926). OSHA 2202 is a condensed version of 29 CFR 1926. Each is for sale by the Superintendent of Documents, U.S. Government Printing Office, Washington DC 20402.
      b. National Emission Standards for Hazardous Air Pollutants (40 CFR, Part 61).
   2. FEDERAL STANDARD:
      a. Preparation and the Submission of 313A Material Safety Data Sheets.

C. List of Drawings

BOS-700006-G001	COVER SHEET
BOS-700006-G002	INDEX SHEET
BOS-700006-C101	AIRPORT LAYOUT PLAN
BOS-700006-C001	SITE PLAN
BOS-700006-D001	TEMPORARY POWER - DEMOLITION
BOS-700006-D002	UPS REPLACEMENT WORK - DEMOLITION
BOS-700006-D003	UPS REPLACEMENT WORK - EQUIPMENT DEMOLITION
BOS-700006-E001	ONE LINE DIAGRAM
BOS-700006-E002	ELECTRICAL PLAN
BOS-700006-E003	ELEVATIONS
BOS-700006-E004	SHELTER ELEVATIONS
BOS-700006-E005	CONDUIT AND CONDUCTOR SCHEDULE
BOS-700006-E006	UPS AND E/G INTER CONNECTION DIAGRAM
BOS-700006-E008	PANEL SCHEDULES FOR REFERENCE ONLY
BOS-700006-M001	NEW HVAC EQUIPMENT
BOS-700006-M002	EQUIPMENT SCHEDULES

1.3 DEFINITIONS

A. Federal Aviation Administration (FAA) - The terms "Federal Aviation Administration" (FAA) and "Government" as used herein denotes the "owner"

B. Contracting Officer (CO) - The term "Contracting Officer" (CO) as used herein denotes the person designated to act for the Government in the performance of this contract.

C. Contracting Officers Technical Representative (COTR) - The term "Contracting Officers Technical Representative" (COTR) as used herein denotes the representative of the Contracting Officer at the job site. The COTR's authority is limited. These limitations are defined in the Letter of Delegation provided to the COTR and the Contractor at the preconstruction meeting.

D. Contractor and Subcontractor - The term "Contractor" as used herein denotes the firm retained by the FAA to perform and complete work required by the Contract. The term "subcontractor" as used herein denotes the person or firm retained by the Contractor to perform a particular unit of work required by the Contractor. Subcontractors shall be required to meet all specifications required of the Contractor.

E. Furnished Material - The term "furnished material" (GFM) as used herein denotes all Government Furnished Equipment (GFE) and material furnished by the Federal Aviation Administration. Any and all material not listed as "Furnished" shall be supplied by the Contractor. Furnished material is listed in Section 01 11 00, Part 3.3.

1.4 GOVERNMENT FURNISHED EQUIPMENT AND MATERIAL (GFE & GFM)

(Please see Section 01 11 00 "Appendix A.")

1.5 CONSTRUCTION CONDITIONS

A. Preconstruction Conference - The Contractor shall attend a preconstruction conference at the time and location specified by the CO. Local procedures related to ingress, egress and security will be discussed. Requirements for material disposal, security and safety will be discussed. Compliance with these procedures while on site is mandatory.

B. Conflict Resolution - The Contractor shall meet standards, specifications, and drawings as specified herein. The specifications and drawings will rule in all cases. Specifications will govern over drawings. In the event of dimensional discrepancies or omissions, the Contractor shall field verify and correct the information, and the COTR shall render an interpretation and decision.

C. Inspection

1. Access for Inspection - The Contractor shall allow the COTR complete access to all portions of the work. Portions of the work buried, enclosed, or disguised, will be inspected by the COTR before being obscured by the next operation of the Contractor. In all cases, the COTR shall be informed accordingly and given access to the work. Work obscured before inspection and acceptance by the COTR, may, at the option of the COTR be opened for inspection at no additional cost to FAA.

2. Joint Acceptance Inspection - The COTR shall inspect all work after substantial completion including all materials, tools, and equipment. Such inspection may extend to all or a part of

the work for the preparation, fabrication or manufacture of the materials to be used. The COTR shall notify the Contractor of any non-compliance with the contract specifications and/or drawings, and may reject workmanship or materials accordingly. After the COTR reviews the contract documents and verify the Contractor has completed all required work, a Joint Acceptance Inspection (JAI), which is a FAA internal approval process, will be held.

D. Existing Utilities - Subsurface utilities and cables, whose existence is known to FAA, are shown on the contract drawings in approximate locations. Other utilities may not be shown on the contract drawings. The Contractor shall ring out and mark the existing power and control cable runs prior to any construction activities so as to maintain clearances from underground cables during construction. The Contractor shall field verifies the location of underground utilities before excavating cable trenches and concrete foundations. This will be accomplished, in part, by coordinating with the FAA and the COTR.

1. Hand Excavation - Hand excavation methods will be used in locating all existing utilities. Any damage caused by the Contractor will be repaired immediately by the Contractor at no additional cost to FAA. Repairs, if required, will be in accordance with the specifications and conditions stipulated by the COTR.

E. Project Coordination - The Contractor shall be required to coordinate construction activities with the FAA through the COTR. All work, which affects Facilities and Equipment, shall be coordinated and approved by FAA personnel through the COTR twenty-one (21) days in advance of the scheduled work. Failure to notify and obtain the necessary approval may result in a rescheduling of the work. If weather conditions or operations preclude a scheduled shutdown of the FAA facility, the Contractor shall reschedule the work. The Contractor shall be required to coordinate all power shutdowns of existing facilities with the FAA, through the COTR, twenty-one (21) days in advance. Each shutdown for testing or cut-overs will be limited to off-peak hours, with the facility placed back in service at the end of the workday or as stipulated by the FAA. The Contractor shall not be allowed any extension of time or compensation for lack of compliance with this requirement.

F. Layout of Work - The Contractor shall field verify measurements and work from the established base lines and bench marks indicated on the drawings and will be responsible for all measurements in connection therewith. The Contractor will furnish, at his/her own expense, all templates, equipment, tools, materials, and labor as may be required in laying out any part of the work.

G. Permits, Inspection, Licenses, Certificates - The Contractor shall obtain and pay fees for permits, licenses, or certificates required by Federal, State and City/Town officials as necessary to perform the work, prior to starting construction, and in a timely manner to avoid delays in starting the job. The Contractor will abide by all requirements dictated by the municipality for such permits without any additional cost.

H. Compliance with Local and Other Codes - The Contractor shall comply with codes and standards, such as the National Electric Code, latest edition or local code. Where the requirements of the specifications and drawings exceed those codes, the Contractor shall comply with the requirements of the specifications and drawings.

I. Stop Work Orders - When the Contractor or subcontractors are notified by the COTR of any non-compliance with the provisions of the contract and the action(s) to be taken, the Contractor will correct the unsafe or unhealthy condition. Life threatening or other serious violations will be corrected immediately. Non-serious violations will be corrected within 24 hours of the non-compliance notice. The COTR may stop the work with a "stop work order" if the Contractor fails to comply promptly with all or any part of the work being performed. When, in the opinion of the COTR, satisfactory corrective action has been taken to correct the unsafe and unhealthy condition, the Contractor may resume work. The Contractor shall not be allowed any extension of time or compensation for damages by reason of or in connection with such work stoppage.

J. Temporary Facility - The Contractor shall provide and pay for all temporary services and facilities as specified below and as necessary for the proper and expeditious execution of the work. The Contractor shall make, or have made all connections to existing services and sources of supply as necessary and/or indicated and pay all charges for same. The Contractor shall remove all such temporary installations and connections when no longer necessary for the project work.

1. Temporary Water - The Contractor shall make arrangements to furnish a potable water supply for workers and project work, and pay for all temporary water and services, in accordance with OSHA requirements.

2. Temporary Toilets and Sanitation - The Contractor shall provide ample and suitable on-site sanitary conveniences with proper enclosures for the use of the workers and other personnel employed at the site, in accordance with OSHA requirements. Locations will be subject to approval from the COTR. After completion of the work, such conveniences will be promptly removed from the site.

3. Temporary Light and Power - The Contractor shall arrange for, provide and maintain all temporary electric light and power as required throughout the work. The Contractor shall pay all costs for the installation and use of such temporary light and power.

   a. The Contractor shall furnish, install, connect and maintain all the wiring, sockets, lamps, receptacles, switches, feeders, circuit work, etc. necessary to provide temporary artificial illumination and power as required for the performance of all work covered by these specifications or which may be required for safety and for inspection purposes. Contact the local power company, as required.

   b. Prior to the commencement of demolition, the Contractor shall temporarily <u>install a Government Furnished</u> standby Uninterruptible Power Supply of the same quality and capacity as the existing unit to provide critical backup power to the facility during construction. This unit will be mounted in an enclosed "CONEX" box, and shall be placed in a location approved by the Contracting Officer (CO). The temporary unit is rated 208/120VAC 80kVA, and complete with automatic bypass function, distribution panel and capable of delivering the same amount of power as the existing UPS to be removed. All temporary connections to this unit and to the existing electrical distribution system shall be made, and the unit shall be fully operational prior to the demolition/removal of any existing equipment.
      1. Provide off loading equipment to unload GFM UPS system.
      2. Provide temporary cables for all required connections.

3. Perform operational test to include; a load bank test, automatic start/stop, and running continuous for a 15 minute full rating of the UPS. An operational test of the temporary UPS system shall be performed in the presence of the COTR. Demolition shall not commence without the prior approval of the COTR, and not until the operational test of the temporary Uninterruptible power supply is successfully completed. See electrical specification for further details on temporary equipment and testing requirements.

K. Protection of Existing Vegetation, Improvements and Structures - The Contractor shall take all precautions necessary to protect the existing facilities, equipment, buildings, foundations, vegetation, etc., during construction. Any areas damaged by the Contractor or any subcontractors, will be repaired or replaced to their original conditions by the Contractor at no additional cost to FAA. Repairs will be approved by the COTR and will match to original finish. The Contractor shall provide all temporary covers, enclosures, barricades, etc., required to protect the existing facilities.

L. Schedules

1. Project Schedule - The Contractor shall, within ten (10) calendar days from date of award of contract, submit to the CO for approval a practical project schedule. The schedule will show the order in which the Contractor proposes to carry out the work, the date on which he/she shall start the several salient features (including procurement of materials, plant and equipment), night work required including cutovers, and the contemplated dates for completing the work. The schedule shall be in the form of a progress chart of suitable scale to indicate the approximate percentage of work scheduled for completion at any time. The Contractor shall enter on the chart the actual progress at such intervals as directed by the CO. The project schedule shall include milestone schedule for payments. The milestones should be stated with requested reimbursement for each milestone (based upon actual costs, overhead and profit).

2. Progress Schedule - The Contractor, if requested by the CO, shall submit a progress schedule at such intervals as directed by the CO. If the Contractor fails to submit a progress schedule within three (3) business days, the CO may withhold approval of progress payment estimates until the Contractor submits the required progress schedule.

3. Hours of Work - Unless otherwise approved by the COTR, all work shall be based on a standard 8 - hour workday unless longer hours have been approved and accomplished between the hours of 6:00 a.m. to 5:00 p.m. daily, except weekends and Federal holidays. No work is allowed on weekends and Federal holidays unless approved by the CO in writing.

M. Site Access – Access to the site will be via a pre-determined route identified and agreed upon at the preconstruction conference. All Contractor personnel who <u>do not</u> have a license to drive on the airfield shall wait at the gate for escort. All Contractor personnel who <u>do</u> have a Massport badge that authorizes them to drive on the airfield shall wait at the gate and coordinate with the COTR before following procedures to enter and drive on the airfield. The Contractor shall provide all contractor and subcontractor employees working on this project in an aircraft operations area with security badges and/or Contractor Escort required badges to be issued by Massport. Temporary badges shall be issued for personnel that do not have a badge. Under no circumstances shall any personnel enter the airfield without a badge.

N. Special Site Conditions - This Facility is operational any unscheduled loss of power is unacceptable. Electrical power will be available at all times. The disruption of power will only be allowed as a scheduled shutdown with an approved plan, coordinated with the COTR.

O. Equipment and Waste Disposal - The Contractor shall provide on-site covered containers for the collection of construction waste materials, debris and rubbish and periodically remove the aforementioned materials from the site. Any spillage on access and haul routes will be cleaned up immediately. Disposal location to be determined by the Contractor and approved by the COTR. All equipment, materials, spoil, waste and debris removed from the work site and not specified for reuse or identified as salvageable items, or identified as contaminated contents will be disposed of off site in areas authorized by the applicable County, State and/or Local agencies and in accordance with current rules and regulations governing the disposal of such waste. The Contractor will pay disposal fees and miscellaneous charges. Copies of all documentations of the disposal of any hazardous wastes will be submitted in accordance with Section 01 35 43.13.

P. Cleanup - The work site shall be kept clean and orderly during the progress of work.

Q. Final Cleaning - After final inspection, but before final acceptance of the work, all exterior surfaces of the equipment will be cleaned. All debris will be removed from the general site area.

R. As-Builts - The Contractor shall ensure that three sets of full-sized contract drawings, marked to show any deviations, which have been made from the contract drawings, are kept current on a daily basis. The COTR shall initial each deviation or revision. The COTR shall, upon completion of construction, certify the accuracy of the as-built record. This information will then be retained by the COTR (and the FAA) and used to reflect the as-constructed conditions.

S. Warranties - Warranty on installed equipment will be one year for both material and labor. Documentation for the warranties will be provided to the FAA upon completion of the project.

1.6 Sequence of Work

The Contractor shall be required to submit detailed sequence of work for installation of the new UPS and Air handling units (bid alternate #1). The plans shall limit the loss of power to the facility for a maximum of four (4) hours and shall be performed between the hours of midnight and 5:00 a.m. Actual time of work will be dependent on weather conditions. The plans will describe, in detail, all preparatory work, and estimated time required for each event listed in the plans. A list of equipment and quantity and type of personnel will be attached.

A. Suggested Sequence of Work

1. Assumptions
   a. All materials shown on the drawings and the proper personnel will be available at the site as needed.

2. Construction Sequence (Note that some items in each step may be done simultaneously.)
   a. Test temporary UPS on load bank.
   b. Coordinate shutdown with COTR. Perform facility cutover to temporary UPS.
   c. Take Delivery of new 80kVA Uniteruptable Power Supply and associated equipment.
   d. Remove and dispose of existing conduits and cable in area of work, as indicated.

e. Locate and bolt down UPS and associated equipment. (battery cabinet, bus works car, 3-breaker Maintenance Bypass Panel, etc).
f. Rework square duct and circuits to allow for installation of UPS. Coordinate with COTR.
g. Install all circuits (conduit and cable) between UPS and distribution system, as indicted.
h. Connect UPS feeders through UPS output breaker, and to critical power transformer.
i. Coordinate shutdown with COTR.
j. Assist UPS Manufacturer's Representative in the start up, testing, and verification of UPS System, coordinate with COTR.
k. UPS online and operational.
l. Site Cleanup

3. Bid Alternate #1 - Air Handling Unit Replacements Construction Suggested Sequence

a. Install new control system panels and wiring.
b. Shut down ACU-1 and provide temporary cooling as necessary to stabilize equipment room. Run temporary cooling from 11am to 4pm to ensure that temporary cooling will keep equipment room at acceptable temperature. Coordinate with COTR.
c. Disconnect ACU-1 mechanically and electrically.
d. Remove ACU-1 from building and dispose of unit from site.
e. Install new ACU-1. Connect mechanically and electrically.
f. Install new sensors and other accessories.
g. Connect new unit to control system and arrange for factory start-up. Allow new unit to run for a period of at least 12 hours. If run is successful repeat steps 2-7 with ACU-2.

1.7 SAFETY

OSHA and FAA safety standards will be enforced. In keeping with such standards, the Contractor shall, at a minimum, provide:

A. Safety Plan - The Contractor shall have a Safety Plan with the purpose of maintaining a safe working environment for construction workers employed on site. Two (2) copies of the plan shall be submitted to the CO for review and approval. As a minimum, the safety plan shall require weekly "tailgate" meetings, scheduled inspections of equipment which check for potential hazards created by wear, damages, etc. and a statement that the current Occupation Safety and Health Act (OSHA) regulations on safety in the construction industry, OSHA Title 29, Part 1910 and Part 1926, as well as FAA safety regulations, are followed. The plan will be used by the COTR, who is OSHA trained, to insure that the work is accomplished in accordance with accepted safety practices.

B. First Aid and CPR - At least one (1) employee shall have a current certification in First Aid and Cardio-Pulmonary Resuscitation (CPR) and be on the site at all times. Such employee shall be designated to provide first response medical treatment to site personnel in the event of an accident or other medical emergency. The employee shall not be permitted to work on live

electrical circuits or be placed in any other situation, which may endanger or interfere in their ability to provide medical treatment.

C. Trained Personnel - Personnel shall be properly trained in the usage of all equipment for which they will be required to use during the Contract. Documentation or other evidence of training may be requested by the COTR at any time. Personnel without adequate training will be prohibited from using such equipment.

D. Material Safety Data Sheets - The Contractor shall have Material Safety Data Sheets (MSDS) conforming to Federal Standard 313A, written by the manufacturer, for all materials containing chemicals or other substances which may pose a hazard. One (1) copy of each MSDS will be submitted to the CO and one (1) copy of each MSDS will be kept on file at the job site at all times. The Contractor and subcontractors shall be prohibited from handling any material, which does not have an applicable MSDS on file at the site until such MSDS arrives on site.

E. Safety Equipment - The Contractor shall provide safety equipment including, but not limited to, a Red Cross approved First-Aid kit and the appropriate number of annually inspected, charged, fire extinguishers with the proper NFPA rating.

F. HAZCOM Program - The Contractor shall have a hazard communications (HAZCOM) program. The Contractor and each subcontractor shall submit a copy of their HAZCOM program as well as a copy of their current OSHA 200 form, if requested.

G. Designated Foreman - When any construction activity is conducted at the site, the presence of a designated, competent, badged contractor's foreman is required at the job site. The foreman must be qualified and capable of organizing and coordinating all activities of the Contractor and his subcontractors, and keeping a safe job site.

H. Work Force - The Contractor shall at all times, when construction activities are conducted, have a substantial number of workers for each task to proceed expeditiously and without generating delay, for lack of man-power.

PART 2 - MATERIALS AND EQUIPMENT

2.1 FAA/GOVERNMENT-FURNISHED EQUIPMENT/MATERIAL

A. General - The Contractor shall be responsible for inventory of the items indicated on the material list, transportation of material to the work site, and storage at the work site. All furnished material shall be made available to the Contractor within 30 days of a request. Partial transfers of furnished material shall not be made.

B. Inventory - The Contractor, with COTR oversight, shall inventory the furnished material and indicate the quantities received in the space provided on the furnished material list. The furnished material list shall be used as the property transferal document and shall be certified by the Contractor and the COTR at the time of transfer.

C. Delivery to Site - Delivery of furnished material to the site will be by others. The on-site storage location of the material will be provided at the preconstruction conference. The Contractor shall arrange for receiving the government furnished equipment. The GFM will be delivered via a

shipping company, who shall be responsible for delivering and unloading the UPS and associated equipment to inside the shelter. The contractor personnel shall assist as needed in the unloading process. The temporary UPS system will be delivered as one unit in a "CONEX" box, the contractor shall provide equipment and unload the temporary GFM.

2.2 CONTRACTOR-FURNISHED MATERIAL AND EQUIPMENT

A. Material Deliveries - All material deliveries made under this contract shall be arranged for delivery to the Contractor's material staging area. This area shall be located as determined at the preconstruction conference. Delivery vehicles shall be directed to the material staging area.

B. Storage and Protection - The Contractor, through the COTR, shall secure from FAA all necessary clearances for storage areas on site, including any time limitations upon the use of such areas. The storage and protection of Contractor material will be the sole responsibility of the Contractor. The Contractor shall provide at his/her own expense all fencing, shelters and security personnel as may be necessary for the protection of the material and equipment.

PART 3 - EXECUTION

3.1 WORK SEQUENCE

A. Work shall be performed in the following sequence:

1. FAA shall provide the Contractor with all necessary shop drawings, product data, and samples for all Government furnished equipment.

2. The Contractor shall submit all required product information, shop drawings, and samples as required in the specifications. Protective device time current characteristic curves will be those for the equipment being furnished. Alternate protective devices will be submitted for approval.

3. The Contractor shall install all new equipment in accordance with the construction documents. The Contractor is responsible for handling, storing, and installing all furnished and non-furnished equipment.

4. Two weeks prior to the completion of the installation, the Contractor shall coordinate with the COTR for a factory representative to perform field quality control, testing, and commissioning of all equipment,

5. Upon completion of installation and testing of the completed systems, inspect all system components. Remove any paint splatters and other spots, dirt, and debris. Touch up scratches and mars of finishes to match original finishes. Clean components internally using methods and materials recommended by equipment manufacturers.

3.2 CONTRACTOR USE OF PREMISES

A. General - During the construction period the Contractor shall have full use of the premises for construction operations, including use of the site. The Contractor's use of the premises is limited only by the Government’s right to perform work or to retain other contractors on portions of the Project.

B. Use of the Site - Limit use of the premises to work in areas indicated. Confine operations to areas within contract limits indicated. Do not disturb portions of the site beyond the areas in which the Work is indicated.

1. Driveways and Entrances: Keep driveways and entrances serving the premises clear and available to the Government, the Government's employees, and emergency vehicles at all times. Do not use these areas for parking or storage of materials. Schedule deliveries to minimize space and time requirements for storage of materials and equipment on-site.

C. Use of the Existing Building - Maintain the existing Facility Building in a weathertight condition throughout the construction period. Repair damage caused by construction operations. Take all precautions necessary to protect the building during the construction period.

3.3 GOVERNMENT-FURNISHED EQUIPMENT / MATERIAL

A. The FAA shall furnish the items as identified in Appendix A. The Work includes providing support systems to receive FAA equipment, and connections.

1. FAA shall arrange for and deliver necessary shop drawings, and product data, to the Contractor. The Contractor shall review shop drawings and product data and return them to the COTR noting discrepancies or problems anticipated in use of the product.

2. The Contractor shall arrange for delivery of furnished equipment according to the Contractor's Construction Schedule. The Contractor shall request delivery of the materials in writing to the CO and the COTR 21 calendar days prior to the requested delivery date.

3. The Contractor is responsible for receiving, storing and securing furnished items at the site.

4. The Contractor is responsible for protecting furnished items from damage, including damage from exposure to the elements. The Contractor shall repair or replace items damaged as a result of their operations, at no additional cost to the FAA.

5. The Contractor shall provide protection for the GFE and associated equipment from the weather, dust, and physical damage. The Contractor is liable for all damage while transporting or handling the units and associated equipment until final inspection and acceptance by the FAA.

6. At the site, the COTR and Contractor shall jointly inspect items for damage.

7. The Contractor shall inventory all furnished items within 3 days of receipt. Information shall be submitted to COTR for verification. Items not identified as missing during inventory will become the responsibility of the Contractor to provide at their expense.

8. Materials and equipment furnished by the government in excess of that required will be returned to the government upon completion of the installation.

9. Furnished items identified by the contractor (during the inventory process) as damaged, defective, or missing, will be replaced by the FAA.

10. The contractor shall follow thoroughly the installation manuals for each piece of equipment. Conduit entries to the UPS shall be made from the top. The UPS shall be moved so as not to cause any damage to the unit or injury to personnel.

11. The Contractor shall provide a two-week advance notice to the COTR for the Manufacturer's Representative inspection, startup and testing.

12. Contractor shall notify the COTR when the UPS system installation is complete and ready for startup. The Manufacturer's Representative shall be scheduled by the FAA to inspect the installation, energize, and test the completed System in accordance with the Manufacturer's and FAA approved site acceptance test. The Contractor WILL NOT operate or energize any equipment without expressed direction from the COTR.

13. The contractor shall have a qualified installer available during the startup and testing of the UPS System to perform any further adjustments related to the contract installation. The inspection, startup and testing shall require a minimum of a 32 hours and shall demonstrate that the Facility equipment is operational with the UPS in the electrical distribution system. All test data will be recorded and provided to the COTR.

APPENDIX A

FAA/Government Furnished Equipment/Material List

#	Item Description	Part Number	Received	Quantity
1	UPS 80kVA 3 Phase 480/480V (CLIN 002E)	Powerware 9390		1
2	Battery Cabinets, includes VLRA Batteries (CLIN 003B)	Model 550		1
3	Maintenance Bypass Panel: includes (3) Kirk Keys Interlocks (CLINs 006E, 008)	Eaton PRL4B		1
4	Battery Voltage Monitor (CLIN 009A)	BVM-40		1
5	Remote Monitor Alarm Panel (CLIN 010)			1
6	Stationary Load Bank 480VAC 66-80kVA (CLIN 012MS)	Simplex Polaris		1
7	Battery Maintenance Lift (CLIN 003O)	Medium Duty		1
8	Spare Parts Kits (CLIN 021B)	9390 80kVA		1
9	Temporary UPS System, 80kVA 208/120VAC	TBD		1

The contractor and COTR shall verify the inventory of the UPS (listed as 1-8 above and their respective BOM) within 3 days of delivery. Any discrepancies shall immediately be identified to the FAA Project Manager through the COTR in writing. Items not identified, and found to be missing during the course of installation will become the responsibility of the Contractor at no additional cost to the Government.

CERTIFICATION OF PROPERTY TRANSFER TO CONTRACTOR
MATERIAL(S) AS LISTED ABOVE

DATE TRANSFERRED_____

ITEM #(S)_____

COTR/CO _____
SIGNATURE
CONTRACTOR _____
SIGNATURE

Excess Property:

Upon completion of all work under these specifications, the Contractor, together with the COTR, shall list the excess Government material in the space provided below. Both the Contractor and the COTR shall certify the quantity of excess material listed. In addition, the Contractor shall perform the following with respect to residual furnished material:

Item #	Item Description	Quantity	Received	Remarks
1	80kVA UPS System	1		
2	Batteries and Battery Rack	1		
3	ASCO Bypass Switch	1		
4	UPS Output Fused Disconnect	1		
5	Load bank Disconnect	1		
6	175Amp Fuses	12		
	Bid Alternate #1			
1	Air Handling Units	2		
2	AHU Disconnects	2		
3	Hoods	4		

CERTIFICATION OF EXCESS MATERIAL

The undersigned hereby acknowledge transfer of excess materials in the quantities and condition noted:

COTR/CO_____ _____
SIGNATURE DATE TRANSFERRED

CONTRACTOR_____ _____
SIGNATURE DATE RECEIVED

END OF SECTION 01 11 00

APPENDIX A

MASSPORT REQUIREMENTS - SUPPLEMENTARY GENERAL CONDITIONS

PROJECT ITEM 1

SUPPLEMENTARY GENERAL CONDITIONS

1-1.1 ACCESS FOR CONSTRUCTION AND PAVEMENT SWEEPING

Access to the construction area will be as shown on the Drawings. The Contractor is advised that his/her vehicles, subcontractor's vehicles and supplier's vehicles are restricted from using any City of Boston streets (Neptune Road, Maverick Street and Porter Street) for travel to and from the airport. This regulation will be enforced and the Contractor shall so notify the appropriate parties.

Trucks loaded in the construction area shall have loads trimmed and covered as necessary to assure that no particles, stones, or debris will fall off.

All paved haul roads or access roads shall be kept clean at all times to prevent the accumulation of dirt and mud and the generation of dust by sweeping, washing or other methods directed by MASSPORT. Unpaved haul roads shall be maintained by blading and filling when directed by MASSPORT and dust shall be controlled at all times.

The Contractor shall have immediate access to, while the construction under this contract is in progress, a minimum of one self-propelled, self-contained vacuum sweepers with not less than a 10-foot broom and not less than 4 cubic yards capacity, approved by MASSPORT. The sweeper shall operate as necessary to keep active aircraft pavements, access roads and the work areas clean. At the close of each day's work, all active aircraft pavements and airport paved roads, including ramps to and from highways, used or dirtied by the Contractor shall again be swept. The Contractor is required to have a minimum of one sweeper with a dedicated operator on site during all work hours. A dedicated operator is defined as a person solely assigned to the sweeper with no splitting of time between another piece of equipment.

If in the Contractors opinion, sweepers are not needed for a portion of work, the Contractor may submit a request for waiver of the sweeper requirements in writing to Massport no less than 48 hours in advance of the work. The minimum requirement of one on-site sweeper with dedicated operator, may be waived, if in the opinion of MASSPORT, construction activities for a particular day or portion of a day, do not require the use of a sweeper.

No separate payment will be made for the construction, repair, sweeping and maintenance of haul and access roads, and all costs thereof shall be included in the contract prices for the various items of work in the Proposal.

1-2.1 CONTRACTOR IDENTIFICATION FOR AIRPORT WORK

The Contractor shall provide all contractor and subcontractor employees working on this project in an aircraft operations area with security badges and/or Contractor Escort required badges to be issued by the Public Safety Department of the Authority's Aviation Division. The Contractor must submit complete, proper applications at least three (3) weeks in advance of actual need. Security badge applications and vehicle permits shall be submitted to the Authority's Engineer with justification as to need. All requests are to be reviewed by the Authority's Project Manager and subject to training and testing. The Contractor shall issue one badge to each employee and shall maintain a record of the name and Social Security number of the individual to whom it has been issued. The employee shall be required to display the badge at all times he/she is on the security side of the airport. Airport security areas are defined as all areas within the security fence. Any visitors to the Contractor's field office need not be issued badges as long as the visitor is escorted by person with a security badge. Failure to comply with this provision shall constitute a violation of the General Rules and Regulations for Logan International Airport and shall be subject to the penalty set forth for each violation. All security badges shall be carefully controlled. The Authority may at its discretion audit the records of the Contractor to verify the accountability of the badges. The Contractor shall return all badges issued to him/her to the MASSPORT Project Manager. Badges returned elsewhere shall be considered lost. The Contractor shall pay to the Authority a sum of money to be determined by Public Safety Department for every badge not returned to the Authority at the completion of the work or for any badge found missing at an audit. Lost or missing badges shall be reported immediately to the Authority's Project Manager and the Public Safety Department.

All employees of the contractor or subcontractor needing unrestricted access to security areas at Logan International Airport must first be trained by the Authority's Aviation Operations Department and thereafter obtain security clearance from MASSPORT." The background check and execution of the form is the responsibility of the Contractor and should be forwarded to the Authority's Project Manager for processing. Unrestricted access will be given to Contractor supervisory personnel only, and the Contractor shall schedule work accordingly.

Any Contractor not conforming to these requirements will be considered in direct violation of the FAA approved Logan International Airport Security Program and the work will be stopped until approval is given by the Public Safety Officer to once again start. No time extension for the contract will be given nor will there be any consideration for extra cost claims relative to security violations. It is the responsibility of the Contractor to instruct, monitor and supervise work staff so that violations never occur.

No separate payment will be made for this identification program, the cost of which is considered a subsidiary part of the contract.

1-3.1 EMPLOYEES AND VEHICLE TRAFFIC CONTROL BY THE CONTRACTOR

As indicated on the Drawings, access from the public streets to the Contractor's work area permits entry of vehicles to aircraft pavement that will be in use as required for the normal operation of the airport. It is necessary that the Contractor maintain tight control of all vehicles entering the airport destined for or leaving his work area. All vehicles must have printed clearly on each side the Company name and telephone number.

Security measures at the airport will require that the Contractor park only those work vehicles and equipment required for construction within the secured areas of the airport at the North Campsite area. Contractor employee personal cars will not be permitted within the secured areas of the airport or the North Campsite. The Contractor, as a subsidiary obligation, shall provide adequate and safe transportation for his/her employees from outside the secured area of the airport to the North Campsite and to the work area. Employees and drivers of work vehicles shall be instructed as to proper access roads and shall be cautioned that unauthorized use of aircraft pavements or other areas outside the designated work area may lead to their arrest and subsequent payment of fines. Extra construction vehicles needed at the work site will require temporary escort permits as required by the Authority.

The Contractor shall provide signs to properly direct his/her employees and delivery trucks to the proper field office area. There shall be a person on duty in the Contractor's Field Office during all hours materials may be delivered to properly escort vehicles to their destination.

The Contractor shall assure that all vehicles without permits needing to enter the airfield for construction purposes are escorted by approved radio escort vehicles to the work area. The Contractor shall provide adequate security adjacent to the North Gate to properly identify, regulate and direct all construction vehicles during all work hours of the project. Costs incurred by the Contractor for the above shall be considered incidental to the various project items of the Contract.

All orders for material issued by the Contractor or his Subcontractors shall instruct the supplier of the procedures to be followed.

All vehicles destined to or from the campsite or work area shall be escorted by a Contractor's vehicle specifically assigned for the purpose. Workmen shall be transported from a pre-determined assembly area to and from the work area by properly equipped Contractor's escort vehicles.

The Contractor shall provide a minimum of one radio escort vehicle at all times and shall also provide at least one licensed radio escort driver with Massport Aerodrome Vehicle Operators Permits for the duration of the contract. The one radio escort driver must have, as a minimum, a red Class 3 (three) aerodrome licence.

Each Contractor's escort vehicle shall be equipped with a yellow flashing light and a 3-foot square flag consisting of international orange and white squares not less than one foot square displayed in full view above the vehicles.

A Contractor's escort vehicle will accompany vehicles on all trips to and from the work area and all other vehicles making airside trips to other areas of the airport.

The Contractor shall submit to MASSPORT within 10 days after signing of the contract a written method of operations detailing the precautions s/he proposes for the control of vehicle traffic including Flag people, signs, escorts and any other measures s/he proposes. No work shall start until this operations plan is approved by the Authority Engineering Department and the Authority Aviation Operations Department. No contract time extensions or claims for extra costs will be allowed because of the Contractor's inability to get approval for his/her operations plan. If the Contractor submits a reasonable vehicular traffic control plan based on Authority rules and regulations given to him/her by the Authority and these Specifications, there will be no approval delays.

If any of the Contractor's employees violate the airport's security or driving rules and regulations, they will be cited by the Authority, the employee may be arrested, fined and banned from the airport secured areas for the duration of the project. If there are delays in the Contractor's work schedule because of this action, the Authority will not consider any time extensions or claims for extra costs. It is the Contractor's responsibility to provide qualified, responsible and experienced personnel so that violations do not occur.

If more than two employees are banned from working on the secured areas of the airport, work will be subject to shut down until the Contractor can prove to the Public Safety Officer that s/he has retrained his/her forces to work safely and within the rules and regulations of the Authority. No time extensions or claims for extra costs will be considered by the Authority for this type of delay caused by the Contractor's forces. It is the Contractor's responsibility to properly instruct his employees and to assign responsible employees to this project who take direction, are courteous to the Authority staff operating the airport and recognize the importance of working safely within the secured areas of the Airport.

1-4.1 STORAGE AREA AND EQUIPMENT YARD

The areas for the location of the Contractor's Field Offices, for storing materials and for servicing, repairing and parking construction equipment are located in secured areas as shown on the Drawings. All materials to be used in the work shall be stored in these secured areas. The Contractor's attention is alerted to the fact that a limited amount of area is available within the designated areas and that exact limits will be approved by MASSPORT.

The Contractor will be permitted to store equipment needed for the immediate work on hand adjacent to the work area as approved by MASSPORT. When approved by MASSPORT, low profile equipment and temporary stockpiles for materials to be re-used during construction will be permitted to remain overnight or weekends or at other times the work is not proceeding subject to the following restrictions:

No storage within 200 feet of a runway centerline or 125 feet of a taxiway centerline or within the limits of active runway approach zones.

No storage within 100 feet of wetland/coastal buffer zone.

No storage within critical area of any FAA Navigational Aid (coordinate through local FAA Facilities Maintenance Office).

All equipment booms shall be lowered at the close of each day's work or when stored.

Equipment or materials stored in the field shall be located as directed by MASSPORT and approved by MPA operations where it will not interfere with any airport operation or the operations of any other Contractors work on the airfield.

Equipment not immediately being used shall be stored in the area designated on the Drawings as Contractor's Field Office and Storage area. The Authority will not be responsible for any vandalized equipment or material stored on the Airport property.

Any area occupied by the Contractor shall be maintained in a clean and orderly condition satisfactory to MASSPORT. Particular attention shall be given to the elimination of combustible rubbish or debris in the areas and none shall be left exposed overnight or at other periods of time the work is shut down.

Contractor shall remove all debris from the work site and the Contractor's staging area daily. Failure to do so shall result in a $1,000.00 per day fine until removed to the satisfaction of MASSPORT.

No separate payment will be made for the establishment of the Contractor's storage area and equipment yard or for any costs in connection with its maintenance. This work is considered a subsidiary obligation of the Contractor and shall be included in the contract prices for the various items.

1-5.1 DISPOSAL OF MATERIALS

All unsuitable materials excavated, or removed for purposes of constructing the project will be immediately and legally disposed of off airport property. MPA dumpsters are not to be used by the Contractor for disposal. With prior approval by MASSPORT, the Contractor may temporarily store unsuitable material at the North Campsite in an area designated by MASSPORT. The Contractor shall remove and legally dispose of offsite all unsuitable material from the work site and the Contractor's staging area daily. **Failure to do so shall result in a $1000 per day fine and monthly partial payments not being processed until such time that the unsuitable material is removed to the satisfaction of MASSPORT.**

Suitable materials may be stockpiled on airport property to heights not exceeding 5 feet when prior approval is obtained from MASSPORT. Suitable stockpiled materials may then be used for future projects in the construction of airfield pavement sections and embankments. No extra payment shall be made for stockpile storage within airport property limits or offsite disposal of suitable materials.

The definition of suitable and unsuitable materials are as follows:

Suitable Material - Suitable materials shall be granular materials suitable to use in the construction of pavements subject to the approval of MASSPORT.

Unsuitable Material - All materials not meeting the definition stated above shall be considered unsuitable. Unsuitable materials include, but are not limited to, bituminous concrete pavement, cement concrete pavement, masonry and concrete structures, all utility pipes, duct banks, cables, and any other debris which may be generated during construction activities.

MASSPORT shall determine the suitability or unsuitability of all materials. No separate payment will be made for stockpiling and then using the stockpiled material as suitable material for the project when stockpiling is done in an area within the airport property limits.

1-6.1 AIRPORT OPERATION AND SAFETY REQUIREMENTS

Normal airport operations will be conducted on the airfield during construction and the work shall be carried on in such a manner as not to interfere with the necessary operation of the airport. The Contractor shall take all precautions necessary to insure the safety of operating aircraft as well as his/her own equipment and personnel.

No construction or disposal area operations shall be carried on within 125 feet from the centerline of any active taxiway or within 200 feet of the centerline of any active runway or within the limits of active runway approach zones. When permission has been granted to work inside these limits, no equipment shall be left within the lines when not actually working. During lunch hour or other breaks in the daily work schedule, nights, weekends and the days when work is not permitted or is not progressing, the equipment shall be located outside of these restriction lines. All booms shall be lowered when the equipment is not in operation. Booms that cannot be lowered shall be stored where directed by MASSPORT. All booms shall be equipped with standard FAA obstruction lights which shall be lighted at all times. No construction operations including an open flame, such as welding or burning, shall be carried on near any aircraft.

The Contractor shall obey all instructions as to the operation and routes to be taken by equipment traveling on Airport property. Any signs, lights, signals, markings, traffic control and other devices which may be required by the Authority shall be provided and maintained by the Contractor during the course of the work, subject to the approval of MASSPORT. No aircraft pavement or navigation aid currently lighted shall be left unlighted overnight unless closed to all airport operations. The Contractor shall check all temporary lighting to assure its operating condition before leaving the job each day.

The Contractor shall stake and permanently mark on the ground with a readily recognizable marking (football field marking or similar material) the restriction lines parallel to the taxiways and runways adjacent to the work and the approach zone limits so that workmen can readily recognize the limitations.

The Contractor shall coordinate his/her work with MASSPORT so that no less than 48 hours notice will be given before he starts work in any area. No trenches or other excavation shall be left open within the safety areas of any aircraft pavement if the facility is to be released for use by aircraft when the Contractor's operations stop for the day.

Vehicles will be permitted to cross intersecting active runways or taxiways only when such operations have been approved in advance and then only when the crossings are controlled with a radio vehicle on one side and a flagperson on the other side.

The Contractor vehicles will be permitted to use the existing service road across the approach to Runways 4R, 33L, 27, 33R, 22L, 22R and 15L in clear weather when approved by MASSPORT. Material delivery trucks shall be escorted. When the weather degrades so that the line of sight is lost to the tower or visibility degrades to 1 mile with a ceiling of 500 feet, based on National Weather Bureau observations, the Contractor, shall work only with the approval of MASSPORT. The Contractor shall also cease work if the FAA and MPA operations determines that any other condition warrants shutting down construction. Such shutdown shall not be considered a valid reason for any claim for extra compensation by the Contractor.

1-7.1 RADIO CONTROL, FLAGPEOPLE, GATE GUARD, AND SIGNS

Radio Control. Radio control of construction operations will be required when the Contractor is crossing an active runway or taxiway or is working on a closed runway or taxiway subject to recall.

The Contractor shall have on the site at all times a minimum of three radio-equipped vehicles with operators who shall monitor the radio during all working hours. The radio vehicles shall each have a two-way radio on the FAA frequency. The vehicles shall also be equipped with a two-way radio on the Massachusetts Port Authority frequencies. The Contractor's superintendent shall have on site at all times a portable 2-way radio on the Massachusetts Port Authority frequencies. The radios shall be monitored by the superintendent at all time during construction to coordinate the work with aircraft movements and receive instructions from MASSPORT.

The Contractor is required to purchase, install and maintain the following radios:

The Contractor shall purchase, install, maintain, and remove all radios required for the Contractor's radio escort vehicles. The Contractor shall operate these radios, at his/her expense

The Contractor shall, before the start of construction requiring radio control, test his/her radios with the appropriate agencies to demonstrate their capabilities and to demonstrate the performance of the equipment to their satisfaction. The operators of the radio escort vehicles shall be qualified as approved by the Authority. Radio control will be required when construction equipment or vehicles are crossing an active runway or as hereinbefore specified.

At his/her own expense, the Contractor shall also have radio communication between his/her escort vehicles and either his/her field office or superintendent's vehicle. This shall be the Contractor's own radio frequency. No FAA or Authority frequency shall be used for this purpose.

No separate payment will be made for providing all necessary markings, signs, lights, signals, Flagpeople, traffic control and radios, all of which are considered a subsidiary obligation of the Contractor and shall be included in the contract prices for the various items.

1-8.1 TEMPORARY LIGHTS – Not Applicable

1-9.1 LIGHTED PORTABLE RUNWAY/TAXIWAY CLOSURE MARKERS Not Applicable

1-10.1 CONSTRUCTION SCHEDULE

General. No more than one runway or one taxiway may be closed at any one time except as otherwise noted in the Drawings and Specifications or as agreed to by MASSPORT. When the airport is closed due to inclement weather, no work will be permitted anywhere on the airfield. When construction operations are permitted during the hours of darkness, any engine-driven equipment shall have the exhaust equipped with mufflers suitable for use in residential areas and approved in advance by MASSPORT. The use of backup alarms for all pieces of equipment will also be prohibited during nighttime construction. The Contractor shall provide additional labor to assure that equipment is backed up safely and complies with all OSHA regulations. No separate payment will be made for extra labor required to meet these regulations. Any lights required for nighttime construction shall be properly masked to prevent annoyance to adjacent residential areas. It is not intended that this schedule will cover the details of all the work. The Contractor shall plan work not scheduled herein to correspond with the times the areas are available. When the Authority closes an active operations area at the request of the Contractor to do any project work, the Contractor must be mobilized and ready to proceed to said area with all necessary men and equipment within five (5) minutes of receiving the closure.

1-12.1 FIELD OFFICES Not Applicable

1-14.1 MEASUREMENT AND PAYMENT Not Applicable

-END OF SECTION-

SECTION 01 33 00 - SUBMITTAL PROCEDURES

PART 1 - GENERAL

1.1 GENERAL

A. Samples, certificates, reports, catalog cuts, letters, shop drawings, etc. required under this specification shall be submitted to the CO and/or Project Engineer. All products specified herein to meet certain published specifications shall have clarifications submitted which state compliance with such specifications. The Contractor shall provide a minimum of ten (10) business days for FAA to review the submittals, unless otherwise noted in the specifications. Rejection of submittals shall not be grounds for claims by the Contractor.

1.2 SUBMITTAL PROCEDURE

A. Three (3) complete sets (to include one reproducible) of all shop drawings and/or product data shall be submitted by the Contractor to the CO. Two sets will be marked and returned to the Contractor by the Project Engineer, with the approval status noted.

B. All submittals shall be accompanied by transmittal letters identifying the contents of the submittal. Transmittal letters shall consist of one original and one copy.

C. Work requiring an approved submittal shall not be initiated prior to approval of that submittal.

D. Submittals from subcontractors shall be reviewed and approved by the Contractor and coordinated with any other work involved before they are transmitted for review. Submittals shall be complete and detailed, and assembled in sets. Incomplete or inadequate descriptions will not be approved.

1.3 SUBMITTAL APPROVAL

A. Approved As Submitted - If “Approved As Submitted” is marked by the Project Engineer, each copy of the submittal will be identified as having received such approval by being stamped (or annotated) and dated. After submittals have been approved, no changes or substitutions will be permitted without written approval by the Project Engineer.

B. Approved As Noted - If “Approved As Noted” is marked by the Project Engineer, the submittal is satisfactory contingent upon the Contractor’s acceptance of comments and notations. If accepted, resubmittal is not required.

C. Not Approved - If “Not Approved” is marked by the Project Engineer, the submittal does not meet job requirements and the Contractor must resubmit. If submittal is disapproved, the Contractor shall resubmit the corrected material in the same quantity as specified for the original submittal.

1.4 SUBSTITUTE MATERIAL

The Contractor may submit for approval material other than that specified if it meets the following:

A. Meets or exceeds the specifications as determined by the FAA.

B. Material is available on a timely basis.

C. Substitution of a material shall not obligate the FAA for additional costs which may be associated with furnishing and installing the substitute material. Substitution submissions shall be clearly marked as such and shall meet the requirements of paragraph 2.1, Submittals. The Contractor shall allow ten (10) business days from date of receipt by the Project Engineer for substitute submission approval.

PART 2 - MATERIALS

2.1 SUBMITTALS REQUIRED

Submittals required shall include but not necessarily be limited to the following:

A.	Safety Plan:	Section 01 11 00.
B.	Schedule:	Section 01 11 00.
C.	Progress Schedule:	Section 01 11 00.
D.	Contractor Furnished Materials:	Section 01 11 00.
E.	Permits, Inspection, Licenses, Certificates:	Section 01 11 00.
F.	Material Safety Data Sheets:	Section 01 11 00.
G.	As-Built Drawings:	Section 01 11 00.
H.	Warranties:	Section 01 11 00.
I.	Hazardous Materials:	Section 01 35 43.13.
J.	Common Work Results for HVAC:	Section 23 05 00.
K.	Documentation, Testing, and Training for GFE:	Section 26 00 02
L.	Common Work Results for Electrical Systems:	Section 26 05 00.
M.	Low-Voltage Electrical Power Conductors and Cables:	Section 26 05 19.
N.	Grounding and Bonding for Electrical Systems:	Section 26 05 26
O.	Hangers and Supports for Electrical Systems:	Section 26 05 29
P.	Raceways and Boxes for Electrical Systems:	Section 26 05 33.
Q.	Identification For Electrical Systems	Section 26 05 53.
R.	Enclosed Switches and Circuit Breakers:	Section 26 28 16.

PART 3 - EXECUTION

Not Applicable

Construction Project Submittal Log

Work Release No.:			Construction Subcontractor:				
Project Name: BOS ASR-9 UPS Replacement			Purchase Order No.:				
Location: Boston, MA			Anticipated Completion Date:				
Facility: ASR-9			Specification No.:				
* * * Submittals Due Prior to Notice-to-Proceed for On-Site Construction * * *							
Item No.	Specifications Paragraph	Description	Date Due	Date Received	Date Approved	Date Returned	Action/Remarks
1	00 73 19 Para. 1.5.E	Contractor Safety Plan					
2	01 11 00 Para. 1.5.L	Schedule					
3	01 11 00 Para. 2.2	Contractor Furnished Material					
4	01 11 00 Para. 1.5.G	Permits, Inspection, Licenses, Certificates					
5	01 11 00 Para 1.7 A	Safety Plan					
6	01 11 00 Para. 1.7.D	Material Safety Data Sheets (MSDS)					
* * * Submittals Due Prior to Completion of the Contract * * *							
Item No.	Spec Paragraph	Description	Date Due	Date Received	Date Approved	Date Returned	Action/Remarks
1	01 11 00 Para. 1.5.L 2	Progress Schedule					
2	01 11 00 Para. 1.5.O	Hazardous Waste Disposal Receipts					
3	01 11 00 Para. 1.5.R	As-Built Markups					
4	01 11 00 Para. 1.5.S	Warranties					
9	Division 23 05 00	Air Handling Units					
10	Division 26 00 02	Documentation, Testing, Training					
11	Division 26 05 19	Power Conductors and Cables					
12	Division 26 05 26	Grounding and Bonding					
13	Division 26 05 48	Seismic Controls					
14	Division 26 05 53	Electrical Identification					
15	Division 26 28 26	Switches and Circuit Breakers					

END OF SECTION 01 33 00

SECTION 01 35 43.13 - ENVIRONMENTAL PROCEDURES FOR HAZARDOUS MATERIALS

PART 1 - GENERAL

1.1 DESCRIPTION OF WORK

A. General: This section details what is known about specific hazardous materials that might be affected by the work as described in the attached plans and drawings. It includes warnings to the General Contractor and his subcontractors, and general rules on how to perform the work and protect workers and the environment.

B. This section covers work with vinyl asbestos floor tile (VAT) and other asbestos-containing materials (ACM), and lead-acid storage batteries. Any other hazardous material suspected of being present at the site should be brought to the attention of the COTR.

C. It is the responsibility of the Contractor to perform the following: personal monitoring for airborne asbestos fibers, lead dust and other airborne contaminants in compliance with applicable OSHA regulations, all work in a safe and legal manner, and in compliance with all applicable Federal, State, and local regulations, and FAA guidelines. The Contractor shall be responsible for securing and paying for:
   1. Provide independent company to perform air monitoring;
   2. Labor, materials and equipment;
   3. Other facilities and services necessary for proper execution and completion of the work;
   4. All permits, government fees and/or notifications, as required by Federal, State, and local regulations.
   5. Any required employee training (e.g. - supervisor and worker, asbestos awareness, lead awareness, respiratory protection program, etc.) and/or monitoring (e.g. - medical, employee exposure, etc.);
   6. Clearance testing/air monitoring;
   7. Waste disposal permits and testing, and associated disposal costs; and
   8. Providing submittals to the COTR prior to the commencement of work.

1.2 DEFINITIONS

A. Abatement: Procedures to control fiber or dust release from asbestos or lead-containing materials, or other hazardous materials. Includes removal, encapsulation, enclosure, repair, demolition, disposal and renovation activities.

B. Clearance Air Monitoring: The processes of measuring the concentrations of airborne contaminants to determine if an abated area is sufficiently clean to allow reoccupancy.

C. Competent Person: A person who is capable of identifying existing ACM or LBP hazards in the workplace. The duties of the Competent Person include the performance or supervision of the following: establishing the negative-pressure enclosure, ensuring its integrity, and controlling entry and exit from the enclosures; supervising any employee exposure monitoring required by the OSHA standards; ensuring that all employees in the work area wear the appropriate personal protective equipment and are trained in the use of appropriate methods of exposure control and the use the hygiene facilities. The Competent Person shall also be trained in the contents of OSHA regulations 29 CFR 1926.1101 and 29 CFR 1926.62; and other practices for reducing the hazards.

D. Eight-Hour Time Weighted Average (TWA): Airborne concentration of a contaminant averaged over an 8-hour workday to which an employee is exposed.

E. Hazardous Materials Abatement Subcontractor: The individual and/or business performing the Hazardous Materials Abatement. The Subcontractor is responsible for the proper completion of project activities in accordance with all Federal, State and local regulations, and FAA guidelines.

F. Permissible Exposure Limit (PEL): An airborne concentration of asbestos fibers (longer than 5 micrometers) of 0.1 fibers per cubic centimeter (f/cc) calculated as an eight (8) hour time-weighted average (TWA). For lead, the PEL is 50 micrograms per cubic meter (µg/m3).

G. TSDF: An EPA and/or State approved Treatment, Storage, and Disposal Facility for hazardous materials.

H. Visible Debris: Any particulate material or residue that is visually detectable on a surface without the aid of instruments.

I. Asbestos: The minerals amosite, chrysolite, crocidolite, actinolite, anthophyllite and tremolite.

J. Asbestos-Containing Material (ACM): Material composed of asbestos of any type in an amount greater than 1 percent by weight.

K. Friable Asbestos: ACM that, when dry, may be easily crumbled, pulverized, or reduced to powder by hand pressure; includes previously non-friable material after it has become damaged to the extent that when dry, it may be crumbled, pulverized, or reduced to powder by hand pressure.

1.3 APPLICABLE PUBLICATIONS

A. The publications listed below form a part of this specification to the extent referenced. The publications are referred to in the text by basic designation only.
   1. CODE OF FEDERAL REGULATIONS (CFR):
      a. OSHA General Industry Safety and Health Standards (29 CFR 1910), and OSHA 1910.120, Hazardous Waste Operations
      b. OSHA Construction Industry Standards (29 CFR 1926), including but not limited to, the following:
         (1) CFR 1926.62: Lead
         (2) CFR 1926.1101: Asbestos
         (3) OSHA: Flooring Industry Settlement Agreement (asbestos, 6/15/95)
         (4) OSHA: Roofing Industry Settlement Agreement (asbestos, 3/15/95)
      c. National Emission Standards for Hazardous Air Pollutants (40 CFR, Part 61)
      d. EPA Resource Conservation and Recovery Act (40 CFR Parts 260 through 271)
      e. Department of Transportation (DOT) 49 CFR Part 173 and Part 178
      f. Environmental Protection Agency (EPA) Final Rule (40 CFR Part 761.40-180; Marking, disposal, spill cleanup, and records and monitoring requirements for PCBs
      g. EPA Resource Conservation and Recovery Act (40 CFR, Part 266, Subpart G, Standards for Materials Being Recycled/Reused, and Standards for Lead-Acid Batteries Being Reclaimed) Also refer to EPA 40 CFR 273, Standards for Universal Waste Management.
   2. FEDERAL STANDARD
      a. 313: Material Safety Data Sheets, Preparation and Submission

1.4 RELATED DOCUMENTS

A. Drawings and general provisions of the Contract, including General and Supplementary Conditions and Division 1 Specification Sections apply to this Section.

1.5 SUBMITTALS

A. General: Submittals shall be in conformance with Section 01 33 00. Submit the following:
   1. Product data and MSDS where applicable, for the following:
      a. Materials to be used for LBP abatement, including LBP removal chemicals, encapsulants, washing solutions, neutralizers, etc.
      b. Materials to be used for asbestos abatement, including polyethylene sheeting, HEPA vacuums and exhaust, personal protective equipment, surfactants, encapsulants, spray adhesives, etc.
      c. Materials to be used for lead-acid battery removal, transportation, and re-cycling, including personal protective equipment and emergency equipment to be on hand in case of spillage or contamination of workers.
   2. Transportation and disposal facilities to be used for hazardous materials.
   3. Permits and Notifications: When hazardous materials are disposed, the Contractor shall submit copies of permits and manifests from applicable Federal, State, and local authorities, and necessary certificates to document that the material(s) has (have) been disposed of as per regulations and Contract Specifications.
   4. Plan of Action: A detailed site-specific plan of action for handling hazardous materials including, but not limited to, asbestos and lead-acid storage batteries must be submitted. The hazardous materials plan of action shall contain the following:
      a. Identification of possible hazards, problems, and proposed control mechanisms.
      b. Description of how applicable safety and health regulations and standards are to be met.
      c. Protection of public or others not related to the operation.
      d. List of names of employees to be used for the work, including specialized training, licenses and experience.
      e. Type of protective equipment and work procedures to be used.
      f. Material Safety Data Sheets (MSDS) for and procedures for using, disposing of, or storing toxic/hazardous materials (See also 29 CFR 1910.1200 and 1926.59).
      g. Emergency procedures for accidental spills or exposures.
      h. Interfacing and control of subcontractors, if applicable.
      i. Identifications of any required analyses, test demonstrations, and validation requirements.
      j. Methods of certification for compliance.
   5. Results of monitoring, clearance tests, and laboratory tests.

PART 2 - PRODUCTS

2.1 MATERIALS AND EQUIPMENT

A. Special facilities, devices, equipment, clothing, and similar items used by the Contractor in the execution of the work shall comply with all applicable Federal, State, and local regulations.

2.2 MATERIAL SAFETY DATA SHEETS (MSDS)

A. MSDS shall be available for all products used under this contract. The Contractor shall be responsible for meeting the hazard communication requirements, in accordance with 29 CFR 1910.1200 and 29 CFR 1926.59.

PART 3 - EXECUTION

3.1 LEAD-ACID STORAGE BATTERIES

A. As indicated on the drawings and in the specification, the existing lead-acid storage batteries are to be removed. The lead-acid batteries shall be removed, and then re-cycled by an approved battery re-cycling facility. However, the FAA may wish to re-use and/or relocate the existing lead-acid storage batteries, and the Contractor shall be informed of such action, unless already so indicated in the drawings or specifications, by the COTR, after decision by the FAA Sector Site Coordinator.

B. The work shall conform to all Federal EPA, OSHA, DOT, State, and local regulations.

C. Workers assigned to move, relocate, transport and re-cycle the lead-acid storage batteries shall be trained in working with Hazardous Materials per 29 CFR 1910.120, and properly protected with personal protective equipment including, but not limited to, head and face protection, acid-resistant gloves, and acid-resistant body protection.

D. The lead-acid storage batteries shall be carefully moved, packaged, labeled, and transported to an approved lead-acid storage battery re-cycling facility or a TSDF facility that has contracted to forward the batteries to an approved re-cycling facility. All handling, packaging, labeling, and transporting of the lead-acid storage batteries shall be in conformance with all applicable Federal, State and local regulations.

E. The Contractor shall submit a manifest attesting to the delivery of the lead-acid storage batteries to an approved TSDF or battery re-cycling facility within 14 days after battery removal. The manifest (or equivalent acceptable to the COTR shall be provided to the COTR and CO.

3.2 OTHER ASBESTOS-CONTAINING AND HAZARDOUS MATERIALS

A. If any other suspected ACM or hazardous material is encountered during the work, the information shall be immediately transmitted to the COTR. The work in the impacted area shall be stopped and contained immediately pending appropriate consultation with the Owner. After consultation with the Owner, the CO will direct the Contractor through the COTR as to what further actions are to be taken.

END OF SECTION 01 35 43.13

SECTION 02 41 00 - DEMOLITION

PART 1 - GENERAL

1.1 SUMMARY: This section specifies removal, disposal, storage and salvage of existing materials, equipment and fixtures.

1.2 APPLICABLE DOCUMENTS: N/A

1.3 CONSTRUCTION CONDITIONS: The ASR-9 and associated equipment are operational facilities. Unscheduled loss of power is unacceptable. Contractor must coordinate all efforts and submit cutover plans to the COTR for approval. The disruption of power shall only be allowed as a scheduled shutdown with an approved cutover plan. Midnight work will be required for all shutdowns.

1.4 SUBMITTIALS: Shall conform to division 01 33 00 - Submittal Procedures.

PART 2 - MATERIALS AND EQUIPMENT

2.1 MATERIALS

A. Removal of any government property from the ASR-9 site shall be at the expressed direction of the FAA
B. Title to removed property: Materials and equipment to be removed and salvaged shall remain the property of the FAA. Materials and equipment to be removed and disposed of shall become the property of the contractor.
C. Contractor shall relocate/dispose of equipment from the ASR-9 site per governing regulations.

2.2 EQUIPMENT TO BE REMOVED

A. The following list of existing equipment shall be removed. Equipment includes, but is not limited to:
    1. 80kVA UPS, battery rack, batteries, and battery monitor
    2. ASCO bypass switch
    3. UPS Output fused disconnect
    4. All conduits, and conductors as shown on construction drawings
    5. Load bank non-fused disconnect switch
    6. Monitoring and control equipment associated with the UPS
    7. Fuses as noted in the drawings

B. The following list of existing equipment shall be removed according to bid alternate #1. Equipment includes, but is not limited to:
    1. ACU-1 and ACU-2 and associated controls
    2. Contractor is responsible for recovering and properly disposing all refrigerant from ACU-1 and ACU-2 according to EPA regulations.
    3. Fused disconnects (2)
    4. Intake, exhaust, and economizer hoods for ACU-1 and ACU-2
    5. All associated duct work and materials as shown on construction drawings
    6. All conduits, and conductors associated with ACU-1 and ACU-2.
    7. Existing UPS shelter HVAC Units shall remain.

2.3 TEMPORARY POWER

A. During construction a temporary 80kVA uninterruptible power system shall be GFE. UPS system may be stationary or trailer mounted. Equipment and location shall be approved by the COTR.
B. UPS shall meet all FAA and national code standards.
C. Provide temporary power conductors, as required in the construction drawings.
D. UPS shall be tested to meet FAA Order 6980.29
E. Submit a schedule for each cutover required for temporary and new equipment installation. Shutdown work at the ASR-9 facility shall be between midnight and 5am.
F. See drawings for additional cutover requirements.

2.4 TEMPORARY HVAC

A. Provide temporary HVAC as required. Units shall be of the same size as existing units. Contractor shall be responsible for installation of temporary equipment.
B. Provide temporary power. Coordinate source and connection of temporary power with COTR.
C. Provide submittals for temporary HVAC units to be approved by COTR.
D. HVAC cutovers shall be scheduled and approved by COTR.

PART 3 - EXECUTION

3.1 PERSONNEL PROTECTION: Erect and maintain, as required by conditions and progress of the work, all necessary safeguards for safety and protection of employees, and FAA personnel working within the facility. Safeguards shall include railings, partitions, polyethylene dust enclosures, lighting, posting of danger signs and other warnings against hazards. Take such steps as necessary to minimize dust pollution during the demolition operations. Critical equipment is located in the working vicinity; polyethylene dust enclosures must be established before and during the working period.

3.2 GENERAL

A. All materials, equipment and fixtures to be removed and salvaged shall be removed with care, stored and protected.

B. Each item of equipment indicated to be removed and salvaged shall be removed as a unit; listed, indexed, and tagged for storage.

C. Each unit shall be removed with the auxiliary equipment required for normal operation of the unit, except when multiple units have common auxiliary equipment that is required for continuous operation of the units left in place.

D. Do not commence demolition until all furniture/stored material is removed from the work area by others.

E. The sequence of area demolitions shall be scheduled, with respect to performance of new finishing. Schedule the demolition work in such a way as to ensure against disruption of systems and services essential to the operation of the facility, prolonged inconvenience to

personnel, and in relation to preceding and succeeding construction activities. Follow the sequence of work in specification 01 11 00 0 Summary of Work.

F. Construction materials i.e. conduit, conductors, wall board, and studding shall be removed, where indicated or required to facilitate the new work, and legally disposed of in a timely manner.

3.3 CLEANUP: Provide a clean and orderly site at all times. Particular attention shall be given to the elimination of combustible rubbish or debris in the areas and none shall be left exposed overnight or at other periods of time the work is shutdown.

END OF SECTION 02 41 00

SECTION 03 11 00 - CONCRETE FORMING

PART 1 - GENERAL

1.1 APPLICABLE PUBLICATIONS:

The publications listed below form a part of this specification to the extent referenced. The publications are referred to in the text by the basic designation only. The latest issue of the publication shall be used.

A. American Concrete Institute (ACI) Publications:
   1. 301 Structural Concrete for Buildings
   2. 318 Building Code Requirements
   3. 347 Recommended Practice for Concrete Formwork

1.2 SUBMITTALS:

Provide submittals in accordance with Division One requirements.

1.3 Products installed but not furnished under this section

A. Section 03 30 00 - "Cast-In-Place Concrete": Supply of concrete accessories for placement by this section.

1.4 DESIGN REQUIREMENTS:

A. Design, engineer and construct formwork, shoring and bracing to conform to design and code requirements; and such that the resultant concrete conforms to required shape, line, and dimensions.

1.5 QUALITY ASSURANCE

A. Perform work in accordance with ACI 301, ACI 318 and ACI 347.

PART 2 - PRODUCTS

2.1 Form Materials:

A. Forms shall be of wood, plywood, reinforced plastic or metal. Plywood, other than for lining, shall be concrete-form plywood not less than 5/8 inch thick conforming with Department of Commerce product standard PS-1 free of raised grain, torn surfaces, worn edges, patches, or other surface defects which would impair the texture of the concrete surface. Surfaces of steel forms shall be free from irregularities, dents and sags.

2.2 FORMWORK ACCESSORIES

A. Form accessories to be partially or wholly embedded in the concrete, such as ties and hangers, shall be of a commercially manufactured type. Nonfabricated wire shall not be used.

B. Form ties shall be constructed so that the ends of end fasteners can be removed without causing appreciable spalling at the surface of the concrete. After the ends or end fasteners of form ties have been removed, the embedded portion of the ties shall terminate not less than 3/4 inch from the formed surface of concrete to be permanently exposed to view.

PART 3 - EXECUTION

3.1 EXAMINATION

A. Verify lines, levels and centers before proceeding with formwork. Ensure that dimensions agree with drawings.

3.2 ERECTION - FORMWORK

A. Erect formwork, shoring and bracing to achieve design requirements, in accordance with requirements of ACI 301, ACI 318 and ACI 347.

B. Provide bracing to ensure stability of formwork. Shore or strengthen formwork subject to over stressing by construction loads.

C. Arrange and assemble formwork to permit dismantling and stripping. Do not damage concrete during stripping.

D. Align joints and make watertight. Keep form joints to a minimum.

3.3 APPLICATION - FORM RELEASE AGENT

A. Apply form release agent on formwork in accordance with manufacturer's recommendations.

B. Apply prior to placement of reinforcing steel, anchoring devices, and embedded items.

C. Do not let excess form coating material stand in puddles in the forms nor shall such coating come in contact with hardened concrete against which fresh concrete is to be placed.

D. Do not apply form release agent where concrete surfaces will receive special finishes or applied coverings which are effected by agent. Soak inside surfaces of untreated forms with clean water prior to placement of concrete.

3.4 INSERTS, EMBEDDED PARTS, AND OPENINGS

A. Provide formed openings where required for items passing through concrete work.

B. Locate and set in place items which will be cast directly into concrete.

C. Coordinate with work of other sections in forming and placing openings, slots, recesses, sleeves, bolts, anchors, other inserts, and components of other Work.

D. Install accessories in accordance with manufacturer's instructions, straight, level, and plumb. Ensure items are not disturbed during concrete placement.

3.5 FORM CLEANING

A. Clean forms as erection proceeds, to remove foreign matter within forms.

B. Clean formed cavities of debris prior to placing concrete.

C. Flush with water or use compressed air to remove remaining foreign matter. Ensure that water and debris drain to exterior through clean-out ports.

D. During cold weather, remove ice and snow from within forms. Do not use de-icing salts. Do not use water to clean out forms, unless formwork and concrete construction proceed within heated enclosure. Use compressed air or other means to remove foreign matter.

3.6 FORMWORK TOLERANCES

A. Construct formwork to maintain tolerances required by ACI 301.

3.7 FIELD QUALITY CONTROL

A. Inspect erected formwork, shoring, and bracing to ensure that work is in accordance with formwork design, and that supports, fastenings, wedges, ties, and items are secure.

3.8 FORM REMOVAL

A. Do not remove forms or bracing until concrete has gained sufficient strength to carry its own weight and imposed loads.

B. Loosen forms carefully. Do not wedge pry bars, hammers, or tools against finish concrete surfaces scheduled for exposure to view.

C. Store removed forms in manner that surfaces to be in contact with fresh concrete will not be damaged. Discard damaged forms.

END OF SECTION 03 11 00

SECTION 03 20 00 CONCRETE REINFORCING

PART 1 - GENERAL

1.1 SUMMARY: Fabricate and install reinforcing and the related accessories required for cast-in-place concrete work not specified elsewhere including the following work: Structural Concrete

1.2 APPLICABLE PUBLICATIONS - The following specifications and standards of the issues currently in force form a part of this section and are applicable as specified herein.

A. American Society for Testing and Materials (ASTM) Publications:
1. A 615 Deformed and Plain Billet-Steel Bars for Concrete Reinforcement
2. A 853 Wire, Steel, Carbon for General Use.

PART 2 - PRODUCTS

2.1 MATERIALS

A. Bars - Carrying rolled-on identifying marks to denote the mill location, bar size and type of steel. Grade 60 and higher shall also be marked to indicate minimum yield.

B. Tie wire - ASTM A 853, 16 gage minimum annealed black steel.

C. Material - Use deformed bars unless otherwise specified or shown.

PART 3 - EXECUTION

3.1 Forming - Unless noted otherwise, bend bars cold. Do not straighten or rebend without specific approval from the COTR.

3.2 Preparation - Remove from reinforcing scale, heavy rust, and any coating, which would reduce bond. Any rebar that comes in contact with form releasing agent shall be replaced.

3.3 Accessories - Provide spacers, chairs, wire ties, etc., necessary to properly assemble, space and support the reinforcing prior to concrete placement. Accessories shall be sized to provide required concrete coverage. Position and support bolts, anchors, and other cast-in place items with appropriate accessories.

3.4 Storage - Store reinforcing so that it is not less than 6 inches above ground.

END OF SECTION 03 20 00

SECTION 03 30 00 CAST-IN-PLACE CONCRETE

PART 1 - GENERAL

1.1 APPLICABLE PUBLICATIONS: The publications listed below form a part of this specification to the extent referenced. The publications are referred to in the text by the basic designation only. The latest issue of the publication shall be used.

A. American Concrete Institute (ACI) Publications:
ACI Manual Guide for Making a Condition Survey of Concrete in Service, ACI Manual of Concrete Practice, Part l
211.1 Selecting Proportions for Normal, Heavy Weight and Mass Concrete
214 Recommended Practice for Evaluation of Compression Test Results of Concrete
301 Structural Concrete for Buildings
306R Cold Weather Concreting
318 Building Code Requirements for Reinforced Concrete

B. American Society for Testing and Materials (ASTM) Publications:
C 29 Unit Weight and Voids in Aggregate
C 31 Making and Curing Concrete Test Specimens in the Field
C 33 Concrete Aggregates
C 39 Compressive Strength of Cylindrical Concrete Specimens
C 87 Effect of Organic Impurities in Fine Aggregate on Strength of Mortar
C 88 Soundness of Aggregates By Use of Sodium Sulfate or Magnesium Sulfate
C 94 Ready-Mixed Concrete
C 125 Concrete and Concrete Aggregates; Definition of Terms Relating
C 127 Specific Gravity and Absorption of Coarse Aggregate
C 128 Specific Gravity and Absorption of Fine Aggregate
C 136 Sieve Analysis of Fine and Coarse Aggregates.
C 138 Unit Weight, Yield, and Air Content (Gravimetric) of Concrete
C 143 Slump of Portland Cement Concrete
C 150 Portland Cement
C 156 Water Retention by Concrete Curing Materials
C 157 Length Change of Hardened Cement Mortar and Concrete
C 171 Sheet Materials for Curing Concrete
C 172 Sampling Freshly Mixed Concrete
C 173 Air Content of Freshly Mixed Concrete by the Volumetric Method
C 192 Making and Curing Concrete Test Specimens in the Laboratory
C 227 Test Method for Potential Alkali Reactivity of Cement-Aggregate Combinations
C 231 Air Content of Freshly Mixed Concrete by the Pressure Method
C 233 Test for Air-Entraining Admixtures for Concrete
C 260 Air-Entraining Admixtures for Concrete
C 309 Liquid Membrane-Forming Compounds for Curing Concrete
C 418 Abrasion Resistance of Concrete by Sandblasting
C 494 Chemical Admixtures for Concrete
C 496 Splitting Tensile Strength of Cylindrical Concrete Specimens
C 595 Blended Hydraulic Cements
C 618 Fly Ash and Raw or Calcined Natural Pozzolan for Use as a Mineral Admixture in Portland Cement Concrete
C 666 Resistance of Concrete to Rapid Freezing and Thawing

C 881 Specification for Epoxy-Resin Base Bonding System for Concrete
C 979 Standards for Pigments for Integrally Colored Concrete
C 1107 Packaged Dry, Hydraulic-Cement Grout (Non-Shrink)
D 75 Sampling Aggregates
D 412 Test Method for Distillation of Cut-Back Asphaltic (Bituminous) Products
D 1752 Preformed Sponge Rubber and Cork Expansion Joint Fillers for Concrete Paving and Structural Construction
D 2l03 Polyethylene Film and Sheeting
D 2240 Test Method for Rubber Property - Durometer Hardness
D 2419 Test Method for Sand Equivalent Value of Soils and Fine Aggregate

1.2 SUBMITTALS: Provide submittals in accordance with Division One requirements.

A. Contractor-Furnished Mix Design: Submit a concrete mix design for each class of concrete included in the work that contain the information required in ACI 301, Proportioning allowing time for a meeting with the Contractor, ready-mix supplier, admixture manufacturer, testing laboratory, and the COTR to evaluate the mixes' ability to perform in the various placements of this project.

1. Mix Certification: Before concrete is placed at the job site, each concrete mix design shall be reviewed and certified by a commercial, independent engineering testing laboratory that has been submitted and approved per Division One. The mix design shall be based on aggregate data (gradation and specific gravity determined by a laboratory within the past 6 months) and the specified requirements. The laboratory's certification shall include but not be limited to the following:

a. Confirmation of aggregate test data based on available test results determined within the past six months and the date tests were made
b. Evaluation of Mix Designs. Check calculations and report cement factor, concrete plant standard deviation used in the design of the mix, water-cement ratio by weight, percentage ratio of fine aggregate to total aggregate by weight, weight in pounds of saturated surface-dry aggregates (fine and coarse) per sack of cement, volume of admixtures, and yield for one cubic yard of concrete.
c. Statement of recommended approval or disapproval of mix designs.

B. Materials Certificates: Submit material certificates signed by the manufacturer and Contractor, certifying that each material item complies with, or exceeds, the specified requirements for the following materials:

a. Aggregates
b. Admixtures
c. Waterstops
d. Materials for Curing Concrete
e. Joint Sealing Materials
f. Expansion Joint Filler
g. Coloring Admixture

C. Certified Laboratory Test Reports: Submit certified materials laboratory test reports in lieu of any material certificates not submitted. Perform tests per the referenced publications.

D. Product Warranty: The material manufacturer's standard warranty shall not contain any disclaimer limiting their responsibility. The manufacturer shall be willing to participate with the Contractor in replacing or repairing any area found to be defective due to faulty materials as determined by accepted test methods.

E. Ready-Mix Concrete Plant: Submit name and location of the proposed commercial ready mix concrete plant.

1.3 DELIVERY AND STORAGE:

A. Cement: Store cement immediately upon receipt. Store cement in bags on pallets in a suitable weatherproof structure which shall be as air-tight as practicable and with the pallets elevated above the floor a distance sufficient to prevent the absorption of moisture. Stack the bags close together to reduce circulation of air but not against outside walls. The manner of storage shall permit easy access for inspection and identification of each shipment. Transfer bulk cement to elevated airtight and weatherproof bins. At the time of use all cement shall be free-flowing, and free of lumps. Cement that has been in storage longer than 6 months shall be tested by standard mortar tests to determine its suitability for use and such cement shall not be used without approval of the COTR. Show the date of receipt of each shipment of bag cement.

B. Aggregates: Store aggregates on areas covered with tightly laid wood planks, sheet metal, or other hard and clean surface, and in a manner that will preclude the inclusion of foreign material. Store aggregates of different sizes in separate piles. Build stock piles of coarse aggregate in horizontal layers not exceeding 4 feet in depth to minimize segregation. Remix the coarse aggregate to conform to the grading requirements should it become segregated. Frozen or partially frozen aggregates shall not be used.

C. Admixtures: Store admixtures in a manner that will not damage the containers. An air-entraining admixture which has been in storage for longer than 6 months or which has been subjected to freezing shall not be used until retest proves it to be satisfactory. Show the production date of the admixture on each container.

1.4 CONCRETE:

A. Contractor-Furnished Mix Design: ACI 318 and ACI 301. Concrete shall be homogeneous, readily placeable and uniformly workable, proportioned to conform to ACI 211.1. Mix proportions for all concrete unless otherwise specified shall be selected preferably on the basis of field experience, but in the case where sufficient or suitable strength test data is not available concrete shall be proportioned on the basis of laboratory trial mix design.

1. Field Experience Mix Design: Field experience using test results with the materials to be employed may be the basis of mix proportioning provided that not less than 30 consecutive satisfactory compressive strength tests on concrete using the proposed materials with a similar mix are available. A compressive strength test is defined as the average 28-day compressive strength of two companion cylinders made conforming to ASTM C 172 and ASTM C 31 and tested conforming to ASTM C 39. The standard deviation of such tests shall be computed as a basis for design of the mix. The design average strength shall exceed the specified strength in accordance with the following formula.

a. When standard deviation is less than 500 psi, Design Average Strength =

Specified Minimum Strength + (1.343 x Standard Deviation).

b. When standard deviation is greater than 500 psi, Design Average Strength = Specified Minimum Strength + (2.326 x Standard Deviation) - 500 psi.

c. Submit previous test data, calculated standard deviation, and the proposed mix proportions to the COTR prior to placing concrete.

B. Normal Weight Concrete: Provide normal weight concrete conforming to the following:

Location	28 Day Compressive Strength (psi)	Nominal Maximum Size of Coarse Aggregate (Inches)	Slump with Admixtures (Inches)	Maximum Water/Cement Ratio by Weight (Inches)
All Concrete Unless Noted Otherwise	3000	3/4	4 to 8	0.44

1. Pozzolan Content: Pozzolan content shall not exceed 30 percent by weight of the total cementitious material (Cement plus pozzolan). Use of pozzolan is at the Contractor's option.

C. Air-Entrained Concrete: Provide air-entrained concrete for retaining walls, walks, curbs, and all concrete exposed to the weather, conforming to the following:

Nominal Maximum Size of Coarse Aggregate (Inches)	Air Content (percent)
3/8	7-1/2
½	7
¾	6
1	6
1-1/2	5-1/2

Tolerance on air content as delivered shall be ±1.5 percent.

1. Air-Entrainment: Entrain air by using an air-entraining admixture. Add air-entraining admixtures into the mixing water by means of a mechanical dispenser in a manner that will ensure uniform distribution of the agent throughout the batch. Except as specified otherwise, the air content of freshly mixed air-entrained concrete shall be as specified in ACI 318. Determine the percentage of air by ASTM C 231 on samples of concrete during placing of the concrete in the forms.

D. Water-Reducing Admixture or High Range Water-Reducing Admixture: Use water-reducing admixture or high range water-reducing admixture as required for placement and workability in strict compliance with manufacturer's written directions.

E. Concrete Made With High-Early-Strength Portland Cement: Use concrete made with high-early-strength portland cement only when authorized specifically by the COTR. The requirements for proportioning and mixing shall be as specified herein for normal and air-entrained portland cement concrete, except that the 7-day compressive strengths shall be the

same as the estimated 28-day compressive strengths for portland-cement concrete specified. In lieu of the 7-day and 28-day strength tests specified hereinafter, tests will be made at 3 and 7 days.

F. Field Reference Manual: The Contractor shall keep a copy of the latest edition of the Field Reference Manual, ACI SP15, in the field office.

PART 2 - PRODUCTS

2.1 MATERIALS:

A. Cement: Type I or Type II conforming to ASTM C 150. All cement for exposed concrete surfaces shall be of the same type from the same manufacturing plant.

B. Water: Water for mixing and curing shall be fresh, clean and potable.

C. Aggregates: Aggregates shall be free from any substance which may be deleteriously reactive with the alkalies in the cement in an amount sufficient to cause excessive expansion of the concrete. Acceptability of the aggregate shall be based upon satisfactory evidence furnished by the Contractor to the COTR for approval that the aggregate is free from such materials. Such evidence shall include service records of concrete of comparable properties sunder similar conditions of exposure in accordance with ACI Manual, Part I, or certified records of test by submitted and approved by Division 1 testing laboratory. Tests shall conform to the method of test for Potential Alkali Reactivity of Cement-Aggregate Combinations (mortar-bar method) in accordance with ASTM C 227. Test aggregate from newly-developed quarries for potential alkali reactivity in accordance with ASTM C 227. Wash aggregates before use. Gradation of the fine and coarse aggregates shall be as specified herein.

1. Fine Aggregates: ASTM C 33. When using fine aggregates from different sources of supply, do not mix, store in the same stockpile or use alternately in the same structure. The fineness modulus of fine aggregate for corresponding coarse aggregate maximum sizes shall be from 2.40 to 2.90.

2. Coarse Aggregates: ASTM C 33. Combine separate sizes of coarse aggregates with other sizes in proportions by weight to produce an aggregate meeting the grading specified as follows:

Nominal Maximum Size of Coarse Aggregate (Inches)	ASTM C 33 Size Number
3/8	8
½	7
¾	67
1	57
1-1/2	467

3. Satisfactory service record of concrete made from aggregate from the same source. "Satisfactory Service Record" is defined in various industry publications such as issued by the American Concrete Institute, Guide for Making a Condition Survey of Concrete in Service, ACI Manual, Part l.

D. Admixtures: Where not shown or specified, the contractor shall notify in writing to the COTR which admixtures are to be used. When more than one admixture is used in a mix, furnish satisfactory evidence to the COTR that the admixtures to be used are compatible in combination with the cement and aggregates to be used and will be suitable at the job temperatures.

1. Air-Entraining Admixtures: ASTM C 260. Use air entraining admixtures in concrete exposed to freezing or thawing.
2. Water-Reducing Admixtures: Type A, D, F, and G conforming to ASTM C 494. Use water-reducing admixtures at the Contractor's option.
3. Pozzolans: Type F conforming to ASTM C 618, except that the loss of ignition shall not exceed 1 percent.
4. Coloring Admixture: ASTM C 979, synthetic mineral –oxide pigments or colored water-reducing admixtures, free of carbon black; color stable, nonfading, and resistant to lime and other alkalis. Color to be as selected by Owner from manufacturer's full range (excluding cobalt blue, white titanium dioxide, and chromium oxides).

E. Water stops:

1. Elastomer Waterstops: CE CRD-C572.

2. Hydrophilic Strip Waterstops: Minimum tensile strength shall equal 300 PSI per ASTM D412. Minimum ultimate elongation shall equal 600 percent per ASTM D412. Hardness shall equal 55 ± 5 shore A per ASTM D2240. Minimum expansion ratio shall equal 3 to 1.

F. Materials for Curing Concrete

1. Waterproof Paper: ASTM C 171, regular color.
2. Polyethylene Sheeting: ASTM C 171, white opaque color.
3. Polyethylene-Coated Burlap: ASTM C 171.
4. Liquid Membrane-Forming Compound: Liquid type membrane-forming compound for curing concrete complying with ASTM C309, Type I, Class A. Moisture loss shall not be more than 0.055 gr./sq. fm. when applied at 200 sq. ft./gal. in a single coat.

G. Joint Fillers: ASTM D 1752.

H. Moisture Barriers:

1. Vapor Barrier: Polyethylene vapor barrier conforming to ASTM D 2103, Type 13331 with a nominal thickness of 10 mils to be used under ground slabs.
2. Sand: Clean sand with a sand equivalent greater than 30 per ASTM D2419.
3. Liquid Applied Urethane Rubber Waterproofing membrane: Refer to Section 07160 "Bituminous Damproofing."

I. Epoxy Adhesive Bonding Agent: ASTM C 881, two component material suitable for use on dry or damp surfaces. Provide material "Type", "Grade", and "Class" to suit project requirements.

PART 3 - EXECUTION

3.1 PROPORTIONING, MEASUREMENT AND MIXING:

A. Proportioning of Materials: Accomplish production of concrete per ACI 301, Chapter 7, and as follows. Accomplish proportioning of materials by weighing, except as otherwise provided herein. In urgent situations, volumetric proportioning may be used temporarily, if permitted by the COTR who will stipulate the length of the period during which volumetric proportioning may be used. Furnish the necessary equipment and establish accurate procedures for determining the quantities of free moisture in the aggregates, the true volume of the fine aggregate if volumetric proportioning is used, and the air content of the freshly mixed concrete if air-entrained concrete is used. Allowable tolerances for measuring cement and water shall be 1 percent; for aggregates 2 percent; and for admixtures 3 percent. No water shall be added to concrete at the site.

1. Weight Measurement: Cement in standard packages (bags) need not be weighed, but weigh bulk cement or fractional packages on a scale separate from that used for weighing the other material. When fly ash or other pozzolan are used in the mix design, they may be weighed cumulatively with the cement.

2. Volumetric Measurement: Transpose the weight proportions into equivalent volumetric proportions by weighing representative samples of the aggregates in the condition in which they will be measured and in accordance with ASTM C 29. For fine aggregate, make allowance for the bulking effect from contained moisture. Also, make suitable allowances for variations in the moisture condition of the aggregates.

B. Ready-Mixed Concrete: Equipment for ready-mixed concrete shall conform to ASTM C 94 as modified herein. Ready-mixed concrete is defined in this specification as concrete produced regularly by a commercial establishment and delivered to the purchaser in the plastic state. Ready-mixed concrete may be used provided that (a) the plant has sufficient capacity and transportation equipment to deliver the concrete at the rate desired and (b) the plant meets the requirements specified hereinbefore for equipment, measurement of materials, and mixing, except as modified herein. Ready-mixed concrete not specified otherwise shall be mixed and delivered by one of the following methods:

1. Truck Mixing: Mix and deliver concrete in a truck mixer. Charge mixers with a ribbon fed mixture of aggregates and cement, or, in the absence of ribbon feed facilities, charge the aggregates before the cement. When mixing is begun during or immediately after charging, add a portion of the mixing water, not in excess of that required to produce the minimum acceptable slump, ahead of, or with, the other ingredients. Mixing speed shall be not less than 4 rpm for revolving drum mixers, and not less than 4 rpm nor more than 16 rpm for open-top mixers. Any turning of the drum during transportation shall be at the speed designated, by the manufacturer of the equipment, as agitating speed. Accompany each batch of concrete delivered at the job site with a time slip issued at the batching plant, bearing the time of departure therefrom and the signature of the inspector. Complete discharge of concrete from the drum within 1 1/2 hour or before the drum completes 300 revolutions after the introduction of water to the cement and aggregates.

2. Combination Central Plant and Truck Mixing (Shrink Mixing): Partially mix the concrete in a central plant mixer and complete the mixing in a truck mixer as specified herein.

3. Central Plant Mixing: Mixing shall begin within 30 minutes after cement has been added

to aggregates. When authorized in writing by the COTR non-agitation equipment approved by him may be used for transporting concrete. The time lapse between the introduction of the mixing water to the cement and aggregates and the placing of concrete in final position in the forms shall not exceed: (a) for agitating equipment - 60 minutes, air temp. less than 85 degrees F, 45 minutes, air temp. equal or greater than 85 degrees F, (b) for non-agitating equipment - 30 minutes.

C. Moisture Barriers:

1. Vapor Barrier: Provide vapor barrier beneath the entire concrete floor slab of the building. Provide vapor barrier as indicated. Place the material in the greatest widths and lengths practicable so as to eliminate joints wherever possible; where joints are necessary, lap the material not less than 6 inches for the side and end laps and sealed with approved adhesive. Torn, punctured, or damaged vapor barrier material shall be removed and replaced as directed, prior to he placing of concrete. Place concrete in a manner to preclude damage to the vapor barrier material.

D. Sand Bed: Provide 2-inch depth of sand over all vapor barriers.

3.2 PLACING CONCRETE:

A. General: Placing concrete shall be per ACI 301, Chapters 8 and 11, ACI 306R, and as follows.

B. Conveying: Convey concrete from the mixer to the forms as rapidly as practicable without causing segregation or loss of ingredients. Deposit the concrete as closely as practicable to its final position in the forms. Before the concrete is deposited in the forms, the free vertical drop of the concrete, at any point during conveying, shall not exceed 3 feet. Chuting will be permitted only where the concrete is deposited into a hopper before being placed in the forms. Use a telescoping drop chute to place concrete in walls and columns when the vertical lift of the forms exceeds 6 feet. Clean conveying equipment thoroughly before each run. Concrete which has segregated in conveying shall be removed and disposed of as directed by the COTR.

C. Depositing Concrete: No concrete shall be placed after there is evidence of initial set. Concrete placement will not be permitted when weather conditions prevent proper placement and consolidation. The placement of concrete in uncovered areas, during periods of precipitation will not be allowed. Dampen sand bed and porous subgrades before placing concrete. Forms shall be clean of dirt, construction debris, water, snow, and ice. Do not place fresh concrete on vertical supporting members such as columns and walls without approval of the COTR. Deposit concrete in approximately horizontal layers 12 to 20 inches deep in a manner to preclude the formation of cold joints between successive layers. The method of depositing concrete shall be such as to avoid displacing the reinforcement and segregating the aggregate. Work the concrete around the reinforcement and embedded fixtures and into corners and angles of the forms, care being taken to avoid overworking which may result in segregation.

D. On the bottom of beams, slabs, and girders where the congestion of steel near the forms makes placing difficult, deposit a layer of mortar equal to the approved concrete mix, with the coarse aggregates removed and of 5 to 6 inch slump, to cover the surface to a depth of approximately one inch before placing the concrete. Pumping of concrete

through aluminum pipe shall not be permitted.

E. Vibration: Compact all concrete, with the exception of concrete slabs 6 inches or less in depth with high frequency, internal mechanical vibrating equipment supplemented by hand spading and tamping. Consolidate concrete slabs 6 inches or less in depth by properly designed vibrating screeds, or by wood tampers, spading and settling with a heavy leveling straight edge. Vibrators shall be designed to operate with vibratory element submerged in the concrete, and shall have a frequency of not less than 6,000 impulses per minute when submerged. The vibrating equipment shall be adequate at all times in number of units and power of each unit to consolidate the concrete properly. Do not vibrate forms and reinforcement. Do not use vibrations to transport the concrete in the forms.

F. Construction Joints: Joints not shown on the drawings shall be made and located so as to least impair the strength of the structure and shall be subject to approval of the COTR. Joints shall be perpendicular to the main reinforcement.

1. Preparation of Surface: The surface of the concrete at all joints shall be thoroughly cleaned and all laitance removed.
2. Bonding: All construction joints shall be bonded except the slab on ground joints as shown on the drawings. Obtain bonding by one of the following methods:
   a. The use of a bonding compound for concrete, conforming to ASTM C 881.
   b. The use of suitable chemical retardant which delays but does not prevent setting of the surface mortar. Remove retarded mortar within 24 hours after placing to produce a clean exposed aggregate bonding surface.
   c. By roughening the surface of the concrete in proper manner which will expose the aggregate uniformly to 1/4 inch amplitude and will not leave laitance, loosened particles of aggregate, or damaged concrete at the surface.

G. Expansion Joints, Contraction Joints, Waterstops and Embedded Items:

1. Expansion joints shall not be less than 1/2-inch wide. Fill expansion joints not exposed to weather completely with preformed joint material. Fill expansion joints exposed to weather to a depth of one inch from the surface or face of the concrete with preformed joint material. Clean the one-inch deep space above the preformed material after the concrete has been cured, and when dry, fill flush with joint sealing material. Do not permit reinforcement or other embedded metal items bonded to the concrete, except dowels in floors bonded on only one side of joint, to extend continuously through any expansion joint.
2. Slab Shrinkage: Joints shall be as shown on the drawings. Saw cutting shall be done as soon as possible after the concrete hardens. The concrete is hard enough when the blade does not dislodge aggregate and when the edges of the cut do not ravel. Saw cutting will have been delayed too long if random cracking occurs before sawing.
3. Waterstops: The location of waterstops in construction joints and expansion joints shall be as indicated. Install waterstops per manufacturer's written instructions.
4. Other Embedded Items: Place all sleeves, inserts, anchors, and embedded items required for adjoining work or for its support prior to concreting. All sub-contractors, whose work is related to the concrete or must be supported by it, shall be given ample

notice and opportunity to introduce or furnish embedded items before the concrete is placed. Galvanize all ferrous metal sleeves, inserts, anchors, and other embedded ferrous items exposed to the weather or where rust would impair the appearance or finish of the structure.

5. Placing Embedded Items: Accurately position expansion joint material, waterstops, and embedded items and support against displacement. Fill voids in sleeves, inserts, and anchor slots temporarily with readily removable material to prevent the entry of concrete into the voids. Do not embed aluminum in concrete except where aluminum is protected from direct contact with the concrete.

H. Placing Concrete in Cold Weather: When air temperature has fallen to or is expected to fall below 50 deg F (4 deg C), uniformly heat water and aggregates as necessary before mixing to obtain a concrete mixture temperature conforming to Table 1.4.1 of ACI 306. Maintain protection for minimum times as noted in Table 1.4.2 of ACI 306 or use only the specified non-chloride, non-corrosive accelerator without heating the mix, in accordance with the manufacturer's recommendations when early set times are needed. When superplasticizers are used in the mix and the temperatures are going to be low, use only a third generation superplasticizer that can be used at the same dosage in all weather conditions without changing the setting time of the concrete, or varying the strength performance from the approved mix design.

1. The concrete may be placed at 40°F (4°C) and below down to 20°F (-7°C), ambient temperature, without heating the mix and maintaining the noted protection if the specified "Freeze Protection Admixture" is added to the mix per the manufacturer's instructions. The ambient temperature must be 20°F (-7°C) or higher until initial set is reached and the hardened concrete has been sealed to prevent the ingress of additional water. After initial set and sealing, the ambient temperature may fall with no damage to the concrete.
2. Do not use frozen materials or materials containing ice or snow. Do not place concrete on frozen subgrade or on subgrade containing frozen materials.
3. Do not use calcium chloride, salt, and other materials containing antifreeze agents or chemical accelerators, unless otherwise accepted in mix designs.

I. Placing Concrete in Hot Weather: Take extra care to reduce the temperature of the concrete being placed, and to prevent rapid drying of newly placed concrete. When the outdoor ambient temperature is more than 90 degrees F, the temperature of the concrete as placed should not exceed 90 degrees F; shade the fresh concrete as soon as possible after placing; and start curing as soon as the surface of the fresh concrete is sufficiently hard to permit it without damage. Concrete placement temperatures shall be controlled by the Contractor at his expense and shall not be limited to:

a. shading and cooling the aggregates;
b. avoiding use of hot cement;
c. cooling mixing water by additions of ice;
d. insulating water supply lines and tanks;
e. insulating mixer drums or cooling them with sprays or wet burlap coverings;
f. working only at night; and

g. addition of a retarder or water reducing retarder in the mix, if approved by the COTR. Additional recommended practices may be found in ACI 305.

J. Pump Concrete: If pumping of concrete from the mixer to the forms is used, at least 10 days prior to placement of the concrete, submit the following certification, information and date for record:

1. the name, type and capacity of the proposed pump,
2. a statement from the pump manufacturer that the proposed pump will pump the specified class of concrete without changes to the approved mix proportions and slump, and
3. a certified statement that all concrete forms to receive pumped concrete have been designed to withstand the concrete pressure in its plastic condition as a result of the proposed vertical placement rate (ft/hr.) and the expected ambient temperatures during pumping.

3.3 FLOOR AND SLAB FINISHES:

A. General: The finishes specified herein include surface finishes, treatments and toppings, for floors and slabs. For floors in which drains occur, exercise special care to slope the floors uniformly to the drains. All floor slabs where finish is not indicated or specified shall receive a float finish. Do not place dry cement directly upon the new concrete surface to absorb excess moisture.

B. Placing and Screeding Normal Concrete Slab or Base Slab: Concrete shall be placed, consolidated and immediately struck off to bring the top surface of the slab to proper contour, grade and elevation. This operation may be followed immediately by a darbying or bull floating or bull floating of the surface with wooden, aluminum or magnesium tools so as to correct any unevenness. Complete striking-off and darbying before bleed water appears on the surface of the freshly-placed concrete. No further work shall then be performed until the bleed water has evaporated and the concrete has attained a set sufficient for floating and sufficient to support the weight of the finisher and/or equipment. If the bleed water has not disappeared by the time floating of the surface is to start, drag the excess water off the surface using a rubber hose. At no time shall dry cement be used to absorb bleed water.

1. Float Finish: Provide a float finish for all floors. Accomplish the finishing in accordance with ACI 30l.

3.4 CURING AND PROTECTION (FLOORS AND SLABS):

A. General: After curing is completed, the Contractor may use the floor or slab for subsequent operations provided that measures are taken to prevent staining the surface by tire marks, oil or any other material used by the Contractor. The Contractor shall clean up such stains at his own expense.

B. Curing: Cure finished floor surfaces adequately as specified hereinafter.

1. Curing With Water: Moist or wet-curing with water or by complete covering with waterproof membrane sheets shall be continuous for 7 days at temperatures of 60 degrees F and above, and for longer periods at lower temperatures, as necessary.

2. Liquid Membrane-Forming and Chemical Curing-Sealing Compounds: These compounds shall meet the water-retention and other requirements specified hereinbefore for liquid membrane-forming compounds or for liquid chemical compound curing, at an application rate recommended by the manufacturer. Apply them to the concrete surface immediately after final finishing and as soon as the floor surface will not be marred by their application. Surfaces on which resilient floor tile is to be later applied shall be cured only with water or a compound which the manufacturer attests is compatible with cements used for affixing resilient tile.

3. Cleaning: Upon completion of the work, clean all concrete floors, except those having sealer-hardener finish, as follows: After sweeping with an ordinary broom to remove the loose dirt, wet the finish with soapsuds and rub with a scrubbing machine fitted with a wire brush or fine steel wool. Mop up the suds and flush the surface with clean warm water, after which a final scrubbing by hand in lieu of machine scrubbing will be permitted. Clean floors having sealer-hardener finish of loose dirt and debris by sweeping with ordinary brooms or by other suitable method.

3.5 FIELD INSPECTION, SAMPLING AND TESTS:

A. Acceptance: The acceptance of the concrete work, including all repairs, shall be per ACI 301, Chapter 18.

B. General: All sampling and testing shall be made at the Contractor's expense, taken at random locations and at such times to correctly reflect the quality of the materials and work throughout the project. Additional sampling and testing may be required at the COTR's discretion. Sampling and tests shall be performed by an approved commercial testing laboratory. Minimum number of samples are identified as specified herein.

C. Plant Quality Control: The ready-mix concrete plant shall have a quality control system that will assure that the concrete conforms to the specified requirements The plant quality control shall be approved by the Contractor. At the completion of all concrete work, the plant's coefficient of variation and standard deviation results for each class of concrete placed shall be determined in accordance with ACI 214 and submitted to the COTR.

D. Cement Testing: Will be performed by the contractor with results to the COTR.

E. Sampling:

1. Conducting Sampling and Testing: The frequency of sampling and testing of materials for field tests shall be as specified hereinafter, and shall be performed at such other times as necessary to document contract compliance. All materials and identification of material sources shall be submitted and approved per Division One not less than 30 days prior to the use of such materials in the work.

2. Sampling Aggregates at Batch Plant: Before delivery of concrete to the job site, sample fine and coarse aggregates in accordance with ASTM D 75 by the Contractor's laboratory. Secure samples at the concrete batch plant at a frequency specified at Table 1.

3. 3.8.5.3 Sampling Concrete: Obtain samples of plastic concrete in accordance with ASTM C 172. Quality Control samples may be taken at the concrete batch plant; however, samples or verification of concrete strength and slump for submittal to the Government shall be taken at the job-site as the concrete is delivered if concrete is

pumped at the discharge end of the pipeline in accordance with ASTM C 172. The frequency of sampling shall be in accordance with Table 1.

F. Testing:

1. Quarry Aggregate Testing: The Contractor's laboratory shall test the aggregates samples at the quarry source. Determine by sieve analysis the separate sizes of coarse and fine aggregates and combine the results in accordance with the proportions of the mix design. Submit per Division One the individual results and the combined results to the COTR. The combined aggregates proportioned at the concrete plant using separate sizes of aggregates shall conform to the specified gradation. Gradation of the separate individual sizes of coarse and fine aggregates shall conform to the requirements specified herein. In Tables 2, 3 and 4, the letter "X" is the gradation which the Contractor proposes to furnish for the specific sieve sizes. In addition to the grading, the distribution of the aggregates shall be as follows: fine aggregate - the difference between the total percentage passing the No. 16 sieve and the total percentage passing the No. 30 sieve shall be between 10 and 35, and the difference between the percent passing the No. 30 and No. 50 sieves shall be between 10 and 30; coarse aggregates, for the 1-inch by No. 4 nominal size - material passing the 3/4-inch sieve, not more than 50 percent of such material shall pass the 3/8-inch sieve. Make additional sieve analysis and other aggregate tests for conformance with ASTM C 33 whenever the sieve analysis fails to conform or whenever there is a change of aggregate source, or whenever the consecutive concrete strength results to fail to conform to the specified strengths.

2. Concrete Testing:

   a. Strength Tests: The strengths specified and the design mix shall be verified by the Contractor's laboratory, during placement of concrete at intervals, by testing standard cylinders of samples taken at the job site. Make one set of four test cylinders for each 50 cubic yards or for each 2000 square feet of surface area, of each strength of concrete placed, but take at least 4 test cylinders each day for each strength of concrete placed. No more than 4 cylinders shall be taken from any one batch. The making and curing of test specimens shall be in accordance with ASTM C 31. The Contractor's laboratory shall furnish the necessary labor, materials, and facilities for molding the samples, handling, and storing the cylinders at the site of the work. For the first 24 hours after molding, keep the cylinders moist in a storage box, constructed and located so that its interior air temperature will be between 60 and 80 degrees F. Transport the cylinders at the end of 24 hours to the laboratory.

   b. Tests for consistency of concrete: The slump shall be as specified when measured in accordance with ASTM C 143. Take samples for slump determination from the concrete during placing in the forms. Make tests as follows:

      1. At the beginning of a concrete placement operation and at subsequent intervals to ensure that the specification requirements are met.

      2. Whenever test cylinders are made.

   c. Yield Tests: Make yield tests in accordance with ASTM C 138. Make tests:

      1. Whenever the yield of a concrete mix is challenged by the COTR.

      2. Twice per day on concrete.

      3. Whenever materials or mix proportions are changed.

d. Temperature Tests: Make temperature tests

1. In hot or cold weather conditions, at frequent intervals, until satisfactory control is established.
2. Whenever test cylinders are made.

e. Site mix shall be sampled and tested for slump, yield and strength as follows: After satisfactory control is established, perform one test for each 50 to 100 cubic yards of concrete, depending on size of mixer.

f. Contractor-Furnished Mix Design: If the evaluation of the 28-day test results of any concrete to be used in the project shows that the concrete strength is below the specified limits and does not meet other requirements of this specification, the Contractor shall make all necessary adjustments as approved by the COTR and at the Contractor's expense.

END OF SECTION 03 30 00

SECTION 03 81 00 - CONCRETE CUTTING

PART 1 – GENERAL

1.1 DEFINITION

A. "Cutting and Patching" is defined to include the cutting and patching of nominally completed and previously existing concrete, steel, wood and miscellaneous metal structures; piping and pavement, in order to accommodate the coordination of work, or the installation of other facilities or structures or to uncover other facilities and structures for access or inspection, or to obtain samples for testing, or for similar purposes.

1.2 REQUIREMENTS OF STRUCTURAL WORK

A. Structural work shall not be cut and patched in a manner that results in a reduction of load-carrying capacity or load/defection ratio.

B. Prior to cutting and patching the following categories of work, the contractor shall obtain the COTR's approval to proceed with:

1. Structural steel
2. Miscellaneous structural metals, including equipment supports, stair systems and similar categories of work
3. Structural concrete
4. Foundation construction
5. Asphalt pavement, concrete or asphalt curb/gutter, and concrete sidewalk.

1.3 OPERATIONAL AND SAFETY LIMITATIONS

A. The contractor shall not cut and patch operational elements and safety-related components in a manner resulting in a reduction of capacities to perform in the manner intended or resulting in decreased operational life, increased maintenance or decreased safety.

B. Before cutting and patching the following categories of work, the contractor shall obtain the COTR's approval to proceed with:

1. Sheeting, shoring and cross bracing
2. Operating systems and equipment
3. Water, moisture, vapor, air, smoke barriers, membranes and flashing
4. Noise and vibration control elements and systems
5. Control, communication, conveying and electrical wiring systems.

1.4 VISUAL REQUIREMENTS

A. The Contractor shall not cut and patch work which is exposed on the exterior or exposed in occupied spaces, in a manner resulting in a reduction of visual qualities or resulting in substantial evidence of the cut and patch work, both as judged solely by the COTR. The contractor shall remove and replace work judged by the COTR to have been cut and patched in a visually unsatisfactory manner.

1.5 APPROVALS

A. When prior approval for cutting and patching is required, the contractor shall submit the request and obtain approval prior to performing the work. The request should include a description of why cutting and patching cannot reasonably be avoided; how it will be performed; how structural elements (if any) will be reinforced; products to be used; firms and trades people who will perform the work; approximate dates of the work; and anticipated results in terms of structural, operational, and visual variations from the original work.

PART 2 – PRODUCTS

2.1 MATERIALS USED IN CUTTING AND PATCHING

A. Unless otherwise indicated, the contractor shall provide materials for cutting and patching which will result in an equal-or-better product than the material being cut and patched, in terms of performance characteristics and including visual effects where applicable. Use material identical with the original materials where feasible.

B. Materials shall comply with the requirements of the Technical Specifications wherever applicable.

PART 3 – EXECUTION

3.1 PREPARATION

A. The contractor shall provide adequate temporary support for work to be cut to prevent failure

B. The contractor shall provide adequate protection of other work during cutting and patching.

3.2 INSTALLATION

A. The contractor shall employ skilled trades people to perform cutting and patching. Except as otherwise indicated, the contractor shall proceed with cutting and patching at the earliest feasible time and perform the work promptly.

B. The contractor shall use methods least likely to damage work to be retained and work adjoining.

1. In general, where physical cutting action is required, the contractor shall cut work with sawing and grinding tools, not with hammering and chopping tools. Openings through concrete work shall be core-drilled.
2. Comply with the requirements of Technical Specifications wherever applicable.

C. The contractor shall patch with seams, which are as invisible as possible and comply with specified tolerance for the work.

D. The contractor shall restore exposed seams of patched area; and, where necessary, extend finish restoration onto retained work adjoining, in a manner, which will eliminate evidence of patching.

END OF SECTION 03 81 00

SECTION 23 00 00 - BASIC MECHANICAL MATERIALS AND METHODS

PART 1 - GENERAL

1.1 SUMMARY

A. This Section includes equipment data and methods for mechanical work for this project.

1.2 CODE REQUIREMENTS AND PERMITS

A. The rules, regulations and specifications listed herein shall be considered minimum requirements. They shall not prevent the Contractor from furnishing and installing higher grades of material and workmanship than are specified herein or when required by the Specification and Drawings. Perform work in accordance with applicable statutes, ordinances, code in force during construction period, and regulations of governmental authorities having jurisdiction. Obtain and pay for fees, permits and inspections.

1.3 SUBMITTALS

A. General: Submit the following according to the Conditions of the Contract and Division 01 33 00 Submittal Procedures.

B. Product data for each type of ventilation and heating equipment specified, including fixture accessories, equipment, supports, construction details, dimensions of components, and finishes.

C. Shop drawings for exhaust and intake hoods and stainless steel drip pan.

D. Control system and components.

1.4 SPACE REQUIREMENTS

A. Consider space limitations imposed by contiguous work in selection and location of equipment and material. Do not provide equipment or material that is unsuitable in this respect.

1.5 PROTECTION

A. Adequately protect work, equipment, fixtures and materials. At completion, work shall be clean and in good condition. Provide protection of existing equipment from water, dust, corrosion, and physical damage.

1.6 QUALITY ASSURANCE

A. Warranty: Each equipment item shall be provided with a service and parts guarantee for the period stated. Under the warranty, the Contractor shall provide services incidental to the proper performance of the systems and equipment without charge to the FAA.

B. Equipment Selection: Equipment of greater or larger power, dimensions, capacities, and ratings may be furnished provided such proposed equipment is approved in writing and connecting mechanical and electrical services, circuit breakers, conduit, motors, bases, and equipment spaces are increased. No additional costs will be approved for these increases, if larger equipment is

approved. If minimum energy ratings or efficiencies of the equipment are specified, the equipment must meet the design requirements and commissioning requirements.

1.7 DELIVERY, STORAGE, AND HANDLING

A. Deliver equipment in manufacturer's protective packing, crating, and covering.

1.8 SEQUENCING AND SCHEDULING

A. Coordinate mechanical equipment installation with other building components.

B. Arrange for chases, slots, and openings in building structure during progress of construction to allow for mechanical installations.

C. Coordinate the installation of required supporting devices and set sleeves in poured-in-place concrete and other structural components as they are constructed.

D. Sequence, coordinate, and integrate installations of mechanical materials and equipment for efficient flow of the Work. Coordinate installation of large equipment requiring positioning prior to closing in the building.

E. Coordinate connection of electrical services.

F. Coordinate connection of mechanical systems with exterior underground and overhead utilities and services. Comply with requirements of governing regulations, franchised service companies, and controlling agencies.

PART 2 - PRODUCTS

2.1 SELF CONTAINED AIR CONDITIONER

GENERAL

Furnish and install two self-contained unitary air conditioners. The units are to be manufactured by Addison or equivalent. Model # VCP-240-L-3-3-C.. Unit shall be shipped from the factory with a full operating refrigerant and oil charge. All field wiring shall be in accordance with the National Electric code and all local codes.

PART 3 - EXECUTION

3.1 EQUIPMENT INSTALLATION – COMMON REQUIREMENTS

A. Install equipment to provide the maximum possible headroom where mounting heights are not indicated.

B. Install equipment according to approved submittal data. Portions of the Work are shown only in diagrammatic form. Refer conflicts to the CO.

C. Install equipment level and plumb, parallel and perpendicular to other building systems and components in exposed interior spaces, except where otherwise indicated.

D. Install mechanical equipment to facilitate servicing, maintenance, and repair or replacement of equipment components. Connect equipment for ease of disconnecting, with minimum of interference with other installations. Extend grease fittings to an accessible location.

E. Install equipment giving right-of-way to piping systems installed at a required slope.

3.2 LABELING AND IDENTIFYING

A. Equipment: Install engraved plastic laminate sign or equipment marker on or near each major item of mechanical equipment.

1. Lettering Size: Minimum 1/4-inch (6-mm) -high lettering for name of unit where viewing distance is less than 2 feet (0.6 m), 1/2-inch (13-mm) -high for distances up to 6 feet (1.8 m), and proportionately larger lettering for greater distances. Provide secondary lettering 2/3 to 3/4 of size of principal lettering.

2. Text of Signs: Provide text to distinguish between multiple units, inform operator of operational requirements, indicate safety and emergency precautions, and warn of hazards and improper operations, in addition to name of identified unit.

B. Adjusting: Relocate identifying devices which become visually blocked by work of this Division or other Divisions.

3.3 PAINTING AND FINISHING

A. Damage and Touch Up: Repair marred and damaged factory-painted finishes with materials and procedures to match original factory finish.

3.4 CUTTING AND PATCHING

A. Cut, channel, chase, and drill floors, walls, partitions, ceilings, and other surfaces necessary for mechanical installations. Perform cutting by skilled mechanics of the trades involved.

B. Repair cut surfaces to match adjacent surfaces.

END OF SECTION 23 00 00

SECTION 23 09 00 - CONTROL SYSTEMS EQUIPMENT

PART 1 - GENERAL

1.1 SUMMARY

A. This Section includes control equipment for Self Contained Air Conditioners and their related mechanical systems and components.

1.2 SYSTEM DESCRIPTION

A. Control system to be provided consists of thermostats, sensors, indicators, final control elements, direct digital controllers, other apparatus, and accessories required to operate the packaged air conditioning units in a lead lag configuration. The control system shall also monitor refrigerant pressure, current draw, as well as supply and return air temperatures. The system shall also have the necessary sensors and accessories to operate a motorized low ambient damper for each unit.

1.3 SUBMITTALS

A. General: Submit each item in this Article according to the Conditions of the Contract and Division 01 33 00 Specification Sections.

B. Product Data for each type of product specified. Include manufacturer's technical Product Data for each control device furnished, indicating dimensions, capacities, performance characteristics, electrical characteristics, finishes of materials, installation instructions, and startup instructions.

C. Shop Drawings from manufacturer detailing equipment assemblies and indicating dimensions, weights, loadings, required clearances, method of field assembly, components, and location and size of each field connection. Submit damper leakage and flow characteristics, plus size schedule for controlled dampers.

D. Shop Drawings containing the following information for each control system:

1. Each control device labeled with setting or adjustable range of control.

2. Diagrams for all required electrical wiring. Clearly differentiate between factory-installed and field-installed wiring.

E. Wiring diagrams detailing wiring for power, signal, and control systems and differentiating clearly between manufacturer-installed and field-installed wiring.

F. Maintenance data for control systems equipment to include in the operation and maintenance manual specified in Division 1. Include the following:

G. Interconnection wiring diagrams with identified and numbered system components and devices.

H. Project Record Documents: Record actual locations of control components, including thermostats. Revise Shop Drawings to reflect actual installation and operating sequences.

1.4 QUALITY ASSURANCE

A. Installer Qualifications: Engage an experienced Installer specializing in control system installations.

B. Manufacturer Qualifications: Engage a firm experienced in manufacturing control systems similar to those indicated for this Project and that have a record of successful in-service performance.

C. Comply with NFPA 90A.

D. Comply with NFPA 70.

1.5 DELIVERY, STORAGE, AND HANDLING

A. Store equipment and materials inside and protected from weather.

B. Factory-Mounted Components: Where control devices specified in this Section are indicated to be factory mounted on equipment, arrange for shipping control devices to unit manufacturer.

1.6 EXTRA MATERIALS

A. Furnish extra materials described below that match products installed, are packaged with protective covering for storage, and are identified with labels clearly describing contents.

PART 2 - PRODUCTS

2.1 MANUFACTURERS

A. Available Manufacturers: Subject to compliance with requirements, manufacturers offering products that may be incorporated in the Work include, but are not limited to, the following:

1. Electric Control Systems and Components:

a. Barber-Coleman Co.; Environmental Controls.

b. Honeywell, Inc.; Commercial Buildings Group.

c. Johnson Controls, Inc.; Controls Group.

d. Landis & Gyr Powers, Inc.

e. Robertshaw Controls Co.

2.2 THERMOSTATS

A. Thermostats shall be provided by the manufacturer of the Air Conditioning units as an option. See section 23 80 00 Decentralized HVAC equipment.

2.3 CONTROL PANEL

A. Control Panel: Provide unitized cabinet with suitable brackets for wall or floor mounting, located as indicated on drawings

2.4 DAMPERS

A. Provide dampers that are equipped with operators of sufficient power to control dampers, without flutter or hunting, through the entire operating range at air velocities at least 20 percent greater than maximum design velocity.

2.5 DAMPER ACTUATORS

A. Damper actuators shall provide the torque necessary in accordance with damper manufacturer's instructions to modulate the dampers smoothly over its full range of operation and torque shall be at least 6 inch-pounds/1 square foot of damper area for opposed blade dampers and 9 inch-pounds/1 square foot of damper area for parallel blade dampers.

2.6 PRESSURE TRANSMITTER

A. Provide the indicating type pressure transmitters for refrigerant service. Provide transmitter range suitable for system operating characteristics. Provide output that is proportional to system pressure and is electronic. Provide indicating receiver with a matched scale range.

2.7 CURRENT TRANSDUCERS

A. Current transducers shall accept an AC current input and shall have an accuracy of +/- 2 percent of full scale. An integral power supply shall be provided if required for the analog output signal. The device shall have a means for calibration.

2.8 TEMPERATURE SENSORS

A. Sensor Ranges and Accuracy -Temperature sensors may be provided without transmitters. Temperature sensors, including transmitter if used, shall have minimum operating ranges, minimum accuracy and maximum drift as specified below for the application:

1. Duct Temperature

a. Operating Range: 40 to 140 degrees F.

b. Accuracy: +/- 2 degrees F.

c. Drift: Maximum 2 degrees F per year.

2.9 DIRECT DIGITAL CONTROL (DDC) CONTROLLER

A. All sensors and transducers shall tie back into a DDC controller, that will control the lead lag function of the ACU's. The controller shall also have a interactive display panel, where refrigerant pressure, unit current draw, supply and return air temperature could be monitored.

2.10 IDENTIFICATION

A. General: Panel face and field devices shall be permanently labeled with phenolic resin nameplates.

1. The nameplate shall be black with white lettering. Lettering shall be a minimum of 1/4" high or as indicated.

2. The nameplate shall include the device IDs shown on the as-built documentation.

3. Submit a complete list of nameplates prior to ordering.

B. Wire/cable designation tape markers: Provide wrap-around markers on each conductor to designate the exact termination point for the conductor.

1. The markers shall be vinyl or vinyl cloth, self-adhesive wrap-around conductor markers with pre-printed numbers and letters for designation purposes.

PART 3 - EXECUTION

3.1 INSTALLATION

A. Install equipment as indicated to comply with manufacturer's written instructions.

B. Verify location of thermostats and other exposed control sensors with plans and room details before installation. Locate 60 inches (1524 mm) above floor.

C. Install labels and nameplates to identify control components according to Division 23 Sections specifying mechanical identification.

3.2 ELECTRICAL WIRING AND CONNECTIONS

A. Install raceways, boxes, and cabinets according to section 26 05 33 "Raceways, Boxes, and Cabinets."

B. Install building wire and cable according to section 26 05 19 "Low Voltage Power Conductors and Cables."

C. Install signal and communication cable according to section 26.

1. Conceal cable, except in mechanical rooms and areas where other conduit and piping are exposed.

2. Install exposed cable in raceway.

3. Install concealed cable in raceway.

4. Bundle and harness multi conductor instrument cable in place of single cables where a number of cables follow a common path.

5. Fasten flexible conductors, bridging cabinets and doors, neatly along hinge side; protect against abrasion. Tie and support conductors neatly.

6. Number-code or color-code conductors, except local individual room controls, for future identification and servicing of control system.

D. Connect electrical components to wiring systems and to ground as indicated and instructed by manufacturer. Tighten connectors and terminals, including screws and bolts, according to equipment manufacturer's published torque-tightening values for equipment connectors. Where manufacturer's torquing requirements are not indicated, tighten connectors and terminals according to tightening requirements specified in UL 486A.

3.3 COMMISSIONING

Verify operation of the Air Conditioning units and related mechanical equipment.

A. Test and adjust controls and safeties.

B. Replace damaged or malfunctioning controls and equipment.

C. Start, test, and adjust control systems.

D. Demonstrate compliance with requirements.

E. Adjust, calibrate, and fine tune circuits and equipment to achieve sequence of operation specified.

END OF SECTION 23 09 00

SECTION 23 30 00 – HVAC DISTRIBUTION

PART 1 - GENERAL

1.1 SUMMARY

A. This Section includes rectangular metal ducts , flexible connectors, and exterior hoods for air conditioning systems in pressure classes from minus 2 inches to plus 2 inches water gage.

B. Related Sections: The following sections contain requirements that relate to this Section:

1. Section 23 80 00 "Decentralized HVAC Equipment."

1.2 DEFINITIONS

A. Sealing Requirements Definitions: For the purposes of duct systems sealing requirements specified in this Section, the following definitions apply:

1. Seams: A seam is defined as joining of two longitudinally (in the direction of airflow) oriented edges of duct surface material occurring between two joints. All other duct surface connections made on the perimeter are deemed to be joints.

2. Joints: Joints include girth joints; branch and subbranch intersections; so-called duct collar tap-ins; fitting subsections; louver and air terminal connections to ducts; access door and access panel frames and jambs; duct, plenum, and casing abutments to building structures.

1.3 SYSTEM PERFORMANCE REQUIREMENTS

A. The duct system design, as indicated is for supply and return air for self contained air conditioners. Changes or alterations to the layout or configuration of the duct work must be specifically approved in writing.

1.4 SUBMITTALS

A. General: Submit the following in accordance with Conditions of Contract and Division 1 Specification Sections.

B. Shop drawings from duct fabrication shop.

1. Fabrication, assembly, and installation details, including plans, elevations, sections, details of components, and attachments to other work.

2. Reinforcing details and spacing.

3. Seam and joint construction details.

4. Hangers and supports, including methods for building attachment, vibration isolation, and duct attachment.

5. Exhaust and Intake hoods for each self contained air conditioner.

C. Coordination drawings for ductwork installation in accordance with Division 15 Section "Basic Mechanical Requirements." In addition to the requirements specified in "Basic Mechanical Requirements" show the following:

1. Spatial coordination with other systems installed in the same space with the duct systems.

2. Welding certificates including welding procedures specifications, welding procedures qualifications test records, and welders' qualifications test records complying with requirements specified in "Quality Assurance" below.

1.5 QUALITY ASSURANCE

A. NFPA Compliance: Comply with the following NFPA Standards:

1. NFPA 90A, "Standard for the Installation of Air Conditioning and Ventilating Systems," except as indicated otherwise.

1.6 DELIVERY, STORAGE, AND HANDLING

A. Deliver and store galvanized steel sheets with mill-applied adhesive protective paper, maintained through fabrication and installation.

PART 2 - PRODUCTS

2.1 SHEET METAL MATERIALS

A. Sheet Metal, General: Provide sheet metal in thicknesses indicated, packaged and marked as specified in ASTM A 700.

B. Galvanized Sheet Steel: Lock-forming quality, ASTM A 527, Coating Designation G 90. Provide mill phosphatized finish for exposed surfaces of ducts exposed to view.

C. Stainless Steel Type 304, Provide sheet stainless steel ASTM A480/A480M-03c metal in thicknesses indicated.

2.2 FLEXIBLE CONNECTORS

A. General: Flame-retardant or noncombustible fabrics, coatings, and adhesives complying with UL Standard 181, Class 1.

B. Conventional, Indoor System Flexible Connectors Fabric: Glass fabric double coated with polychoroprene.

2.3 HANGERS AND SUPPORTS

A. Building Attachments: Concrete inserts, powder actuated fasteners, or structural steel fasteners appropriate for building materials. Do not use powder actuated concrete fasteners for lightweight aggregate concretes.

B. Hangers: Galvanized sheet steel, or round, uncoated steel, threaded rod.

1. Straps and Rod Sizes: Conform with accepted industry practice for industrial duct construction, IDC 31.

C. Duct Attachments: Sheet metal screws, blind rivets, or self-tapping metal screws; compatible with duct materials.

2.4 RECTANGULAR DUCT FABRICATION

A. General: Except as otherwise indicated, fabricate rectangular ducts with galvanized sheet steel, in accordance with SMACNA "HVAC Duct Construction Standards," Tables 1-3 through 1-19, including their associated details. Conform to the requirements in the referenced standard for metal thickness, reinforcing types and intervals, tie rod applications, and joint types and intervals.

1. Fabricate rectangular ducts in lengths appropriate to reinforcement and rigidity class required for pressure classification.

2. Provide materials that are free from visual imperfections such as pitting, seam marks, roller marks, stains, and discolorations.

B. Crossbreaking or Cross Beading: Crossbreak or bead duct sides that are 19 inches and larger and are 20 gage or less, with more than 10 sq. ft. of unbraced panel area, as indicated in SMACNA "HVAC Duct Construction Standard," Figure 1-4, unless they are lined or are externally insulated.

2.5 STAINLESS STEEL EXTERIOR HOODS

A. Provide and Install 10 ga. 304 Stainless steel exhaust and intake hoods as detailed on drawing BOS-700006-M002.

B. Hoods shall be provided with insect and bird screen. Insect screen shall be removable.

C. Contractor shall submit shop drawings of hoods to FAA for approval prior to fabrication.

PART 3 - EXECUTION

3.1 DUCT INSTALLATION, GENERAL

A. Duct System Pressure Class: Construct and install engine generator duct work to 2 inches water gauge duct pressure classification.

B. Install ducts with the fewest possible joints.

C. Use fabricated fittings for all changes in directions, changes in size and shape, and connections.

1. Locate ducts, except as otherwise indicated, vertically and horizontally, parallel and perpendicular to building lines. Install duct systems in shortest route that does not obstruct useable space or block access for servicing building and its equipment.

3.2 HANGING AND SUPPORTING

A. Upper attachments to structures shall have an allowable load not exceeding 1/4 of the failure (proof test) load but are not limited to the specific methods indicated.

3.3 CONNECTIONS

A. Equipment Connections: Connect equipment with flexible connectors where indicated on the drawings and specified herein.

3.4 FIELD QUALITY CONTROL

A. Remake leaking joints as required and apply sealants to achieve specified maximum allowable leakage.

B. All sharp edges shall be covered to prevent personnel injury. Roll edges or cover with sheet metal and rubber gasket.

END OF SECTION 23 30 00

SECTION 23 80 00 – DECENTRALIZED HVAC EQUIPMENT

PART 1 GENERAL

1.1 SUMMARY

A. This Section includes Self Contained Air Conditioning Units.

B. Related Sections: The following sections contain requirements that relate to this section:

1. Division 26 28 16 "Enclosed Switches and Circuit Breakers" for disconnect switches.

2. Division 26 05 19 “Low Voltage Electrical Power Conductors and Cables” for wiring.

1.2 SUBMITTALS

A. General: Submit the following in accordance with Conditions of Contract and Division 1 Specification Sections:

1. Product data for selected models, including specialties and accessories.

2. Shop drawings from manufacturer detailing equipment assemblies and indicating dimensions, weights, required clearances, components, and location and size of field connections.

3. Wiring diagrams that detail power, signal, and control wiring. Differentiate between manufacturer installed wiring and field installed wiring.

4. Product certificates, signed by manufacturers of fan certifying that their products comply with specified requirements.

5. Maintenance data for fan for inclusion in Operating and Maintenance Instruction specified in Division 01 33 00 and Division 23 00 00 "Basic Mechanical Material and Methods."

1.3 QUALITY ASSURANCE

A. NEMA Compliance: Motors and electrical accessories shall comply with NEMA standards.

B. Electrical Component Standard: Components and installation shall comply with NFPA 70 "National Electrical Code."

1.4 DELIVERY, STORAGE AND HANDLING

A. Lift and support units with the manufacturer's designated lifting or supporting points.

B. Disassemble and reassemble units as required for movement into the final location following manufacturer's written instructions.

C. Deliver units as a factory assembled unit to the extent allowable by shipping limitations, with protective crating and covering.

PART 2 PRODUCTS

A. General

Furnish and install the Addison VCP self-contained air-cooled vertical unit or equivalent per plans and specifications. Capacity, efficiency and air delivery shall not be less than scheduled. Unit shall be provided with factory installed features listed below. Performance shall be rated ARI Standard 360. Unit shall be designed to conform to appropriate UL Standards by ETL, a nationally recognized testing laboratory. The unit shall be completely factory-assembled, tested, piped, wired and shipped in one section. The equipment specified under this section shall be a standard product of the manufacturer and shall be fully depicted in current catalog data.

B. Heavy Duty Cabinet

All models shall be constructed of heavy gauge galvanized steel with the interior of the entire unit thermally insulated with 1-inch thick fiberglass with an R-value of 4.2.

Insulation surface exposed to the air stream shall be finished with an acrylic coating that is resistant to air erosion and microbial growth. The design of the cabinet shall allow access to the electrical panel without impairing unit operation. Heavy panels shall be fitted with plastic insert handles for ease of removal.

C. Paint Finish

Unit shall be constructed of hot dipped galvanized steel that is chemically treated with zinc phosphate,coated with 0.2 to 0.3 MIL polyurethane primer then finished with .07 to .08 MIL polyester top coat, these attractive units are suitable for a variety of applications. Finish shall meet or exceeds 1,000 hour Salt Spray Test per ASTM B117 97.

D. Compressor

High efficiency scroll shall be used. Compressor mountings shall be designed to reduce vibration transmission to the unit structure and minimize piping stress.

E. Compressor Protection

All compressors have crankcase heaters. Compressors through 8 tons have conventional inherent internal line break protection. Compressors 10 tons and up are protected by an electronic motor protection system.

F. Sloped Stainless Steel Condensate Drain Pan

The condensate drain pan is sloped to comply with ASHRAE Standard 62-1089R and fabricated from stainless steel. The bottom is then insulated with 1" fiberglass insulation. The drain pan is furnished with single or dual MPT drain fittings positioned at the exterior of the cabinet.

G. Storm Water Drain

Condenser coil shall be furnished with a separate drain pan to handle blowing rain that enters through the condenser coil. It shall be fitted with dual 3/4" (threaded) drains.

H. Compressor Control Module

Suggested Sequence of Operation for Compressor Control:

Sequence: On call for cooling, evaporator blower motor starts. After 1 second delay, condenser blower motor starts. After 3 second delay, compressor #1 starts. After another 3 second delay, compressor #2 starts. Five-minute anti-short-cycle time delay is also included. (Delay begins upon opening of thermostat). Compressor operation is locked out upon opening of high pressure cutout or low-pressure cutout. Remote reset of cutout at thermostat or by removing and reapplying power to unit. Low-pressure cutout is bypassed for 90 seconds at start-up to avoid nuisance trips. Switched 24-vac output shall be available for remote fault indication.

I. Evaporator and Condenser Coils

The coils shall be aluminum plate-finned formed on multiple rows of seamless copper tubing arranged in a staggered tube configuration. The tubes shall be mechanically expanded, firmly bonding the tube to the shoulder of each fin. Multiple compressor models will have face split evaporator coils for maximum dehumidification at part load conditions.

J. Evaporator and Condenser Blower and Motor

Forward-curved, statically and dynamically balanced double inlet, double wide centrifugal blowers shall be used for the evaporator and condenser air. Blower wheels shall be fabricated of galvanized steel. Blower housings shall be fabricated of galvanized steel. The blower wheels shall be mounted on a solid steel shaft. Drives 5 HP and larger shall be supported by pillow block bearing on drive end and sealed ball bearings on opposite end and center. The shaft shall be driven by adjustable belt drive sheaves connected to a 1725- rpm motor with sealed ball bearings. The sealed bearings on both the blower shaft and motor shall not require lubrication. Evaporator blower motors 5 HP and larger shall be externally protected (manual reset). Condenser blower motors shall be externally protected and are all rated for operation up to 60°C (140°F).

K. Refrigerant Circuit

Included in each refrigerant circuit shall be a filter-drier, high pressure safety control, low pressure safety control/loss of charge protector, gauge connections for high and low pressure readings and thermal expansion valve. The expansion valve shall have adjustable superheat and distributors to meter the refrigerant evenly to the evaporator refrigerant circuits.

L. Fully Insulated Refrigerant Lines

To prevent condensation that would collect in the unit base the unit shall have fully insulated refrigerant lines.

M. Service Connections

The unit shall have service connections factory-installed in compressor suction and discharge lines for ease of servicing.

N. High Pressure Control

Safety control shall stop unit if high compressor discharge pressure develops.

O. Low Pressure Control

Low pressure control shall Factory set at 30 PSIG, and shall be bypassed for 90 seconds on start-up by the compressor control module.

P. Electric Controls

Internally wired controls shall include the compressor control module(s), high and low pressure controls, blower and compressor motor contactors or starters. The 24-volt control circuit shall include a transformer and low voltage terminal board for external temperature control hookup.

Q. Filters

Unit shall be shipped with 2 inch thick disposable glass fiber media filters to be field mounted in the factory-furnished flat filter rack on the return air opening.

R. OPTIONS

The following options shall be provided with each unit

1. Corrosion Protection

   Corrosion Protection meeting or exceeding 10,000 hr salt spray test conditions per ASTM B117, 1,200 cycles per Kesternich test conditions. Protective coating shall be on the following components.

   a. Evaporator coil
   b. Condenser coil
   c. Cabinet

2. Cabinet Options

   a. Severe indoor atmosphere protection
   b. Corrosive indoor atmosphere protection
   c. 1" Closed cell foam insulation
   d. Double wall construction

3. Refrigerant Circuit Components & Controls

   a. Hot Gas Bypass, lead compressor

4. Motors

   a. High efficiency blower motor
   b. Totally enclosed blower motor

5. Controls

   a. Microprocessor controller

6. Filters

   a. 2- Inch aluminum metal media filters
   b. 2- Inch pleated (30% efficient)
   c. 2- Inch frame with replaceable media

7. Electrical Options

a. Phase/voltage monitor
b. System lockout relay
c. Shut down relay

8. Low Ambient Control

a. Damper assembly shall fit over condenser air discharge and reduce airflow to maintain compressor discharge pressure in low ambient conditions. Low Ambient damper shall be actuated by a motorized damper that activates on condenser coil temperature.

9. Clogged Filter Indicator

a. Dirty or clogged filters shall be red flagged by the indicator when the preset pressure differential across the filters is reached. The indicator shall be manual-reset. It shall include contacts for remote annunciation.

10. Firestat

a. When the return air temperature reaches 135°F, the Firestat turns the unit off. The device is to be field-installed in the return air duct and is manual-reset.

11. Room Thermostats

a. For both single and dual compressor units, wall-mounted room thermostats shall be provided with system switch functions of “Off-Cool- Heat” and fan switch functions of “Auto-On”.

PART 2 EXECUTION

3.1 EXAMINATION

A. Examine areas and conditions, with Installer present, for compliance with requirements for installation tolerances, housekeeping pads, and other conditions affecting performance of units.

B. Do not proceed until unsatisfactory conditions have been corrected.

3.2 INSTALLATION, GENERAL

A. Install units level and plumb, in accordance with manufacturer's written instructions. Support units as described below, using the vibration control devices indicated.

3.3 CONNECTIONS

A. Electrical Connections: The following requirements apply:

1. Electrical power wiring is specified in Division 26.

2. Grounding: Connect unit components to ground in accordance with the National Electrical Code and FAA Standard 019E.

3.4 FIELD QUALITY CONTROL

A. Manufacturer's Field Inspection: Arrange and pay for a factory authorized service representative to perform the following:

1. Inspect the field assembly of components and installation of units including ductwork and electrical connections.

2. Prepare a written report on findings and recommended corrective actions.

3.5 ADJUSTING, CLEANING AND PROTECTING

A. Adjust damper linkages for proper damper operation.

B. Clean unit cabinet interiors to remove foreign material and construction dirt and dust. Vacuum clean fan wheel and cabinet.

3.6 COMMISSIONING

A. Final Checks Before Start Up: Perform the following operations and checks before start up:

1. Remove shipping blocking and bracing.

2. Verify unit is secure on mountings and supporting devices and that connections for electrical are complete. Verify proper thermal overload protection is installed in motors, starters, and disconnects.

3. Perform cleaning and adjusting specified in this Section.

4. Disconnect fan drive from motor and verify proper motor rotation direction and verify fan wheel free rotation and smooth bearings operations. Reconnect fan drive system, align belts, and install belt guards.

5. Lubricate bearings, pulleys, belts, and other moving parts with factory recommended lubricants.

6. Verify automatic dampers are in the full open position.

7. Verify automatic temperature control operation.

B. Starting procedures for units:

1. Arrange and pay for a factory authorized service representative to be present for start up.

2. Energize motor, verify proper operation of motor, drive system, and fan wheel. Adjust fan to indicated RPM.

3. Measure and record motor electrical values for voltage and amperage.

4. Energize motor, verify proper operation of motor, drive system, and fan wheel. Adjust fan to indicated RPM.

C. Shut unit down and ensure connected to automatic temperature control operators.

END OF SECTION 23 80 00

SECTION 26 00 01 - GENERAL PROVISIONS FOR GOVERNMENT FURNISHED EQUIPMENT (GFE)

PART 1 - GENERAL

1.1 SUMMARY

A. Provisions specified in this Section apply to Division 26 Sections noted as Government Furnished Equipment (GFE). Contract drawings are diagrammatic only, and do not give fully dimensioned locations of various elements of work. Determine exact GFE locations from field measurements. Part 1 and Part 3 of Sections identified as GFE are for general product information only, unless noted otherwise. The Contractor shall install GFE equipment as directed in Part 3 of the applicable Sections.

B. Provide the following Electrical Equipment and Systems:

1. Physical placement and securing in place of GFE electrical equipment.
2. Installation and termination of all power and control wiring and associated conduit in accordance with the contract drawings, manufacturer's recommendations, and GFE shop drawings.
3. Special ancillary equipment not included with the product but required for installation shall be provided by the Contractor.

1.2 REFERENCES

A. The publications listed below form a part of this Specification to the extent referenced. The publications listed below are referenced as the latest edition published as of the date of this document. The publications are referred to within the text by the basic designation only.

B. National Fire Protection Association (NFPA)

1. NFPA 70, National Electrical Code.

C. Occupational Safety and Health Administration (OSHA)

1. 29 CFR 1910.7, Definitions and Requirements for a Nationally Recognized Testing Laboratory (NRTL).

D. FAA Orders and Standards:

1. FAA-STD-1217f, Electrical Work, Interior
2. FAA-STD-019e, Lightning and Surge Protection, Grounding, Bonding and Shielding Requirements for Electronic Equipment

1.3 DEFINITIONS

A. Government Furnished Equipment (GFE):

1. Equipment that is specified GFE throughout Division 26, will be furnished and delivered to the site by the Government as originally shipped and packaged by the manufacturer. The Contractor shall unload, handle, store, set in place, and secure electrical equipment identified as GFE. The Contractor shall also install this equipment as specified in the appropriate equipment Section.

1.4 ADDITIONAL REQUIREMENTS

A. The Contracting Officer's Technical Representative shall provide manufacturers' cut sheets and approved shop drawings to the Contractor showing exact dimensions of equipment, installation details, and operations and maintenance data for the GFE. The Contractor shall include this information in the project Operation and Maintenance manual as identified in Section 26 05 00, “Common Work Results for Electrical.” The Contracting Officer's Technical Representative will be responsible for all interfaces with the GFE manufacturers with regard to testing and training of GFE equipment.

1.5 QUALITY ASSURANCE

A. Regulatory Requirements:

1. Perform work to meet or exceed the requirements of all referenced standards indicated in paragraph 1.2 and other applicable statutes, ordinances, codes and regulations of governmental authorities having jurisdiction. Notify the Contracting Officer's Technical Representative of known or probable code violations discovered during contract performance. Do not proceed with the work until violations have been resolved.

B. Manufacturer's Statement:

1. A manufacturer's statement indicating complete compliance with the applicable document is acceptable as proof of compliance.

C. Listing and Labeling Ancillary Equipment:

1. Electrical equipment and materials required to complete the installation of GFE equipment shall be UL-listed and labeled. The terms "Listed and Labeled" as defined in NFPA 70, Article 100. Listing and labeling agency qualifications as defined in 29 CFR 1910.7.

D. Qualifications:

1. Installer shall have successfully completed within the last 3 years at least five projects similar in type and size to this project. The installation shall be accomplished by skilled licensed workmen regularly engaged in this type of work. Names, locations, contacts, and phone numbers of these projects shall be provided with the submittals.

1.6 DELIVERY, STORAGE, AND HANDLING

A. The GFE will be delivered to the Contracting Officer's Technical Representative on site. The Contractor and the Contracting Officer's Technical Representative must jointly inspect the equipment before Contractor acceptance. If equipment is deemed acceptable by both parties, the Contractor shall assume the responsibility of safely storing the equipment. If required by the Contracting Officer's Technical Representative, the Contractor shall furnish and install space heaters or provide desiccant recommended by the equipment manufacturer to prevent condensation. The Contractor shall conduct routine inspections and verify the condition of the stored equipment. The Contractor shall only use factory-installed lifting provisions.

1.7 PROJECT CONDITIONS

A. Verify dimensions by field measurements.

B. Determine suitable path for moving equipment out of storage.

C. Verify clearance requirements and locate equipment considering installation tolerances.

D. Revise locations and elevations from those indicated as required to suite project conditions.

E. Layout and coordinate work in advance and prior to any installation to avoid conflicts or interference with other work. Maintain required clearances around electrical and communications equipment. Establish the exact location of electrical equipment based on the actual field verified dimensions of equipment furnished.

F. Coordinate conduit rough-in locations into equipment with Government provided approved shop drawings and coordinated installation drawings for GFE.

G. Where unknown obstructions are encountered, notify the COTR. Do not alter routing of work until approved by the COTR.

H. Electrical equipment sizes indicated on the drawings are generally based on specified manufacturer.

I. Verify that the GFE proposed will fit in the space indicated on the drawings. Coordinate building dimensions with architectural and structural drawings. Coordinate equipment furnished and installed under other Sections of the Specification with electrical equipment installed under this Section.

J. Maintain clearances around electrical equipment as required by NFPA 70 and all applicable codes. Establish the exact location of electrical equipment based on the actual field verified dimensions of equipment furnished.

K. Ensure that electrical work is coordinated and compatible with work shown on architectural, civil, mechanical and structural drawings.

1.8 COORDINATION

A. Where the electrical drawings indicate (diagrammatically or otherwise), the work intended and the functions to be performed, even though some details are not shown, the Contractor shall furnish all equipment and labor to complete the installation work, and accomplish all the indicated functions of the electrical installation. Further, the Contractor shall be responsible for taking the necessary actions to ensure that all electrical work is coordinated and compatible with architectural, landscape, civil, mechanical, plumbing, and structural drawings.

B. Layout Work from building and property lines and benchmarks provided, verify, and be responsible for the correctness of measurements in connection with Work. Change made to major overall dimensions shown which affect the physical size, shape, or location of any part of the Work, whether due to field check or changes due to the use of equipment of a manufacturer other than that used as a basis of design shall cause no interference with other Work.

C. Examine the Drawings of other trades. Cooperate and coordinate with other trades to insure that the Work can be installed properly as designed and planned without interference with other work or delay. Where interferences may occur and departures from arrangements shown are required, consult with other trades involved. Come to an agreement as to changes, locations, and elevations. Furnish all necessary templates, patterns, measurements, etc., for installation and for the purpose of making adjoining work conform. Furnish setting plans and shop details to other trades as required.

D. Investigate the structural and finish conditions affecting the Work. Offsets, bends or other items required may not be shown due to the small scale of the Drawings; provide such offsets, bends or other items as required to meet structural or finish condition.

E. Coordinate connection of electrical services.

PART 2 - PRODUCTS

2.1 GOVERNMENT FURNISHED EQUIPMENT

A. General:

1. The GFE will be delivered to the Contracting Officer's Technical Representative on site. The Contractor and the Contracting Officer's Technical Representative must jointly inspect the equipment before Contractor acceptance. If equipment is deemed acceptable by both parties, the Contractor shall assume the responsibility of safely storing the equipment. Items identified as GFE are listed in "Appendix A" located in Division 01 11 00 "Summary of Work".

B. Ancillary Electrical Equipment:

1. Provide materials and equipment to install GFE. The Contractor is responsible for delivering a complete, safe, maintainable, supportable and fully functional system.

PART 3 - EXECUTION

3.1 INSTALLATION

A. General:

1. The rules, regulations, and reference documents indicated shall be considered as minimum requirements and shall not relieve the Contractor from furnishing and installing higher grades of materials and workmanship when specified or when required by the contract drawings. Equipment shall be installed in a manner to provide proper working space, access, and space for removal of the equipment as required to suit intended application.

B. Workmanship:

1. Materials and equipment shall be installed in accordance with the contract documents and the recommendations of the manufacturer for conditions and applications shown. The installation shall be accomplished by skilled workmen regularly engaged in this type of work. Where required by local regulations, the workmen shall be properly licensed or certified.

C. Contract Drawings:

1. Where the electrical drawings schematically indicate the work, diagrammatically or otherwise, furnish and install equipment, material, and labor for a complete and proper installation of GFE. Ensure that the electrical work is coordinated and compatible with architectural, civil, mechanical and structural work.

D. Installation Drawings:

1. Install GFE in strict accordance with equipment installation drawings furnished by the Government.

E. Review Other Sections:

1. Review other Sections of Specification to determine electrical requirements for equipment specified under those Sections.

F. Minor Departures:

1. Minor departures from exact dimensions shown in electrical drawings will be permitted where required to avoid conflict and unnecessary difficulty in installation of dimensioned items when other requirements are in compliance. Obtain written approval from the Contracting Officer's Technical Representative prior to implementing departures.

G. Identification of GFE:

1. Comply with Section 26 05 53, “Identification for Electrical Systems,” the contract drawings, and the following instructions. Attach an engraved nameplate using round head chrome plated brass screws, to the front of each piece of GFE identified in Appendix

A. Clearly identify on the nameplate the voltage, phase, and equipment served. Use the full name of the equipment, such as "Switchboard Number 1"; do not abbreviate. Engrave nameplates as indicated up to a maximum of three lines.

H. Seismic Requirements:

1. Contractor shall install all electrical equipment in accordance with applicable seismic zone requirements. Comply with section 26 05 48, "Vibration and Seismic Controls for Electrical Systems".

3.2 REPAIRS AND RESTORATION

A. Repair damage to utilities and other construction caused by installation of GFE and ancillary electrical materials and equipment.

3.3 FIELD QUALITY CONTROL

A. Access to Equipment:

1. Locate GFE to allow easy access during operation, repair and maintenance.

B. Waterproofing:

1. Make equipment and components exposed to the weather watertight and insect proof. Protect equipment and conduit openings with temporary plugs or caps, when work is not in progress and until installation is completed. Restore watertight integrity of waterproof barriers pierced during construction, including roofing and walls.

3.4 TESTING

A. Contractor acceptance testing of GFE will be performed under Section 26 00 02, “Documentation, Testing, and Training Requirements for Government Furnished Equipment (GFE).” Government acceptance testing and demonstration of GFE will be performed by the Government. The Contractor shall have a representative on site during the Government's acceptance testing and demonstration of this equipment to witness the proceedings.

B. Contractor shall include the GFE testing in the overall construction schedule. The Contracting Officer's Technical Representative shall make arrangements for GFE testing by manufacturer's representatives. The Contractor shall notify the Contracting Officer's Technical Representative 21 calendar days in advance to schedule dates.

C. Prior to the Government's acceptance testing of GFE, the Contractor shall perform the following visual inspections:

1. Compare nameplates of equipment and detailed components with single-line diagrams and specified requirements, and report deficiencies and discrepancies to the Contracting Officer's Technical Representative.

2. Check for proper anchorage, required clearances, physical damage, and proper alignment of electrical equipment and components.

3. Inspect equipment for working of movable parts, paint, and dents, scratches, proper fit and missing hardware.

4. Clean interior and exterior of equipment using manufacturer's approved methods and materials.

3.5 CLEANING

A. After completing system installations, including fittings and devices, inspect exposed finishes. Touch up scratches and mars of finish to match original finish. Clean devices internally, using methods and materials recommended by the manufacturer. Remove burrs, dirt and construction debris from the area.

3.6 DEMONSTRATION

A. Procedures and schedules for start-up and shutdown troubleshooting, servicing and preventative maintenance will be directed under Section 26 00 02, "Documentation, Testing, and Training Requirements for Government Furnished Equipment (GFE)."

1. Compare nameplates of equipment and detailed components with single-line diagrams and specified requirements, and report deficiencies and discrepancies to the Contracting Officer's Technical Representative.

3.7 SCHEDULE

A. Schedule A - GFE equipment installation activities (continued on next page).

GOVERNMENT FURNISHED POWER EQUIPMENT TIMETABLE FOR SCHEDULING

UNITERRUPTIBLE POWER SUPPLY **Vendor To Be Determined**

Activity	Duration	Comments
21-Day Notice to Vendor by Contractor (via FAA RE) for UPS Start-up	21 Days	FAA Representative (Vendor technician) inspects Power system equipment installed and functioning Not necessarily tested, but UPS are energize and ready for Start-up (PARTIAL CAI)
UPS Start-up	1 Day	FAA Representative (Vendor technician) Start-up of the UPS. Begin 2 year equipment warranty

END OF SECTION 26 00 01

SECTION 26 00 02 - DOCUMENTATION, TESTING, AND TRAINING REQUIREMENTS FOR GOVERNMENT FURNISHED EQUIPMENT (GFE)

PART 1 - GENERAL

1.1 SUMMARY

A. This Section defines documentation, testing, training, support and supply requirements for Government furnished equipment (GFE). Testing procedures outlined in Part 3 of this Section shall not replace testing listed under other Sections of the Specification for GFE. Testing listed under this Section shall clarify or be performed in addition to testing requirements listed for GFE in other Sections of this Specification as noted herein.

1.2 REFERENCES

A. The publications listed below form a part of this Specification to the extent referenced. The publications listed below are referenced as the latest edition published as of the date of this document. The publications are referred to within the text by the basic designation only.

B. Federal Standards (FS)

1. FAA Order 6980.29a, Maintenance of Static Uninterruptible Power Supply (UPS)
2. FAA Order 6980.25C, Maintenance of Batteries for Standby Power

C. Institute of Electrical and Electronics Engineers (IEEE)

1. IEEE 43, Recommended Practice for Testing Insulation Resistance of Rotating Machines.

D. National Fire Protection Association (NFPA)

1. NFPA 70, National Electrical Code.
2. NFPA 110, Standard for Emergency and Standby Power Systems

E. Occupational and Safety and Health Administration (OSHA)

1. 29 CFR 1910.7, Definitions and Requirements for a Nationally Recognized Testing Laboratory (NRTL).

1.3 DEFINITIONS

A. Government Furnished Equipment (GFE):

1. Equipment that is specified GFE throughout Division 26, will be furnished and delivered to the site by the Government as originally shipped and packaged by the manufacturer. It shall be the responsibility of the Government to unload the GFE and place it inside the shelter. The Contractor shall assist the delivery company to unload, handle, store, set in

place, and secure electrical equipment identified as GFE. The Contractor shall also install this equipment as specified in the appropriate equipment Section.

1.4 SUBMITTALS

A. The following shall be submitted in accordance with Section 01 33 00, "Submittal Procedures:"

1. Manufacturer's Field Reports: Contractor shall submit two complete copies of field testing reports.

2. Operation and Maintenance Data: Each GFE vendor shall submit three complete sets of O&M manuals and detailed training manuals.

1.5 QUALITY ASSURANCE

A. Comply with NFPA 70.

B. Testing Agency's Field Supervision:

1. Person currently certified by the International Electrical Testing Association (NETA) or National Institute for Certification in Engineering Technologies to supervise on-site testing. Testing agency shall have a minimum of 5 years prior experience.

C. Field Testing Agency Qualifications:

1. Independent testing agency shall meet 29 CFR 1910.7 criteria for accreditation of testing laboratories, or shall be a full-member company of NETA.

PART 2 - PRODUCTS

2.1 GENERAL

A. General:

1. Each GFE vendor will submit data (shop drawings, detail drawings, manufacturer's instruction manuals, O&M manuals) to the Contracting Officer's Technical Representative. The Contracting Officer's Technical Representative will perform review and compilation of vendor data and then submit **2** copies to the Contractor for installation of the GFE.

2.2 OPERATION AND MAINTENANCE MANUALS

A. The manuals will detail all aspects of equipment operation and maintenance, including electrical schematics, a written description of the system design, drawings illustrating control logic and equipment location, and technical bulletins describing each item of equipment used in the system. Check lists and procedures for troubleshooting techniques will be included. A list of

names, addresses, and telephone numbers of all service organizations that supply repair parts for the system or systems to be furnished shall also be included.

2.3 DRAWINGS

A. Upon completion of the installation, the Contractor shall deliver two sets of as-built drawings to the Contracting Officer's Technical Representative. The drawings shall be bond drawings sized 24 inches by 36 inches. A set of drawings shall consist of the vendor installation drawing package corrected to show installation changes marked in red non-fading ink. These drawings shall show the final configuration of all wiring and equipment installed at the facility. These as-built drawings shall be verified by the Contracting Officer's Technical Representative on site.

2.4 MANUFACTURER'S INSTRUCTION MANUALS

A. The manufacturer's instruction manual will include at least the following sections:

1. Description of Equipment: Include size, weight, power consumption, power requirements, outline drawing.
2. Installation: Include methods, methodology for installing and interfacing the equipment, installation cautions, interface requirements, and typical installations.
3. Theory of Operation: Include a description of technical operating characteristics and individual equipment's using standard phraseology, descriptions of interface requirements including operating protocols, equipment displays and screens.
4. Operating Instructions: Include information instructions for operating the equipment in all of its modes of operation including interface displays and expected readouts in a self-help, self-teaching format.
5. Maintenance Requirements: Include manufacturer's recommended maintenance requirements and time schedules for accomplishing the maintenance for each part or item which requires maintenance.
6. Illustrated Parts List: Include exploded views of equipment with parts individually numbered and identified with a noun and uniquely numbered and referenced to a list of original equipment manufacturers' names and addresses.
7. Manufacturer Information: Include original manufacturers' names and addresses.
8. Manufacturer's Literature: Include manufacturer's literature on parts/subassemblies that are used within the system essentially unchanged for which the vendor does not have extensive development experience.
9. Drawings and Schematics: Include drawings and schematics for the equipment and may be referenced in previous Sections.
10. Troubleshooting Support Data: Commercial instruction books shall contain all needed data of this type to effect isolation and repair of faulty components. This data includes block diagrams, schematic diagrams, logic diagrams of required levels, functional and signal flows, power and its distribution, and photos or diagrams of cabinets, chassis modules, and printed circuit boards.

2.5 PRODUCT DATA

A. Contractor shall compile GFE data when required into indexed and alphabetized notebook binders. Product data shall include printed information, such as manufacturer's installation instructions, catalog cuts, standard color charts, roughing-in diagrams and templates, standard wiring diagrams, and performance curves. Each copy will be marked to show applicable choices and options. Where printed product data includes information on several products that are not required, copies will be marked to indicate the applicable information. The following information shall be included:

1. Manufacturer's printed recommendations.
2. Compliance with trade association standards.
3. Compliance with recognized testing agency standards.
4. Application of testing agency labels and seals.
5. Notation of dimensions verified by field measurement.
6. Notation of coordination requirements.

2.6 TESTING PROCEDURES MANUAL

A. The Contractor shall develop a Contractor's Master Test Plan as outlined in Part 3 of this Section. This test plan shall be submitted to, and approved by, the Contracting Officer's Technical Representative prior to commencing any field testing of the GFE.

2.7 FIELD TEST REPORTS AND FORMS

A. Test reports shall be typed on field testing agency's preprinted tabular forms. Forms shall include formulas used in calculating values shown. Test reports shall document all discrepancies found during inspection and testing of equipment. The Contracting Officer's Technical Representative shall coordinate corrective action of discrepancies found with Contractor and GFE vendor.

PART 3 - EXECUTION

3.1 FACTORY TESTING

A. GFE vendors shall perform factory tests on GFE. The Contractor shall submit three copies of factory test reports to the Contracting Officer's Technical Representative for each tested piece of equipment.

B. A Contractor’s representative shall be present for all factory testing. The COTR shall provide one (1) copy of factory test reports to the contractor. The Contractor shall compile a consolidated set the test reports for each GFE equipment for inclusion with submission for the contractor acceptance inspection requirements indicated in Part 3.5 of this section.

3.2 FIELD TESTING

A. Visual and Mechanical Inspection:

1. Compare equipment nameplate information with drawings and specification.
2. Inspect physical, electrical, and mechanical condition.
3. Check for correct anchorage, required area clearances, and correct alignment.
4. Verify that fuse sizes and types correspond to drawings.
5. Test all electrical and mechanical interlock systems for correct operating and sequencing.

B. UPS System Static Bypass Switch Testing:

1. The Contractor shall perform electrical tests for UPS system static bypass switches as follows:
   a. Perform insulation-resistance tests, phase-to-phase and phase-to-ground, with switch in both source positions.
   b. Verify settings and operation of control devices.
   c. Perform automatic transfer tests to simulate loss of normal power; return to normal power; loss of emergency power; and all forms of single-phase conditions.

C. Correct Operation and Timing:

1. Verify correct operating and timing of the following functions:
   a. Normal source voltage-sensing relays.
   b. Time delay upon transfer.
   c. Alternate source voltage-sensing relays.
   d. Automatic transfer operation.
   e. Interlocks and limit switch function.
   f. Time delays and re-transfer upon normal power restoration.

D. UPS System Batteries Testing:

1. The Contractor shall perform electrical tests for UPS system batteries as follows:
   a. Set charger float and equalizing voltage levels.
   b. Verify all charger functions and alarms.
   c. Measure each cell voltage and total battery voltage with charger energized and in float mode of operation.
   d. Measure intercell connection resistance.
   e. Perform cell impedance test.
   f. Perform a capacity load test in accordance with manufacturer's specifications and ANSI/IEEE standards.

3.3 TEST RESULTS

A. Circuit Breakers:

1. Circuit breaker test results shall conform to the following:

   a. Bolt-torque levels shall be in accordance with the manufacturer.

   b. Compare microhm or millivolt drop values to adjacent poles and similar breakers. Investigate deviations of more than 25 percent. Investigate any value exceeding manufacturer's recommendations.

   c. Insulation resistance shall not be less than 100 megohms.

   d. Trip characteristic of breakers shall fall within manufacturer's published time-current characteristic tolerance bank, including adjustment factors.

   e. Ratings and settings shall comply with the results and requirements of the short circuit and circuit breaker coordination studies performed for this project.

B. Manual Bypass Panel:

1. Static bypass switch test results shall conform to the following:

   a. Bolt-torque levels shall be in accordance with the manufacturer.

   b. Insulation-resistance test voltages and minimum values shall be in accordance with Table A.10.

   c. Compare microhm values to adjacent poles and similar switches. Investigate deviations of more than 25 percent.

   d. Verify all safety interlocks for correct operating and sequencing.

C. UPS Battery:

1. UPS battery test results shall conform to the following:

   a. Bolt-torque levels shall be in accordance with manufacturer's published data.

   b. Specific gravity shall be in accordance with manufacturer's recommended values.

   c. Electrolyte level shall be within normal limits.

   d. Cell voltages shall be within 0.05 volt of each other or in accordance with manufacturer's published data.

   e. Intercell resistance shall not vary by more than 25 percent for similar connections.

   f. Cell impedance or conductance values shall not vary by more than 25 percent for identical cells that are in a fully charged state.

3.4 PACKAGED ENGINE GENERATOR SYSTEM

A. Tests listed shall clarify and be in addition to those specified in Section 26 00 02, Part 3.

B. Electrical and Mechanical Tests:

1. Perform phase-rotation test to determine compatibility with load requirements.
2. Conduct performance test in accordance with NFPA 110, Section 5-13 (Installation Acceptance).

C. Test Values:

1. Polarization index values shall be in accordance with IEEE 43.
2. Performance tests shall conform to manufacturer's published data.

D. Verify operation of automatic transfer switches in accordance with the manufacturers written instructions.

1. Perform automatic transfer tests:
   a. Simulate loss of normal power.
   b. Return to normal power.
   c. Simulate loss of emergency power.
   d. Simulate all forms of single-phase conditions.

2. Verify correct operation and timing of the following functions:
   a. Normal source voltage-sensing relays.
   b. Time delay upon transfer.
   c. Alternate source voltage-sensing relays.
   d. Automatic transfer operation.
   e. Time delay and retransfer upon normal power restoration

3.5 CONTRACTOR ACCEPTANCE INSPECTION (CAI)

A. Upon completion of the installation and certification from the Contractor that the installation is complete in every respect, the Contractor shall coordinate the with the COTR for the GFE vendor to perform all startup and testing on the GFE. This inspection shall include inspecting each equipment installation for proper mechanical and electrical installation, exercising the system in all possible modes of operation, checking and calibrating each system point, printing and displaying each system point, entering and deleting new points, and using any password systems. These tests shall be conducted in the presence of FAA representative, who shall conditionally accept the system installation. Any training provided by the GFE vendor shall be conducted prior to CAI. System performance testing will be performed by FAA in conjunction with CAI.

3.6 JOINT ACCEPTANCE INSPECTION (JAI)

A. The Contractor and the Government each will provide one or more GFE system specialist/engineers who will be available to answer questions and resolve difficulties during FAA system JAI.

3.7 TEST PLANS

A. The Contractor shall submit a Contractor's Master Test Plan. This document shall define the overall test philosophy and summarize all tests to be conducted. It shall describe methods for

implementing and controlling the testing programs. The Master Test Plan shall require test performance reports to document the results of all tests. All test plans shall be reviewed by the COTR before any testing can occur. Therefore, a test plan that describes the methods to be used for each system test shall be submitted at least 21 days before the scheduled test date. Include a step-by-step description of the tests, and indicate type and location of test apparatus to be employed. Demonstrate that the operation and installation requirements specified have been met.

3.8 TEST PROCEDURES

A. A separate test procedure shall be prepared for each test run to be conducted by the Contractor as identified in the Contractor's Master Test Plan. Test procedure shall include the detailed procedures and background information required for the conduct of a specified test run. The test procedures shall include the following:

1. Title page,
2. Location and schedule,
3. References,
4. Personnel and responsibilities,
5. Equipment and computer program requirements,
6. Test Operating Procedures,
7. Detailed test descriptions,
8. Detailed test verification,
9. Recording and reduction requirements, and
10. Data reduction and analysis procedures.

3.9 TEST PERFORMANCE

A. Test performance reports document the results of a test. They are used to identify and evaluate discrepancies between expect and actual test results. The test report shall contain the following:

1. Identification of the specific test,
2. Purpose of the test,
3. Specific test objective,
4. References to applicable test plan and procedure,
5. Description of the test article,
6. List of all test equipment,
7. Description of the criteria used,
8. Summary of test results,
9. Detailed test results,
10. Test evaluation, and

11. Certification that the test results are authentic, accurate, current, and in accordance with related requirements and test plans.

3.10 TRAINING

A. The Contractor has no responsibility for personnel training for Government furnished equipment.

3.11 SUPPORT AND SUPPLIES

A. Contractor's request for information (RFI) as it relates to installation and wiring of GFE shall be submitted to the COTR for resolution.

END OF SECTION 26 00 02

SECTION 26 05 00 - COMMON WORK RESULTS FOR ELECTRICAL

PART 1 - GENERAL

1.1 SUMMARY

A. General:

1. The general electrical requirements in this section are applicable to both Government Furnished Equipment (GFE) and non-GFE. Materials and equipment shall comply with all requirements of the contract documents. Materials furnished by the Contractor shall be new, the standard products of manufacturers regularly engaged in the production of such materials, and of the manufacturer's latest designs that comply with the specification requirements. If material and equipment requirements conflict, the order of precedence for selection shall be as follows: special contract provision, this specification, the contract drawings; and then in continuing order of precedence, military specifications, federal specifications, NFPA publications, IEEE standards, UL standards and NEMA standards. Wherever standards have been established by Underwriters Laboratories, Inc., the material shall bear the UL label.

1.2 REFERENCES:

A. FAA Orders and Standards:
1. FAA-STD-1217f, Electrical Work, Interior
2. FAA-STD-1391B Installation and Splicing of Underground Cables
3. FAA-STD-019e, Lightning and Surge Protection, Grounding, Bonding and Shielding Requirements for Electronic Equipment

B. National Fire Protection Association (NFPA)
1. NFPA 70, National Electrical Code.
2. NFPA 110 Standard for Emergency and Standby Power Systems

C. Institute of Electrical and Electronic Engineers (IEEE)
1. IEEE C2 National Electrical Safety Code
2. IEEE Std 100 Dictionary of Electrical and Electronics Terms

D. National Electrical Manufacures Association (NEMA)
1. NEMA C57.12.28 Pad-Mounted Equipment - Enclosure Integrity
2. NEMA ICS 6 Industrial Control and Systems Enclosures
3. NEMA MG 1 Motors and Generators
4. NEMA MG 10 Energy Management Guide for Selection and Use of Fixed Frequency Medium AC Squirrel-Cage Polyphase Induction Motors
5. NEMA MG 11 Energy Management Guide for Selection and Use of Single-Phase Motors

1.3 ELECTRICAL CHARACTERISTICS

A. Provide the following electrical equipment and systems:

1. Equipment, wiring devices and electrical connections required for installation of electrical equipment.
2. Raceways and wiring for power and controls.
3. Grounding systems.
4. Cutting and patching for electrical construction.
5. Seismic bracing.

B. Product Requirements:

1. Provide products which conform to and installation that complies with the requirements of Uniform Federal Accessibility Standards (UFAS).

C. Spacing Requirements:

1. Electrical equipment sizes indicated on the drawings are generally based on specified manufacturer. Verify that the equipment proposed will fit in the space indicated on the drawings. Coordinate building dimensions with architectural and structural drawings. Equipment furnished and installed under other Sections of this Specification shall be coordinated with the requirements of this Section. Maintain clearances required by NFPA 70 around electrical equipment. Establish the exact location of electrical equipment based on the actual field verified dimensions of equipment furnished.

D. Departure from Dimensions Shown:

1. Minor departures from exact dimensions shown in electrical plans may be permitted when required to avoid conflict or unnecessary difficulty in placement of a dimensioned item, provided all contract requirements are met. The Contractor shall promptly obtain written approval from the Contracting Officer's Technical Representative prior to undertaking any such departures and shall provide appropriate documentation of the departure.

1.4 SUBMITTALS

A. Product Data: For each type of product specified.

B. Samples: When the adequacy, quality and safety of a material will be better demonstrated and it will expedite approval, provide single samples of items proposed for use. Conform to the procedures specified. Submit samples of color, lettering style, and other graphic representation required for each identification product for the project.

C. Test Reports:

1. Operating Tests:

a. An interim operating and performance test shall be performed for each major equipment item after installation is complete and before the item is placed in

service. After systems have been completely installed and balanced, test each system for proper operation. Tests shall be conducted in the presence of the COTR under design conditions to ensure proper sequence and operation throughout the range of operation. Make adjustments as required to ensure proper functioning of the systems. Special tests on individual systems are specified under individual sections. Tests shall be scheduled and approved in writing by the Contracting Officer's Technical Representative at least 21 calendar days prior to conducting tests. Contractor shall demonstrate, to the Contracting Officer's Technical Representative's satisfaction, proper operation of control devices by simulating actual operating conditions. Devices tested shall include, but not be limited to, UPS, conductors, and system interlocks and alarms. Operating tests for GFE will be performed by the GFE vendors at the Government's expense. Contractor shall have a representative on site to witness all GFE tests.

b. Submit a summary of the Electrical Test Report, noting deviations from requirements listed below:

1) Maximum plus or minus 5 percent variation between nominal system voltage and no load voltage.
2) Variation between average phase current and measured individual phase currents does not exceed the manufacturer's specified limits.
3) Maximum plus or minus 10 percent variation between average phase current and measured individual phase currents at Panel MDPC.

D. Operation and Maintenance Data:

1. Provide three copies of operating and maintenance instructions, equipment service manuals, catalog cuts and illustration as described in this section. The operations and maintenance (O&M) data shall be placed in suitable binders for use by maintenance personnel. The material shall include equipment model and serial numbers, performance characteristics, power and utility requirements and manufacturer's recommended maintenance schedules. Final acceptance of this equipment is contingent upon submission of required documents to and approval by the Contracting Officer's Technical Representative prior to the facility turnover.

1.5 QUALITY ASSURANCE

A. Comply with NFPA 70 and FAA-C-1217f for components and installation. In case of conflict between provisions of codes, laws and ordinances, the more stringent requirement shall apply.

B. Material and Equipment Qualifications: Provide materials and equipment that are products of manufacturers regularly engaged in the production of such products which are of equal material, design and workmanship. Products shall have been in satisfactory commercial or industrial use for 2 years prior to bid opening. The 2-year period shall include applications of equipment and materials under similar circumstances and of similar size. The product shall have been on sale on the commercial market through advertisements, manufacturers' catalogs, or brochures during the 2-year period. Where two or more items of the same class of equipment are required, these items shall be products of a single manufacturer; however, the component parts of the item need not be the products of the same manufacturer unless stated in the technical section.

C. Listing and Labeling:

1. Provide products specified in the Section that are listed and labeled. The terms "listed and labeled" as defined in the National Electrical Code, Article 100. Listing and labeling agency qualifications: NRTL as defined in 29 CFR 1910.7.

D. Equipment Training (Non-GFE):

1. After final tests and adjustments have been completed, fully instruct the Contracting Officer's Technical Representative and other personnel, as directed by the Contracting Officer's Technical Representative in details of operation and maintenance of special equipment, including control system as installed. Submit outline of proposed instruction course 21 days prior to start for approval by the Contracting Officer's Technical Representative.

E. Project Record Documents

1. Maintain at the job site a separate set of white prints of the contract documents for the purpose of recording the system and dimension changes of those portions of work in which actual construction is at variance with the contract documents. The Contractor shall record changes for both GFE and Contractor provided equipment. Upon acceptance of the project, submit documents to the Contracting Officer's Technical Representative, with verification of data accuracy. Mark the drawings with colored pencil. Prepare the drawings as the work progresses. Upon completion of work submit drawings clearly indicating the following:

a. Locations of devices, conduits, equipment and other pertinent items. Indicate the depth of buried ducts and direct burial cable.

b. Schematic and interconnection wiring diagrams of the completed power and control system incorporating the data derived from the equipment shop drawings and the cable and conduit schedule. The drawings shall be detailed to wire and terminal block numbers, conductor color coding, device designations locations and reflect identifications established at the site.

c. Cable and conduit schedule for cables and conduits actually installed; include the type, size, origin, destination, and approximate length for each cable and conduit. Indicate for each cable the voltage rating, number of conductors, cable number, color coding and routing.

F. Material and Equipment Manufacturing Date: Products manufactured more than 3 years prior to date of delivery to site shall not be used, unless specified otherwise.

1.6 POSTED OPERATING INSTRUCTIONS

A. Provide for each system and principal item of equipment as specified in the technical sections for use by operation and maintenance personnel. The operating instructions shall include the following:

1. Wiring diagrams, control diagrams, and control sequence for each principal system and item of equipment.
2. Start up, proper adjustment, operating, lubrication, and shutdown procedures.

3. Safety precautions.
4. The procedure in the event of equipment failure.
5. Other items of instruction as recommended by the manufacturer of each system or item of equipment.

B. Print or engrave operating instructions and frame under glass or in approved laminated plastic. Post instructions where directed. For operating instructions exposed to the weather, provide weather-resistant materials or weatherproof enclosures. Operating instructions shall not fade when exposed to sunlight and shall be secured to prevent easy removal or peeling.

1.7 DELIVERY, STORAGE AND HANDLING

A. Contractor provided equipment shall be protected from damage and stored in a dry location from the time of site delivery. Furnish and energize space heaters or provide desiccant recommended by the equipment manufacturer to prevent condensation. Conduct routine inspections of stored equipment to check equipment condition.

1.8 SEQUENCING AND SCHEDULING

A. Coordinate electrical equipment installation with other building components.

1. Arrange for chases, slots and openings in building structure during progress of construction to allow for electrical installations.
2. Coordinate installing required supporting devices and set sleeves in poured-in-place concrete and other structural components as they are constructed.
3. Sequence, coordinate, and integrate installing electrical materials and equipment for efficient flow of the work.
4. Coordinate connecting electrical service to components furnished under other Sections.
5. Coordinate connecting electrical systems with exterior underground and overhead utilities and services. Comply with requirements of governing regulations, franchised service companies, and controlling agencies.
6. Coordinate installing electrical identification after completion of finishing where identification is applied to field-finished surfaces.

B. Interruption of Power:

1. Contractor is advised that the project site is located at a fully operational airport. Unscheduled power interruptions to any of the electrical distribution systems is not allowed. Work requiring a temporary or permanent de-energizing of the electrical service shall be scheduled and approved in writing by the Contracting Officer's Technical Representative at least 14 calendar days in advance of performance of the work. Work may not commence until written authorization is received from the Contracting Officer's Technical Representative.

PART 2 - PRODUCTS

2.1 SUPPORTING DEVICES

A. Channel and angle supports, raceway supports, sleeves and fasteners shall be as specified in Section 26 05 29, “Hangers and Supports for Electrical Systems.”

2.2 ELECTRICAL IDENTIFICATION

A. Provide electrical identification as specified in Section 26 05 53, “Identification for Electrical Systems.” Manufacturer's standard products to use colors prescribed by ANSI A13.1 and NFPA 70.

B. Manufacturer's Nameplate: Each item of equipment shall have a nameplate bearing the manufacturer's name, address, model number, and serial number securely affixed in a conspicuous place; the nameplate of the distributing agent will not be acceptable.

PART 3 - EXECUTION

3.1 EQUIPMENT INSTALLATION REQUIREMENTS

A. Comply with NECA 1.

B. All materials and equipment shall be installed in accordance with the contract drawings. Where manufacturer's recommended installation methods conflict with the contract requirements, difference shall be resolved by the Contracting Officer's Technical Representative. The installation shall be accomplished by skilled workers regularly engaged in this type of work. Where required by local regulation, the workers shall be properly licensed. Install components and equipment to provide the maximum possible headroom where mounting heights or other location criteria are not indicated. Install items level, plumb, and parallel and perpendicular to other building systems and components, except where otherwise indicated. Install equipment to facilitate service, maintenance and repair or replacement of components. Connect for ease of disconnecting, with minimum interference with other installations. Give right of way to raceways and piping systems installed at a required slope.

3.2 EXCAVATION FOR ELECTRICAL WORK

A. All excavations shall comply with OSHA requirements. Shore and brace as required for stability of excavation.

B. Shoring and Bracing:

1. Establish requirements for trench shoring and bracing to comply with local codes and authorities. Maintain shoring and bracing in excavations regardless of time period excavations will be open. Remove shoring and bracing when no longer required. Where

sheeting is allowed to remain, cut top of sheeting at an elevation of 30 inches below finished grade elevation.

C. Trenching:

1. Excavate trenches for electrical installations as follows:

   a. Excavate trenches to the uniform width, sufficiently wide to provide ample working room and a minimum of 6 to 9 inches clearance on both sides of raceways and equipment.

   b. Excavate trenches to depth indicated or required.

   c. Limit the length of open trench to that in which installations can be made and the trench backfilled within the same day.

   d. Where rock is encountered, carry excavation below required elevation and backfill with a layer of crushed stone or gravel prior to installation of raceways and equipment. Provide a minimum of 6 inches of stone or gravel cushion between rock bearing surface and electrical installations. The bedding material shall contain no particles that would be retained in a 1/4-inch sieve. Tamp the bedding material until firm.

D. Backfilling and Filling:

1. Place soil materials in layers to subgrade elevations for each area classification listed below, using materials specified in Part 2 of this Section. Backfill excavations as promptly as work permits, but not until completion of inspection, testing, approval, and locations of underground utilities have been recorded; concrete formwork has been removed; shoring and bracing has been removed; voids have been backfilled; and trash and debris has been removed.

   a. Under walks and pavements, use a combination of sub-base materials and excavated or borrowed materials.

   b. Under building slabs, use drainage fill materials.

   c. Under piping and equipment, use sub-base materials where required over rock bearing surface and for correction of unauthorized excavation.

   d. Other areas, use excavated or borrowed materials.

E. Placement and Compaction:

1. Place backfill and fill materials in layers of not more than 8 inches in loose depth for material compacted by heavy equipment and not more than 4 inches in loose depth for material compacted by hand-operated tampers.

F. Before Compaction:

1. Moisten or aerate each layer as necessary to provide optimum moisture content. Compact each layer to required percentage of maximum dry density or relative dry density for each area classification specified. Do not place backfill or material on surfaces that are muddy, frozen, or contain frost or ice.

G. Backfill Placement:

1. Place backfill and fill materials evenly adjacent to structures, piping and equipment to required elevations. Prevent displacement of raceways and equipment by carrying material uniformly around them to approximately the same elevation in each lift.

H. Compaction:

1. Control soil compaction during construction, providing minimum percentage of density specified for each area classification indicated.

I. Percentage of Maximum Density Requirements:

1. Compact soil to not less than the following percentages of maximum density for soils which exhibit a well-defined moisture-density relationship (cohesive soils), determined in accordance with ASTM D 1557 and not less than the following percentages of relative density for soils which will not exhibit a well-defined moisture-density relationship (cohesion less soils).

   a. For areas under structures, building slabs and steps, and pavements compact top 12 inches of sub-grade and each layer of backfill or fill material to 90 percent maximum density for cohesive material or 95 percent relative density for cohesion less material.

   b. For areas under walkways compact top 6 inches of sub-grade and each layer of backfill or fill material to 90 percent maximum density for cohesive material or 95 percent relative density for cohesion less material.

   c. For other areas compact top 6 inches of sub-grade and each layer of backfill or fill material to 85 percent maximum density for cohesive soils and 90 percent relative density for cohesion less soils.

3.3 INSTALLATION

A. The rules, regulations, and reference documents indicated shall be considered as minimum requirements and shall not relieve the Contractor from furnishing and installing higher grades of materials and workmanship than are specified or when required by the contract drawings. Equipment shall be installed in a manner to provide proper working space, access, and space for removal of the equipment to suit intended application.

B. Contract Drawings:

1. Where the drawings schematically indicate the work, diagrammatically or otherwise, furnish and install equipment, material and labor for a complete and proper installation. Ensure that electrical and communications work is coordinated and compatible with Architectural, Mechanical, Structural, and Civil work.

C. Fastening:

1. Unless otherwise indicated, securely fasten electrical items and their supporting hardware to the building structure in accordance with Section 26 05 29, “Hangers and Supports for Electrical Systems.”

D. Identification Devices:

1. Install identification devices where required in accordance with the requirements of Section 26 05 53, "Identification for Electrical Systems."

E. Wiring Methods:

1. All wiring shall consist of insulated copper conductors installed in metallic raceways, unless otherwise specified.

F. Conductor Routing:

1. Panelboards, surge arresters, disconnect switches, etc., shall not be used as a raceway for conductor routing other than conductors that originate or terminate in these enclosures. Isolated ground conductors will be allowed to traverse these enclosures.

G. Conductor Separation:

1. Power conductors shall be routed separately from all other conductor types. Route power conductors and other conductors in separate raceways, or by a metallic divider between the power conductors and the other conductors in the same raceway. 480Y/277V power cables shall be in separate raceways from 208Y/120V power cables.

H. Neutral Conductor:

1. Shared/common neutrals shall not be permitted (i.e., each overcurrent device shall have its own separate neutral conductor). Neutral conductor sizes shall not be less than the respective feeder or phase conductor sizes.

I. Ground Conductor:

1. Shared/common grounding conductors shall not be permitted (i.e., each overcurrent protective device shall have its own separate ground conductor). The equipment grounding conductor shall be installed in the same conduit as its related branch and feeder conductors and shall be connected to the ground bus in the branch or distribution panelboard. Equipment ground conductor shall be the same size as the phase conductors were indicated for special equipment branch or feeder circuits that require parity sized ground conductors to comply with equipment manufacturer's recommendations.

J. Cable Terminations:

1. Provide terminations in accordance with this Section and manufacturer's requirements. All splices (including those in the building) must be approved by the Contracting Officer's Technical Representative.

3.4 DEMOLITION

A. Protect existing electrical equipment and installations when performing new work. If damaged or disturbed in the course of the work, remove damaged portions and install new products of equal capacity, quality, and functionality. Remove demolished material from the project site.

Remove, store, clean, re-install, reconnect, and make operational components indicated for relocation.

B. Accessible Work:

1. Remove exposed electrical equipment and installations, indicated to be demolished, in their entirety.

C. Abandoned Work:

1. Cut and remove buried raceway and wiring, indicated to be abandoned in place, 2 inches below the surface of adjacent construction. Cap raceways and patch surface to match existing finish. All wire not removed shall have the Contracting Officer's Technical Representative's written approval.

3.5 CUTTING AND PATCHING

A. Cut, channel, chase, and drill floors, walls, partitions, ceilings, and other surfaces necessary for electrical installations. Perform cutting by skilled mechanics of the trades involved. Repair disturbed surfaces to match adjacent undisturbed surfaces.

3.6 FIELD TESTING

A. Perform the tests specified and other tests necessary to establish the adequacy, quality, safety, completed status, and suitable operation of each system. Repair or replace equipment that does not meet test requirements and retest. Tests shall be scheduled and approved in writing by COTR at least 21 calendar days prior to conducting tests. Unless otherwise indicated, the Contractor shall furnish all test instruments, materials, and labor necessary to perform tests designated in Division 26 Sections. All tests shall be performed in the presence of the Contracting Officer's Technical Representative. All instruments shall have been calibrated within a period of 1 year preceding testing. Calibrations shall be traceable to applicable industry recognized standards.

B. Interim Operating and Performance Test:

1. Perform for each major equipment item after installation is complete and before the item is placed in service. After mechanical systems have been completely installed and balanced, test each system for proper operation. Tests shall be conducted in the presence of the Contracting Officer's Technical Representative under design conditions to ensure proper sequence of operation throughout the range of operation. Make adjustments as required to ensure proper functioning of the systems. Special tests on individual systems are specified under individual Sections. Provide 21 days written notice to the Contracting Officer's Technical Representative for major tests. Contractor shall demonstrate, to the Contracting Officer's Technical Representative's satisfaction, proper operation of control devices by simulating actual operating conditions. Devices tested shall include, but not be limited to, flow and pressure controls, temperature controls, and system interlocks and alarms.

C. Operation and Maintenance of Equipment:

1. After final tests and adjustments have been completed, fully instruct the Contracting Officer's Technical Representative and other personnel as directed by the Contracting Officer's Technical Representative in details of operation and maintenance of electrical equipment, including control systems as installed.

D. Electrical Test Report:

1. Complete the Electrical Test Report included as Attachment No. 1 of this division. Provide the requested information for each panelboard and its power supply conductors. Perform insulation resistance tests in compliance with Section 26 05 19, "Low-Voltage Electrical Power Conductors and Cables" on wires including the neutral before connection to source and to loads. Perform the tests specified and other tests necessary to establish the adequacy, quality, safety, completed status, and suitable operation of each system. Repair or replace equipment that does not meet test requirements and retest. Notify the Contracting Officer's Technical Representative in writing 21 days prior to conducting tests.

E. Electrical Main Supply and Distribution Feeders:

1. All electrical main supply and distribution feeders originating from switchboards, distribution panelboards, panelboards, motor control centers, or transformers, and all electrical feeders to 3-phase electrical squirrel cage, induction motor, 1/2-horsepower (HP) and larger, shall be tested for open/short circuits. Submit the Electrical Test Report included as Attachment No.1.

F. Other Tests:

1. All insulation resistance test, meggering, continuity tests, open and short circuiting testing that fail to meet the minimum standards as set forth in these electrical specifications shall have their feeder or branch circuit conductors (phase conductor, neutral and ground) removed and replaced. If after retesting, these feeder conductors fail to meet minimum requirements, the work shall be re-performed until such work and retesting passes the minimum design parameter requirements as set forth in these electrical specifications.

G. Circuit Breaker Tests:

1. No 120 volt, single pole (1P) 15-100 amp, or any 277 volt, single pole (1P), 15-150 amp, molded case circuit breaker is required to be tested. All two pole (2P) and all three pole (3P), molded case, insulated case and draw out power circuit breakers in both 208 volt and 480 volt ratings shall be tested for short circuit armature operation and for long term thermal overload protection operation to ascertain that they conform to within the manufacturer's recommended tolerances and design parameters. They shall be tested trip free of the handle operation, trip resetting and mechanical freedom of movement. The circuit breakers shall have factory recommended electrical insulation resistance and factory recommended electrical conductivity path resistance.

ATTACHMENT NO. 1

Electrical Test Report
Project Name
Sheet No. _____ of _____
Date

Project No. _____ Address
_____

SERVICE TRANSFORMER SIZE			
NL SERVICE VOLTAGE			
FL SERVICE VOLTAGE			
PANEL OR SWBD SERVED FROM			
PANEL OR SWITCHBOARD			
LOCATION			
MANUFACTURER			
TYPE			
FEEDER OC PROTECTION			
FEEDER CONDUCTOR SIZE			
GROUND CONDUCTOR SIZE			

MEASURED CONDITIONS	PHASE			PHASE			PHASE		
	A	B	C	A	B	C	A	B	C
NO LOAD FEEDER VOLTAGE									
OPERATING LOAD FEEDER VOLTAGE									
OPERATING LOAD FEEDER CURRENT									
CONDUCTOR INSUL RESISTANCE Ø AB									
CONDUCTOR INSUL RESISTANCE Ø BC									
CONDUCTOR INSUL RESISTANCE Ø CA									
CONDUCTOR INSUL RESISTANCE TO GROUND									
NEUTRAL INSUL RES TO GR W/GR CONN REMOVED									

END OF SECTION 26 05 00

SECTION 26 05 19 - LOW-VOLTAGE ELECTRICAL POWER CONDUCTORS AND CABLES

PART 1 - GENERAL

1.1 SUMMARY

A. This Section includes building wires and cables and associated splices, connectors, and terminations for wiring systems rated volts and less.

1.2 REFERENCE STANDARDS

A. The publications listed below form a part of this Specification to the extent referenced. The publications listed below are referenced as the latest edition published as of the date of this document. The publications are referred to within the text by the basic designation only.

B. Federal Specifications (FS)

1. FS QQ-W-343 Wire, Electrical, Copper (Uninsulated), with Notice 1
2. FS W-S-610 Splice Connectors
3. FAA-STD-1217f,

C. National Fire Protection Association (NFPA)

1. NFPA 70 National Electrical Code

D. National Electrical Manufacturers Association (NEMA)

1. NEMA WC3 Rubber Insulated Wire and Cable for the Transmission and Distribution of Electrical Energy
2. NEMA WC70 Non-Shielded Power Cable 2000 V or Less

E. Underwriters Laboratories (UL)

1. UL 486A Wire Connectors and Soldering Lugs for Use with Copper Conductors
2. UL 486C Standard for Splicing Wire Connectors
3. UL 486E Standard for Equipment Wiring Terminals for Use with Aluminum and/or Copper Conductors

F. American Society for Testing and Materials (ASTM)

1. ASTM B 8 Standard Specification for Concentric-Lay-Stranded Copper Conductors, Hard, Medium-Hard, or Soft
2. ASTM D 1000 Standard Test Method for Pressure-Sensitive Adhesive-Coated Tapes used for electrical and electronic applications.

G. International Electrical Testing Association (NETA)

1. NETA ATS Acceptance Testing Specifications for Electric Power Distribution Equipment and Systems

H. National Electrical Contractors Association

1. NECA Standard of Installation

1.3 SUBMITTALS

A. The following shall be submitted in accordance with Section 01 33 00, “Submittal Procedures.”

B. Test Reports: Field test reports indicating and interpreting test results relative to compliance with performance requirements of testing standard.

1.4 QUALITY ASSURANCE

A. Contractor shall test all material GFE or non-GFE as specified in Division 26 00 02 "Documentation, Testing, and Training Requirements" and 26 05 00 "Common Work Results".

B. Components and Installation: Comply with NFPA 70, for components and installation.

C. Listed and Labeled: Provide products specified in this Section that are listed and labeled. The terms "Listed" and "Labeled" as defined in NFPA 70, Article 100.

D. Listing and Labeling Agency Qualifications: A NRTL as defined in 29 CFR 1910.7.

E. Installer Qualifications: Cable splices shall be performed by experienced and qualified cable splices. The workman shall be licensed if required by the authority having jurisdiction.

1.5 SEQUENCING AND SCHEDULING

A. Coordinate layout and installation of cable with other installations. Revise locations and elevations form those indicated as required to suit field conditions and as approved by the Contracting Officer's Technical Representative.

PART 2 - PRODUCTS

2.1 BUILDING WIRES AND CABLES

A. Specified Applications: UL-listed building wires and cables with conductor material, insulation type, cable construction, and rating as specified in PART 3.

B. UPS Power Conductors: Shall be 90°C rated, THWN-2 or approved equal. 75°C rated conductors will void the UL and CSA listing. Refer to the manufacturer's installation manual for further instructions regarding conductor size and type.

C. Rubber Insulation: Conform to NEMA WC3.

D. Thermoplastic Insulation: Conform to NEMA WC70, NEMA WC71,and NEMA WC74.

E. Stranded Conductors: Solid conductor for 10 AWG and smaller; stranded conductor for larger than 10 AWG. Stranded conductors rating shall be tin coated, ASTM B 8, Class B.

F. Wire and Conduit Sizes: All wire and conduit sizes are based on copper insulated conductors with 75 degrees C temperature rating and ambient temperature of 30 degrees C.

G. Sizes: Minimum 12 AWG. Minimum 10 AWG for 120 volt circuits where circuit length (one way) exceeds 75 feet from source, and 10 AWG for 277 volt circuits where circuit length (one way) exceeds 150 feet from source. Communication systems wiring size shall be in accordance with manufacturer's requirements. Fire alarm and control systems wiring size shall be in accordance with manufacturer's requirements.

1. Stranded conductors may be used with wire compression connectors or a pressure washer type lug.
2. Stranded conductors smaller than 10 AWG are allowed in applications where vibration and flexing may be encountered.
3. Soft drawn, annealed copper (aluminum conductors are not acceptable).
4. Power conductors shall be single conductor type.
5. Control interconnection between equipment shall be jacketed type multiconductor.
6. Instrumentation conductor shall be twisted pair, shielded, jacketed type.
7. Conductors used for lighting and receptacle branch circuits shall be single conductor type.

H. Conductor Color Codes: Refer to Section 26 05 53, “Identification for Electrical Systems” for conductors No. 4 AWG and larger, where factory color-coding is not available. Feeder conductors to panels and three phase circuits shall be factory color coded as follows:

1. 208/120 (240) Volt System:
   a. Phase A: Black
   b. Phase B: Red
   c. Phase C: Blue
   d. Neutral: White
   e. Ground: Green

2. 480/277 Volt System:
   a. Phase A: Yellow
   b. Phase B: Brown
   c. Phase C: Orange
   d. Neutral: Gray
   e. Ground: Green

3. Single-phase branch circuits shall be factory color coded as stated above, or identified in accordance with Section 26 05 53, “Identification for Electrical Systems.”

4. Control cables shall be IAW NEMA WC50

5. DC power cables shall be as follows:
   a. Plus: red color and identified with "+" symbol.
   b. Minus: black color and identified with "-" symbol.

c. N: white (if used).

I. Un-insulated Conductors: Un-insulated conductors shall be copper and comply with FS QQ-W-343.

2.2 CONNECTORS AND SPLICES

A. UL-listed factory-fabricated wiring connectors of size, ampacity rating, material, and type and class for applications and for service indicated. Select to comply with project's installation requirements and as specified in PART 3.

B. Connectors, Splice Sleeves, and Terminal Lugs: Wire and cable connectors, lugs, and sleeves shall be in compliance with UL 486A, and the following:

1. For splices of 10 AWG and smaller building wires in lighting circuits, use tin plated copper compression type connector caps with nonflammable, self-extinguishing insulation grip with temperature rating equal to that of conductor insulation.
2. Use ring tongue compression type terminators with insulated barrel on all stranded conductors used in control wiring.
3. Crimp type connectors are not permitted on solid conductors.

C. Insulating Tape: ASTM D 1000. As a minimum, rate equal to conductor insulation. Rubber tape shall be silicon rubber with silicon pressure sensitive adhesive.

D. Bundling Straps: Nylon straps with a locking hub or head on one end and a taper on the other.

PART 3 - EXECUTION

3.1 EXAMINATION

A. Examine raceway and building finishes to receive wires and cables for compliance with installation tolerances and other conditions. Verify that the duct or conduit is open, continuous, and clear of debris before installing cable. Do not proceed with installation until unsatisfactory conditions have been corrected.

3.2 APPLICATIONS

A. UPS Feeders: Type THWN-2 or approved equal, copper conductor 90 degrees C insulation, in raceway.

B. Feeders: Type THHN/THWN, copper conductor 75 degrees C insulation, in raceway.

C. Indoor Branch Circuits: Type THHN/THWN, copper conductor, 75 degrees C in raceway. Use this conductor for lighting and receptacle circuits in dry locations only.

D. Exterior Branch Circuits: Type THWN, copper conductor, 75 degrees C insulation, in raceway.

E. Communications System Wiring: Communications System wiring (to include telephone cable, fire alarm cable, security wiring, inter-communication wiring and public address/music system) shall be as specified under applicable sections and specified requirements of NFPA 70. Use copper wire or fiber optics cable only. Aluminum wire is not permitted.

3.3 INSTALLATION

A. Install wires and cables as indicated, according to manufacturer's written instructions and NECA. Pull conductors into raceway simultaneously where more than one is being installed in same raceway.

1. Use pulling compound or lubricant where necessary; compound used must not deteriorate conductor or insulation, and must be non-flammable.
2. Use pulling means; including fish tape, cable, rope, and basketweave wire/cable grips that will not damage cables or raceway.
3. Bend to radii not less than the minimum bending recommended by manufacturer or 12 times the outer diameter of cable. Do not exceed the pulling tension recommended by manufacturer.

B. Cable shall be installed in a manner to prevent harmful stretching of the conductor, injury to the insulation or damage to the outer protective covering. Install exposed cable, parallel and perpendicular to surfaces or exposed structural members, and follow surface contours where possible. The ends of cables shall be sealed with moisture-seal tape before pulling, and it shall be left sealed until connections are made.

C. No splices shall be allowed on critical power circuits and feeders.

D. Conductor Splices: Keep to a minimum.

E. Splices shall be made only at outlets, junction boxes, or accessible raceways.

F. Wire nuts may only be used to splice conductors sized No. 10 AWG and smaller.

G. Compression connectors shall be used to splice conductors No. 8 AWG and larger.

H. All splices, including those made with insulated wire nuts, shall be insulated with electrical tape or heat-shrink tubing to a level equal to that of the factory insulated conductors.

I. Splicing of ungrounded conductors in panelboards is not permitted.

J. Splices shall be made with solderless connectors conforming to UL 486A, UL 486C, UL 486E and FS W-S-610.

K. Install splices and insulating tapes that possess equivalent or better mechanical strength and insulation ratings than conductors being spliced.

L. Use splice and tap connectors that are compatible with conductor material.

M. Splice methods and material shall be of a type recommended by the manufacturer of the splicing material for the particular type of cable being spliced and shall be approved by the Contracting Officer's Technical Representative prior to installation.

N. Wiring at Outlets: Install with at least 6 inches of slack conductor at each outlets.

O. Connecting Outlets and Components: Connect outlets and components to wiring and to ground as indicated and instructed by manufacturer. Tighten connectors and terminals, including screws and bolts, according to equipment manufacturer's published torque-tightening values for equipment connectors. Where manufacturer's torqueing requirements are not indicated, tighten connectors and terminals according to tightening torques specified in UL 486A.

P. Critical Circuits: Conductors for critical circuits, emergency lighting, security systems, and fire alarm systems shall be kept completely independent from any other system as well as each other.

Q. Cable/Conductor Installation: Cables/Conductors sized 250 kCMIL and greater shall be installed with the sue of a hydraulic cable bender. Cable supports shall be required for stress relief. A splice shall not be pulled into a duct or conduit under any circumstance.

R. Neutral and Ground: Separate neutral and ground wires shall be provided for each over current protection device. Each branch circuit shall have its own neutral and ground conductor. Common neutral or ground is not acceptable. Neutral conductors shall extend from the neutral bus where the phase conductors originate. Install conductors only after the raceway system is complete.

S. Electrical Identification: Install electrical identification devices specified in Section 26 05 53, “Identification for Electrical Systems” at terminations, immediately after installing wires and cables.

3.4 FIELD QUALITY CONTROL

A. Testing, General:

1. Cables shall be tested prior to installation and again upon completion of the installation. Testing shall be accomplished before connection is made. Tests shall be performed in the presence of the Contracting Officer's Technical Representative.
2. Upon installation of wires and cables and before electrical circuitry has been energized, demonstrate product capability and compliance with requirements.
3. Perform each visual and mechanical inspection and electrical test state in NETA ATS. Certify compliance with test parameters.
4. Test wire and cable for continuity or circuitry, and also for short circuits.

B. Insulation Resistance Tests: Feeder and branch circuit insulation tests shall be performed after installation, but before connection to equipment.

1. Conductors shall test free from short circuits and grounds, and have a minimum phase-to-phase and phase-to-ground insulation resistance of 30 mega-ohms when measured with a 500-volt DC insulation resistance. The Contractor shall submit a letter type test report to

the COTR prior to final inspection of the work. The report shall list the tests performed and results obtained.

2. Apply the test voltage for at least one minute after motor reading his stabilized.
3. See attachment No. 2 of this division for example test report.

C. Malfunctioning Products: Correct malfunction products at site, where possible, and retest to demonstrate compliance; otherwise, remove and replace with new units, and retest.

ATTACHMENT NO. 2

Megger Test Report:

600 V CABLE INSULATION AND CONTINUITY TEST (power/control wire & cable)

Project Name _____ Date _____ Sheet No. _____ of ____
Project No. _____ Address _____

NOTE: 500 VOLT MEGOHMETER, MEGGER ALL PHASES, RECORD MINIMUM READING

Panel No. Ckt. No. Fedder No.	VOLTS	A-B	A-C	B-C	A-N*	B-N*	C-N*	A-G	B-G	C-G	N*-G	Approved:

N* - Perform test where neutral is available

END OF SECTION 26 05 19

SECTION 26 05 26 - GROUNDING AND BONDING FOR ELECTRICAL SYSTEMS

PART 1 - GENERAL

1.1 SUMMARY

A. This Section includes methods and materials for grounding systems and equipment.

1.2 REFERENCES

A. The publications listed below form a part of this Specification to the extent referenced. The publications listed below are referenced as the latest edition published as of the date of this document. The publications are referred to within the text by the basic designation only.

B. FAA Specifications and Standards

1. FAA-STD-19e Lightning and Surge Protection, Grounding, Bonding and Shielding Requirements: Boise ATCT/Base Building
2. FAA-STD-020a Transient Protection, Grounding Bonding and Sheilding for Electronic Equipment
3. 6950.19b Practices and Procedures for Lightning Protection, Grounding, Bonding and Shielding Implementation
4. 6950.20a Fundamental Considerations of Lightning Protection, Grounding, Bonding and Shielding

C. National Fire Protection Association (NFPA)

1. NFPA 70 National Electrical Code
2. NFPA 780 Standard for the Installation of Lightning Protection Systems

D. Institute of Electrical and Electronics Engineers (IEEE)

1. IEEE 1100 Powering and Grounding Sensitive Electronic Equipment
2. IEEE 81 Guide for Measuring Earth Resistivity, Ground Impedance, and Earth Surface Potentials of a Ground System
3. IEEE C62.41 Recommended Practice for Surge Voltages in Low-Voltage AC Power Circuits

E. Underwriters Laboratories (UL)

1. UL 467 Grounding and Bonding Equipment
2. UL 486A Wire Connectors and Soldering Lugs for Use with Copper Conductors

F. American Society for Testing and Materials (ASTM)

1. ASTM B 3 Standard Specification for Soft or Annealed Copper Wire

2. ASTM B 33 Standard Specification for Tinned Soft or Annealed Copper Wire for Electrical Purposes
3. ASTM B 8 Standard Specification for Concentric-Lay-Stranded Copper Conductors, Hard, Medium-Hard, or Soft

G. Occupational Safety and Health Administration (OSHA)

1. 29 CFR 1910.7 Definitions and Requirements for a Nationally Recognized Testing Laboratory (NRTL)

1.3 SUMMARY

A. This Section includes solid grounding of electrical systems and equipment and basic requirements for grounding for protection of life, equipment, circuits, and systems. Grounding requirements specified in this Section may be supplemented in other Sections of this Specification. Grounding requirements for FAA-occupied spaces often exceed NFPA 70 criteria. Install grounding systems in accordance with this Section and as indicated on the drawings.

1.4 SUBMITTALS

A. The following shall be submitted in accordance with Section 01 33 00, “Submittal Procedures:”

B. Product Data:

1. Grounding Rods
2. Connectors and Connection Materials
3. Grounding Fittings
4. Qualifications
5. Qualification data for firms and persons specified in "Quality Assurance" article to demonstrate their capabilities and experience. Include lists of complete projects with project names and addresses, names and addresses of architects and owners, and other information specified.

C. Test Reports:

1. Field Tests and Observation Reports: Certified by the testing organization and indicating and interpreting the test reports for compliance with performance requirements.

1.5 QUALITY ASSURANCE

A. Contractor shall test all material GFE or non-GFE as specified in Division 26 00 02 "Documentation, Testing, and Training Requirements" and 26 05 00 "Common Work Results".

B. Listing and Labeling: Provide products specified in this Section that are listed and labeled as defined in NFPA 70, Article 100.

1. Listing and Labeling Agency: Qualifications as defined in 29 CFR 1910.7.

PART 2 - PRODUCTS

2.1 WIRING AND CABLE GROUNDING CONDUCTORS

A. Comply with Section 26 05 19, "Low-Voltage Electrical Power Conductors and Cables." Conform to NFPA 70, except as otherwise indicated for conductor properties, including stranding.

B. Material: Copper. Use only copper wire for both insulated and bare grounding conductors in direct contact with earth, concrete, masonry, crushed stone, and similar materials.

C. Size: Comply with FAA-STD-19e.

D. Equipment Grounding Conductors: Insulated with green color insulation. Insulated conductors larger than #6AWG with black color insulation shall be allowed to be re-identified with green tape.

1. The equipment grounding conductor shall be routed in the same raceway as its' related phase and neutral conductors. Cord-connected equipment requiring an equipment ground shall include the equipment grounding conductor as an integral part of the power cord. Where power is supplied to electronic equipment through a cable and connector, the connector shall contain a pin to continue the equipment grounding conductor to the equipment chassis. Conduit or cable shields shall not be used as the equipment grounding conductor.

2. Grounding terminals in all receptacles on multioutlet assemblies shall be hardwired to an equipment grounding conductor. Strips that depend upon serrated or toothed fingers for grounding shall not be used.

3. All flexible metal conduits shall be provided with an external bonding jumper in addition to the internal equipment grounding conductor. Therefore, liquid tight flexible metal conduit must be used where any flexible metal conduit is required. The bonding jumper shall be a 6 AWG green-insulated stranded copper conductor – or the largest jumper the conduit grounding bushing permits. The bonding jumper shall terminate on fittings listed for grounding at each end of the liquid tight flexible metal conduit.

4. A separate equipment grounding conductor shall be provided for each overcurrent device and as required by the NEC.

E. Isolated Grounding Conductors: Insulated with green color insulation and yellow and red bands.

F. Single Point Grounding Conductors: Insulated, color shall be green with a bright yellow tracer.

G. Electronic Multipoint Ground System: Insulated; color shall be green with bright orange tracer. Where cables are concealed and not color coded, any exposed portion of the cable and each end of the cable for a minimum of 2 feet shall be color coded by green tape overlaid with bright orange tape to form the tracer. Where routed through raceways or wireways, or under raised floors, the color coding shall be such that by removing or opening any cover, color coding shall

be visible. Where conductors are routed through cable trays, color coding for a minimum length of 4 inches shall be accomplished at intervals not exceeding 3 feet between codings.

H. Grounding-Electrode Conductors: Stranded cable.

I. Underground Conductors: Bare, tinned, stranded, except as otherwise indicated.

J. Bare Copper Conductors: Conform to the following:

1. Solid conductors: ASTM B 3.
2. Assembly of stranded conductors: ASTM B 8.
3. Tinned conductors: ASTM B 33.

2.2 MISCELLANEOUS CONDUCTORS

A. Grounding Bus: Bare, annealed-copper. Size as indicated on drawings.

B. Braided Bonding Jumpers: Where electrical continuity across the shock mounts is necessary, bonding jumpers shall be installed across each shock mount. Jumpers of this application should have a maximum thickness of 0.025-inch, so that the damping efficiency of the mount is not impaired. In severe shock and vibration environments, solid straps may be corrugated, or flexible wire braid may be used. Braids are to be terminated with copper ferrules.

C. Raceway Bonding Jumpers: Copper, minimum size #6 AWG unless otherwise noted.

2.3 CONNECTOR PRODUCTS

A. Exothermic-Welded Connections: Provided in kit form and selected per manufacturer's written instructions for specific types, sizes, and combinations of conductors and connected items.

2.4 GROUNDING ELECTRODES

A. Grounding Rods: Grounding rods shall be copper or copper-clad steel, a minimum of 10 feet in length and 3/4-inch in diameter. Rod cladding shall not be less than 1/100-inch thick. Sectionalized type or exothermic butt welded rods shall be used when deeper earth penetration is required. Ground rods shall bear the manufacturer's name, trademark, and catalog number.

2.5 ELECTRONIC MULTIPOINT GROUND SYSTEM (MPG)

A. The electronic multipoint ground system is a network which provides multiple low impedance paths between various non-current carrying metal objects in facility, electronic equipment (chassis), and the earth electrode system. This system is intended to minimize the effects of spurious currents that may be present in the ground system due to equipment operation or malfunction, or from lightning discharges. The multipoint ground system shall not be used in lieu of the safety ground required by NFPA 70. The multipoint ground system is not to be used as a signal return path.

B. Multipoint Ground Plates and Buses: The location of the ground plate shall be chosen to facilitate the interconnection of all equipment enclosures, consoles, cabinets, racks, cases, etc., within a particular area. The distance from any ground plate to the specific individual equipment enclosure, console, rack, etc., being bonded to the MPG system shall never exceed three feet. Where more than one ground plate is necessary, they shall be installed at various locations within the facility to facilitate interconnection. Ground buses may be used when distributed grounding is desired or is more convenient with a long row of equipment cabinets – considering the requirement to be within three feet of the enclosure. Ground plates shall be copper and at least 12 inches long, 6 inches wide and ¼ inch thick. Ground buses shall be copper. Ground bus width and thickness shall be selected from Table-I, and shall be as long as required. Ground plates and buses shall be identified with a permanently attached plastic or metal label that is green with distinguishing bright orange slashes. The label shall bear the caption "ELECTRONIC MULTIPOINT GROUND SYSTEM" in black 3/8-inch (10 mm) high letters.

C. Ground Conductors – Earth electrode System to Plates: Conductors in the MPG system shall be insulated and sized in accordance with Table-IX of FAA STD-019e, based on the distance between the Earth Electrode System and the furthest plate along any single path - but in no case smaller than 4/0 AWG. Conductors shall be color-coded green with an orange tracer or shall be clearly marked for four inches at each end and wherever exposed with green tape and an orange tracer. Additionally, when routed in cable trays, conductors shall be color-coded every three feet. Where MPG conductors are routed through cable trays, they shall be separated from the other conductors as far as possible.

2.6 POWER DISTRIBUTION SYSTEM GROUNDING

A. The facility electrical grounding shall comply with NFPA 70. The electronic ground systems shall not replace or be used in lieu of the power distribution system grounding conductors.

PART 3 - EXECUTION

3.1 APPLICATION

A. Equipment Grounding Conductors: All metallic non-current carrying parts of electrical equipment shall be grounded with equipment grounding conductors whether or not shown on the drawings. Equipment grounding conductors shall be green insulated copper conductors unless otherwise indicated. When these conductors are not sized nor shown on the contract drawings, size them in accordance with FAA-STD-19e. In no case, however, shall these conductors be smaller than No. 12 AWG. Install green, equipment grounding conductor with all feeder and branch circuit conductors.

1. Air-Duct Equipment Circuits: Install an equipment grounding conductor to duct-mounted electrical devices operating at 120 V and above, including air cleaners and heaters. Bond conductor to each unit and to air duct.

B. Separately Derived Systems: Ground according to NFPA 70.

C. Connections to Lightning Protection System: Bond grounding conductors, including grounding-conductor conduits, to lightning protection down conductors or lightning protection grounding conductors in compliance with NFPA 780, FAA-STD-019e.

D. Grounding Bushing: Provide a grounding bushing for rigid steel conduit entering or leaving a facility building. Ground both ends of the rigid conduit from the grounding bushings to the counterpoise using a #2 AWG minimum bare copper cable, or as indicated on the drawings. Provide for power cable and spare conduit. Conduit fittings and joints shall be electrically continuous with bonding resistance of 1 milliohms or less between joined parts.

E. Conduit or Cable Shields: Conduit or cable shields shall not be used as the equipment grounding conductor.

F. Metallic Non-current Carrying Parts: All metallic non-current carrying parts of electrical and mechanical equipment throughout the facility shall be bonded by welding with a separate equipment grounding conductor, #4 AWG (with green insulation) or larger and connected to the multipoint ground system. All metallic non-current carrying parts of electrical and mechanical equipment shall be grounded with equipment grounding conductors whether or not shown on the drawings.

3.2 INSTALLATION

A. The grounding requirements exceed those of NFPA 70. Grounding system shall be as indicated on the contract drawings and as specified herein. Reference FAA-STD-019e and IEEE 1100 when installing equipment. In no case shall NFPA 70 be violated.

B. Ground Rods: Install ground rods as follows:

1. Grounding rods shall be as widely spaced as practical, and in no case shall be spaced less than 1 rod length apart. Nominal spacing between rods shall be between 2 and 3 times rod length.
2. Tops of vertically-driven ground rods shall be not less than 12 inches below grade level.
3. Ground rods shall be located 2 to 6 feet outside the foundation or exterior footing of the structure. On buildings with overhangs, ground rods may be located further out.

C. Grounding Electrode Conductor:

1. The grounding electrode conductor shall be bare or insulated copper, and shall be sized as shown in the contract documents. When not indicated in the contract documents, the conductor shall be copper and sized according to NFPA 70, except that the conductor shall not be smaller than #2 AWG. Where the grounding electrode conductor is routed through a metal raceway, the raceway shall be electrically continuous and bonded to the conductor at each end. The grounding electrode conductor shall be bonded to the earth electrode system with an exothermic-welded joint. For a separately derived system such as an isolation transformer, the grounding electrode conductor shall be connected in accordance with other parts of this Section. This conductor shall terminate by exothermic welding to the closest effectively grounded building steel or as indicated on the drawings.

D. Grounding Conductors: Route along the shortest and straightest paths possible, except as otherwise indicated. Avoid obstructing access or placing conductors where they may be subjected to strain, impact or damage.

E. Equipment Enclosure Grounding:

1. Ground lugs shall be mounted on clean, bare metal surfaces that are free of paint, rust, etc. All ground lugs shall be of a noncorrosive material suitable for use as a grounding connection, and must be compatible with the type of metal being grounded. Bare wire, wrapped around connecting screws or mounting bolts and screws is not acceptable as a grounding connection.

F. Raceway Grounding:

1. Surface metal raceways, wireways, or cable rack systems shall be installed in a manner that ensures electrical continuity, or short bare copper bonding jumpers shall be installed between adjacent raceway sections to ensure proper bonding. Unless otherwise indicated, the minimum size for these bonding jumpers shall be #6 AWG.

G. Interior Metal Piping and Air Ducts: Bond interior metal piping systems and metal air ducts to equipment grounding conductors of associated pumps, fans, blowers, electric heaters, and air cleaners. Use braided-type bonding straps.

H. Fault Protection: Prevent equipment parts subject to human contact during operation and maintenance from being electrically energized when powering faults or components fail. Ground parts with a low impedance path to the chassis or cabinets in which they are mounted.

3.3 CONNECTIONS

A. Make connections so possibility of galvanic action or electrolysis is minimized. Select connectors, connection hardware, conductors, and connection methods so metals in direct contact will be galvanically compatible. Use electroplated or hot-tin-coated materials to ensure high conductivity and to make contact points closer in order of galvanic series. Make connections with clean, bare metal at points of contact. Coat and seal connections having dissimilar metals with inert materials to prevent future penetration of moisture to contact surfaces.

B. Exothermic-Welded Connections: Use for connections to structural steel, for underground connections, and where indicated on drawings. Comply with manufacturer's written instructions. Welds that are puffed up or that show convex surfaces indicating improper cleaning are not acceptable.

C. Terminations: Terminate insulated equipment grounding conductors for feeders with pressure-type grounding lugs. Where metallic raceways terminate at nonmetallic or nonconductive housings, terminate each conduit with a grounding bushing. Connect grounding bushings with a bare grounding conductor to the ground bus in the housing. Bond electrically non-continuous conduits at both entrances and exits with grounding bushings and bare grounding conductors.

D. Raceway Grounding: Surface metal raceways, wireways, or cable rack systems shall be installed in a manner that ensures electrical continuity. Insulated copper bonding jumpers shall

be installed between adjacent raceway sections to ensure proper bonding. Uninsulated conductors shall not be used. Unless otherwise indicated, the minimum size for these bonding jumpers shall be #6 AWG. All metallic raceway penetrations into a facility structure shall be bonded to the earth electrode system.

E. Tightening of Connectors: Tighten grounding and bonding connectors and terminators, including screws and bolts, in accordance with torque tightening values specified in UL 486A.

F. Compression-Type Connections: Use hydraulic compression tools to provide correct circumferential pressure for compression connectors. Mechanical connections using a Burndy "Hyground Connector", Thomas and Betts Compression Connector or FAA approved equivalent equipment when operated at the manufacturer's recommended pressure to develop a minimum force of 12 tons is acceptable as approved pressure connectors. Provide embossing die code or other standard method to make a visible indication that a connector has been adequately compressed on ground conductor. Hydraulically crimped connectors are not acceptable in the lightning protection system.

3.4 FIELD QUALITY CONTROL

A. Contractor shall test all material GFE or non-GFE as specified in Division 26 00 02 "Documentation, Testing, and Training Requirements" and 26 05 00 "Common Work Results".

1. Tests: Subject the completed grounding system to a test using a ground test null balance megger at system ground well, where a 10 ohm measurement is required. Measure ground resistance not less than 2 full days after the last trace of precipitation, and without the soil being moistened by any means other than natural drainage or seepage and without chemical treatment or other artificial means of reducing natural ground resistance. Perform tests by the 2-point method in accordance with IEEE 81.

   a. Earth electrode system ground shall not exceed 10 ohms.
   b. All grounds, bonds, and continuity tests that fail to meet the minimum standards and resistivity levels as set forth in these electrical specifications shall have their materials removed and replaced and shall have all workmanship redone. If after retesting they fail to meet minimum requirements, the work shall be redone until such work and retesting passes the minimum design parameter requirements.
   c. All sections of joined conduit, cable tray, or structural steel columns and beams shall have the first 10 consecutive connections of each system tested for continuity/grounding/bonding. If they test within acceptable limits, then test every 10th consecutive connection thereafter. If any test point is higher than specified in these electrical sections then test the next 10 consecutive connections and/or as many points as required to get a satisfactory reading below the specified rating. If more than 10 test points of each system are above the specified values, then all continuity/grounding/bonding points in that system shall be tested.

B. Report: Prepare test reports, certified by the testing organization of ground resistance at each test location. Include observations of weather and other phenomena that may affect test results.

3.5 ADJUSTING AND CLEANING

A. Restore surface features, including vegetation, at areas disturbed by work of this Section. Reestablish original grades, except as otherwise indicated. Where sod has been removed, replace it as soon as possible after backfilling is completed. Restore areas disturbed by trenching, storing of dirt, cable laying, and other activities to their original condition. Include top soiling, fertilizing, liming, seeding, sodding, sprigging, and mulching. Comply with Section 26 05 00, "Common Work Results for Electrical." Maintain restored surfaces.

END OF SECTION 26 05 26

SECTION 26 05 29 - HANGERS AND SUPPORTS FOR ELECTRICAL SYSTEMS

PART 1 - GENERAL

1.1 SUMMARY

A. This Section includes secure sport from the building structure for electrical items by means of hangers, supports, anchors, sleeves, inserts, seals, and associated fastenings.

1.2 REFERENCE STANDARDS

A. The publications listed below form a part of this Specification to the extent referenced. The publications listed below are referenced as the latest edition published as of the date of this document. The publications are referred to within the text by the basic designation only.

B. ASTM International (ASTM)

1. ASTM A 36 Standard Specification for Carbon Structural Steel
2. ASTM A 53 Standard Specification for Pipe, Steel, Black and Hot-Dipped, Zinc-Coated, Welded and Seamless

C. National Fire Protection Association (NFPA)

1. NFPA 70 National Electrical Code

D. Underwriters Laboratories (UL)

1.3 SUBMITTALS

A. Product data for each type of product specified.

1.4 QUALITY ASSURANCE

A. Electrical Component Standards: Components and installation shall comply with NFPA 70. Electrical components shall be listed and labeled by UL or other approved, nationally recognized testing and listing agency that provides third-party certification follow-up services.

PART 2 - PRODUCTS

2.1 COATINGS

A. Supports, support hardware, and fasteners shall be protected with zinc coating or with treatment of equivalent corrosion resistance using approved alternative treatment, finish, or inherent material characteristic. Product for use outdoors shall be hot-dip galvanized.

2.2 MANUFACTURED SUPPORTING DEVICES

A. Raceway Supports: Clevis hangers, riser clamps, conduit straps, threaded C-clamps with retainers, ceiling trapeze hangers, wall brackets, and spring steel clamps.

B. Fasteners: Types, materials, and construction features as follows:

1. Expansion Anchors: Carbon steel wedge or sleeve type.
2. Toggle Bolts: All steel springhead type.
3. Powder Actuated Fasteners: Not Allowed.

C. U-Channel Systems: 16-gage steel channels, with 9/16-inch diameter holes, at a minimum of 8 inches on center, in top surface. Provide fittings and accessories that mate and match with U-channel and are of the same manufacture.

D. Conduit Sealing Bushings: Factory-fabricated assembly consisting of threaded body and insulating wedging plug for non-armored electrical cables in conduits subject to exposure to water and/or oil penetration at conduit joints. Provide plugs with number and size of conductor gripping holes as required to suit installation. Construct body of malleable iron casting with hot-dipped galvanized finish. Support systems shall be capable of carrying the weight of the box and its contents.

E. Fasteners for Plastic-Laminated and Metal Signs: Self-tapping stainless steel screws or No. 10/32 stainless steel machine screws with nuts and flat end lock washers. Provide steel channel supports with 9/16-inch diameter holes at a maximum of 8 inches on center, in at least one surface. Fittings and accessories to mate and match with channels and to be form same manufacturer.

2.3 FABRICATED SUPPORTING DEVICES

A. General

1. Shop or Field-fabricated supports or manufactured supports assembled from U-channel components.

B. Steel Brackets: Fabricated of angels, channels, and other standard structural shapes. Connect with welds and machine bolts to form rigid supports.

C. Pipe Sleeves: ASTM A 53, Type E, Grade A, Schedule 40, galvanized steel, plain ends.

1. Sheet Metal: Fabricate from galvanized sheet metal; round tube closed with welded spiral seams or welded longitudinal joint. Fabricate sleeves from the following gage metal for sleeve diameter noted:

a. 3-inch and smaller: 20-gage
b. 4-inch to 6-inch: 16 gage
c. over 6-inch: 14 gage
d. Steel Pipe: Fabricate from Schedule 40 galvanized steel pipe.

D. Supplementary Structural Supports: ASTM A 36 steel shapes.

1. Supports and supporting devices shall be designed and installed to withstand the local code equivalent of a minimum UBC Seismic Zone 2A force.
2. Provide the installation of supplementary structural supports required for attachment of hangers and other devices supporting electrical equipment and conduits.
3. Members welded to main structural members shall be equal to the specification for the main structural member.
4. Size support members for their actual loads and safety factors without excessive deflection and with consideration for rigidity under vibration.

PART 3 - EXECUTION

3.1 INSTALLATION

A. Install supporting devices to fasten electrical components securely and permanently in accordance with NFPA 70. Coordinate with the building structural system and with other electrical installation.

B. Raceway Supports: Comply with NFPA 70 and the following requirements:

1. Conform to manufacturer's recommendations for selection and installation of supports.
2. Strength of each support shall be adequate to carry design load plus 25 percent for future use, multiplied by a safety factor of at least four. Where this determination results in a safety allowance of less than 200 pounds, provide additional strength until there is a minimum of 200 pounds safety allowance in the strength of each support.
3. Install individual and multiple (trapeze) raceway hangers and riser clamps as necessary to support raceway. Provide U-bolts, clamps, attachments, and other hardware necessary for hanger assembly and for securing hanger rods and conduits.
4. Support parallel runs of horizontal raceways together on trapeze-type hangers.
5. Support individual horizontal raceways by separate pipe hangers. Spring steel fasteners may be used in lieu of hangers only for 1 1/2-inch and smaller raceways serving lighting and receptacle branch circuits above suspended ceilings only. For hanger rods with spring steel fasteners, use 1/4-inch diameter or larger threaded steel. Use spring steel fasteners that are specifically designed for supporting single conduits or tubing.
6. Space supports for raceway in accordance with Table I of this Section. Space supports for raceway types not covered by the above in accordance with NFPA 70.
7. Support exposed and concealed raceway within 1-foot of an unsupported box and access fittings. In horizontal runs, support at the box and access fittings may be omitted where box or access fittings are independently supported and raceway terminals are not made with chase nipples or thread-less box connectors.
8. In vertical runs, arrange support so the load produced by the weight of the raceway and the enclosed conductors are carried entirely by the conduit supports with no weight load on raceway terminals.

C. Miscellaneous Supports: Support miscellaneous electrical components as required to produce the same structural safety factors as specified for raceway supports. Install metal channel racks for mounting cabinets, panel boards, disconnects, control enclosures, pull boxes, junction boxes, transformers, and other devices.

D. Open Overhead Spaces: In open overhead spaces, cast boxes threaded to raceways need not be supported separately except where used for fixture support; support sheet metal boxes directly from the building structure or by bar hangers. Where bar hangers are used, attach the bar to raceways on opposite sides of the box and support the raceway with an approved type of fastener not more than 24 inches form the box. Cast metal boxes having thread-less connectors and sheet-metal boxes shall be supported directly from the building structure or by bar hangers.

E. Fastening: Unless otherwise indicated, fasten electrical items and their supporting hardware securely to the building structure, including but not limited to conduits, raceways, cables, cable trays, busways, cabinets, panel boards, transformers, boxes, disconnect switches, lighting fixtures, and control components in accordance with the following:

1. Fasten by means of wood screws, nails, screw-type nails, carriage bolts, or lag screws of equal holding strength on wood; toggle bolts on hollow masonry units concrete inserts or expansion bolts on concrete or solid masonry; and machine screws, welded threaded studs, or spring-tension clamps on steel. Threaded studs driven by a powder charge and provided with lock washers and nuts may be used instead of expansion bolts and machine or wood screws. Do not weld conduit, pipe straps, or items other than threaded studs to steel structures. In partitions of light steel construction, use sheet metal screws.
2. Holes cut to depth of more than 1 1/2 inches in reinforced concrete beams or to depth of more than 3/4-inch in concrete shall not cut the main reinforcing bars. Patch holes that are not used with like and kind materials.
3. Coordinate any cutting or boring of structural beams with Structural Engineer prior to any work being done.
4. Ensure that the load applied to any fastener does not exceed 25 percent of the proof test load. Use vibration- and shock-resistant fasteners for attachments to concrete slabs.
5. Coordinate with structural engineer on expansion joints used to support raceway.

F. Tests: Provide all calibrated jacks, jigs, and fixtures, indicate scales required for reliable testing. Obtain the COTR's approval before transmitting loads to the structure. Test to 90 percent of rated proof load for fastener. If fastening fails test, revise all similar fastener installations and retest until satisfactory results are achieved. Test pull-out resistance of one of each type, size, and anchorage material for expansion anchors and toggle bolts.

TABLE I: SPACING FOR RACEWAY SUPPORTS

Raceway Size (Inches)	No. of Conduits In Run	Location	RMC & IMC (1)	EMT (1)
HORIZONTAL RUNS				
1/2,3/4	1 or 2	Flat ceiling or wall.	5	5
1/2,3/4	1 or 2	Where it is difficult to provide supports except at intervals fixed by the building construction.	7	7
1/2,3/4	3 or more	Any location.	7	7
1/2	13 or more	Any location.		
1 & larger		1 or 2 flat ceiling or wall	6	6
1 & larger		1 or 2 where it is difficult to provide supports except at intervals fixed by the building construction	10	10
1 & larger		3 or more any location	10	10
Any		Concealed	10	10
VERTICAL RUNS				
1/2, 3/4		Exposed	7	7
1, 1-1/4		Exposed	8	8
1-1/2 and larger		Exposed	10	10
Any		Concealed	10	10

NOTES:

(1) Maximum spacing of supports (feet).

(2) Maximum spacing for IMC above apply to straight runs only.
Otherwise, the maximums for EMT apply.

Abbreviations:
EMT: Electrical metallic tubing
IMC: Intermediate metallic conduit
RMC: Rigid metallic conduit

END OF SECTION 26 05 29

SECTION 26 05 33 - RACEWAY AND BOXES FOR ELECTRICAL SYSTEMS

PART 1 - GENERAL

1.1 REFERENCES

A. The publications listed below form a part of this Specification to the extent referenced. The publications listed below are referenced as the latest edition published as of the date of this document. The publications are referred to within the text by the basic designation only.

B. FAA Standards (FAA)

1. FAA 1217f Electrical Work, Interior
2. FAA STD 019ELightning Protection, Grounding, Bonding and Shielding Requirements for Facilities

C. Federal Specifications (FS)

1. WW-C-566 Conduit, Metal flexible

D. American National Standards Institute (ANSI)

1. ANSI C80.1 Rigid Steel Conduit, Zinc-Coated
2. ANSI C80.3 Electrical Metallic Tubing, Zinc-Coated
3. ANSI C80.6 Intermediate Metal Conduit Zinc-Coated

E. National Fire Protection Association (NFPA)

1. NFPA 70 National Electrical Code

F. National Electrical Contractors Association (NECA)

1. NECA Standard of Installation

G. National Electrical Manufacturers Association (NEMA)

1. NEMA 250 Enclosures for Electrical Equipment (1000 Volts Maximum)
2. NEMA FB1 Fitting, Cast Metal Boxes, and Conduit Bodies, and Cable Assemblies
3. NEMA ICS-6 Industrial Control System Enclosure
4. NEMA OS1 Sheet-Steel Outlet Boxes, Device Boxes, Covers, and Box Supports
5. NEMA RN1 Polyvinyl Chloride (PVC) Externally Coated Galvanized Rigid Steel Conduit

H. Occupational Safety and Health Administration (OSHA)

1. 29 CFR 1910.7 Definitions and Requirements for a Nationally Recognized Testing Laboratory (NRTL)

I. Underwriters Laboratories (UL)

1. UL 1 Flexible Metal Conduit
2. UL 1242 Intermediate Metal Conduits
3. UL 360 Liquid-tight Flexible Metal Conduit
4. UL 486A Wire Connectors and Soldering Lugs for Use with Copper Conductors
5. UL 5 Surface Metal Raceways and Fittings
6. UL 50 Enclosures for Electrical Equipment
7. UL 514A Metallic Outlet Boxes
8. UL 514B Fittings for Conduit and Outlet Boxes
9. UL 6 Rigid Metal Conduit
10. UL 797 Electric Metallic Tubing
11. UL 870 Wireways, Auxiliary Gutter, and Associated Fittings

J. Steel Structures Painting Council (SSPC)

1. SSPC PS-10.01 Hot-Applied Coal Tar Enamel Painting System

1.2 SUMMARY

A. This Section includes raceways, fittings, boxes, enclosures, and cabinets for electrical wiring.

1.3 RACEWAY COMPONENTS

A. Raceways include the following:

1. Rigid metal conduit (RMC).
2. Intermediate metal conduit (IMC).
3. Electrical metallic tubing (EMT).
4. Liquidtight flexible conduit (LFMC).
5. Wireway.
6. Nonmetallic tubing and conduit.

1.4 BOXES, ENCLOSURES AND CABINETS

A. Boxes, enclosures, and cabinets include the following:

1. Device boxes.
2. Outlet boxes.
3. Pull and junction boxes.
4. Conduit bodies.
5. Cable access boxes.
6. Cabinets and hinged cover enclosures.

1.5 SUBMITTALS

A. The following shall be submitted in accordance with Section 01 33 00, “Submittal Procedures”:

1. Nonstandard boxes, enclosures and cabinets: Include layout drawings showing components, wiring, supports, and seismic bracing.

2. Surface raceway
3. Wireway and fittings
4. Floor boxes
5. Hinged cover enclosures and cabinets
6. Operation and Maintenance Data: Submit in accordance with Section 01 78 23, "Operation and Maintenance Data."

1.6 QUALITY ASSURANCE

A. Comply with the latest edition of NFPA 70 for components and installation. Boxes shall be sized in accordance with NFPA 70 Article 376. Comply with NECA.

B. Listing and Labeling: Provide products specified in this Section that are listed and labeled. The terms "Listed and Labeled" as defined in NFPA 70 Article 100.

C. Listing and Labeling Agency Qualifications: A NRTL as defined in 29 CFR 1910.7.

D. Layout Coordination: Coordinate layout and installation of raceway and boxes with other construction elements to ensure adequate headroom, working clearance and access. All outdoor boxes shall be rated minimum NEMA 4X.

PART 2 - PRODUCTS

2.1 GENERAL

A. Enclosures shall conform to NEMA standards. All materials procured under this Section shall be in accordance with FAA 1217f and FAA STD 019E.

2.2 METAL CONDUIT AND TUBING

A. Rigid Metal Conduit (RMC)

B. ANSI C80.1 and UL 6.

C. Plastic-Coated Steel Conduit and Fittings: NEMA RN1.

D. Intermediate Metal Conduit (IMC): ANSI C80.6 and UL 1242.

E. Electrical Metallic Tubing (EMT) and Fittings: UL 797 and ANSI C80.3 with compression-type fittings. Screw-type fittings are not acceptable. Use for lighting, building power, fire alarm, environmental and communication circuits in concealed areas where not subject to physical damage, such as suspended ceilings, furred walls and raised floors. Connectors shall have insulated-throat, smooth bell shaped end or a bushing.

F. Flexible Metal Conduit (FMC): Zinc-coated steel; UL 1 and WW-C-566. Conduit and fittings shall be type listed for grounding. Provide FMC in minimum 24 inches or 10 diameter lengths for connection to motors and equipment subject to vibration and movement.

G. Liquidtight Flexible Metal Conduit (LFMC): Flexible steel conduit with PVC jacket; UL 360.

H. Flexible Non-Metallic Conduit: Shall not be used.

I. Fittings: NEMA FB1 and UL 514B, compatible with conduit and of the threaded type. Set screw fittings are not allowed. Conduit expansion and deflection fittings shall be watertight. Fabricate from material compatible with conduit to be used. Expansion and deflection fittings shall be equipped with bonding jumper cable to provide electrical continuity. Lock-nut and bushings inside boxes or enclosures shall be grounding type.

J. Underground Fittings: Shall be protected by field wrapping, 0.01-inch thick pipe wrapping plastic tape applied with 50 percent overlap.

2.3 WIREWAYS

A. Material: Sheet metal sized and shaped as indicated.

B. Fittings and Accessories: UL 870. Include couplings, offsets, elbows, expansion joints, adapters, hold-down straps, end caps and other fittings to match and mate with wireway as required for complete system. Provide ground bushings on all conduit terminations to wireways and galvanized rigid steel as indicated in PART 3 of this Section. Select features where not otherwise indicated, as required to complete wiring system and to comply with NFPA 70.

C. Wireway Covers: Hinged type, unless noted otherwise.

D. Finish: Manufacturer's standard enamel finish. Provide NEMA rating appropriate for use intended.

2.4 OUTLET AND DEVICE BOXES

A. Boxes shall not contain concentric knockouts.

B. Sheet Metal Boxes: NEMA OS1 and UL 514A.

C. Cast Metal Boxes: NEMA FB1, type FD, cast ferro-alloy box with gasketed cover.

D. Exposed Outlet Boxes: UL 514A steel, malleable iron or cast iron boxes with threaded conduit entry for surface-mounting in areas having exposed conduit systems.

E. Flush Outlet Boxes: UL 514A hot-dip galvanized steel, square or rectangular, 2 1/8 inches deep by 4 inches square, with extension ring where necessary.

F. Boxes for Lighting Fixtures: Flush-mounted or in concealed areas to be octagonal, 4 inches by 2 1/8 inches deep, galvanized steel, with fixture stud supports and attachments to properly support ceiling and bracket type lighting fixtures. Surface-mounted to be malleable or cast iron boxes with threaded conduit hub.

G. Fittings: UL 514B.

2.5 PULL AND JUNCTION BOXES

A. Small Sheet Metal Boxes: NEMA OS1 and UL 514A.

B. Cast Metal Boxes: Threaded-hub type conforming to UL 514A and UL 514B. Galvanized steel conforming to UL 514A and UL 514B.

2.6 CABINETS AND ENCLOSURES

A. Hinged Cover Enclosures: NEMA 250, steel enclosure with continuous hinge cover and flush latch. Finish inside and out with manufacturer's standard enamel.

B. Cabinets: NEMA 250, type 1 code gauge galvanized steel box with removable interior panel and removable front, finished inside and out with manufacturer's standard enamel. Hinged door in front cover with flush latch and concealed hinge. Include metal barriers to separate wiring of different systems and voltage, and include accessory feet where required for freestanding equipment. Cabinets shall be constructed with interior dimensions not less than those indicated on the drawings. Provide 5/8-inch plywood backboard unless otherwise indicated. Key latch to match panelboards. Provide two keys with each cabinet unless otherwise notified.

C. Safety: UL 50.

D. Control Enclosures: NNEMA ICS-6.

E. Telephone and Signal Cabinets: Construct in accordance with NFPA 70 Article 312.

PART 3 - EXECUTION

3.1 EXAMINATION

A. Examine surfaces to receive raceways, boxes, enclosures and cabinets for compliance with installation tolerances and other conditions affecting performance of the raceway system. Do not proceed with installation until unsatisfactory conditions have been corrected. Examine raceways prior to installation. No crushed or deformed raceways shall be installed.

3.2 WIRING METHODS

A. Outdoors: Use the following wiring methods:

1. Exposed: RMC.
2. Concealed: RMC.
3. Underground, Single Run: Zinc coated rigid galvanized steel conduit and fittings.
4. Underground, Grouped: Zinc-coated rigid galvanized steel conduit and fittings.
5. Connection to Vibrating Equipment (including transformers and hydraulic, pneumatic, or electric solenoid or motor-driven equipment): LFMC.
6. Boxes and Enclosures: NEMA Type 4X.
7. Indoors: Use the following wiring methods:

a. Connection to Vibrating Equipment (including transformers and hydraulic, pneumatic, or electric solenoid or motor-driven equipment): LFMC.
b. Damp or Wet Locations: RMC.
c. Exposed: RMC or IMC. Rigid metal conduit shall be used in the electrical/mechanical room to a height of 8 feet above finished floor.
d. Concealed: EMT, IMC, RMC (EMT shall only be used for lighting, receptacles, communications, fire alarm, security and environmental conditions in concealed locations indoors).
e. Boxes and Enclosures: NEMA Type 1, except in damp or wet locations use NEMA Type 4, stainless steel.

8. Conduit Use: Install RMC or IMC for all branch circuit panelboard feeders, distribution panel board feeders, transformer feeders, motor control center feeders and distribution switchboard feeders. Install EMT for communication, lighting and power branch circuits. USE RMC for all exposed conduit systems within electrical and mechanical equipment rooms and electrical closets from floor level to a height of 8 feet above finished floor. Conduit for communications, lighting and power branch circuits may be transitioned to EMT above 8 feet above finished floor.

3.3 INSTALLATION

A. Products shall be installed in accordance with FAA-C-1217f and FAA-STD-019e. Install raceways, boxes, enclosures and cabinets as indicated, according to manufacturer's written instructions. Minimum size raceway shall be 3/4-inch, unless otherwise noted. Conduit for telephone and signal systems shall be as follows:

1. 3/4-inch conduit may be used for lengths not exceeding 100 feet.
2. 1-inch conduit shall be used for lengths exceeding 100 feet.
3. No run shall contain more than four 90 degree bends, or the equivalent.
4. Provide pull and junction boxes as required to meet the above criteria.

B. Conduit/Raceway Installation: Conceal conduit including EMT, unless otherwise indicted, within finished walls, ceilings and floors. Raceways shall not be attached to the ceiling suspension system. Raceways shall not be attached to or supported by roof decks. Do not anchor or strap raceways to wall furring channels or to other raceways. Keep raceways at least 6 inches away from parallel runs of flues and steam or hot water pipes. Do not install raceways near uninsulated high temperature services without prior approval of the Contracting Officer's Technical Representative. Install horizontal raceway runs above water and steam piping.

1. Install raceways level and square and at proper elevations. Provide adequate headroom. Conduits and raceways shall run parallel or perpendicular to building structural members.
2. Install conduit to drain moisture to nearest outlet or pull box.
3. Inside radii of bends in conduits shall not be less than 6 times the nominal diameter.
4. No run shall contain more than four 90 degree bends, or the equivalent between conduit terminations.
5. Signal raceway 2 inches and smaller shall have no run of 1/2-inch or 3/4-inch exceed 50 feet; or 100 feet for 1-inch or larger and a maximum of two 90 degree bends, or the equivalent. Install pull boxes or junction boxes where necessary to comply with these requirements.
6. Provide conduit bodies, pull and junction boxes required to meet the bends criteria.

7. Provide a pull box for critical power circuits for three 90 degree bends. Threaded conduit bodies shall be used for all critical power circuits.
8. Install a pull wire in all empty tubing and conduit systems. Pull wire shall be No. 14 AWG zinc-coated steel or plastic with a minimum 200 pound tensile strength. Provide 10 inches of slack at each end of the pull wire.
9. Complete raceway installation before starting conductor installation. Raceways shall be fished and swabbed before conductors are pulled.

C. Support of Raceways: Support raceways and boxes as specified in Section 26 05 29, "Hangers and Supports for Electrical Systems." Boxes for fixtures on suspended ceilings shall be supported independently of the ceiling supports. Boxes shall not be supported from sheet metal roof decks.

D. Raceway Protection: Use temporary closures to prevent foreign matter from entering raceway. Prevent the lodgment of plaster, dirt or trash in raceways, boxes, fittings, and equipment during construction. Clogged raceways shall be entirely freed of obstructions or shall be replaced. Clean each conduit run before pulling in conductors. Protect stub-ups from damage where conduits rise through floor slabs.

E. Bends and Offsets: Make bends and offsets so the inside diameter is not reduced. Unless otherwise indicated, keep the legs of a bend in the same plane and the straight legs of offsets parallel. IMC bends shall be fabricated with tooling specifically designed for bending IMC. Signal conduit that is 1-inch and larger shall have a minimum inside radii 12 times the nominal conduit diameter. No run shall contain more than four 90 degree bens or the equivalent. Provide pull and junction boxes required to meet the bends criteria. For critical power conduits, only conduit bodies are allowed.

F. Raceway Fittings: Use raceway fittings compatible with raceway and suitable for use and location. EMT conduit shall employee compression type fittings. For RMC and IMC conduit, use threaded rigid steel conduit fittings, except as otherwise indicated. Screw type fittings shall not be used.

G. Concealed Raceways: Run concealed raceways with a minimum of bends in the shortest practical distance considering the type of building construction and obstructions, except as otherwise indicated.

H. Raceways in Damp, Concealed or Underground Locations: Raceways or sections of raceways which pass through to damp, concealed, or underground locations shall be of a type allowed for such locations by NFPA 70 and shall extend a minimum of 12 inches beyond the damp, concealed, or underground area.

I. Floor and Wall Penetrations: Penetrations through walls or floors shall be sealed to prevent moisture and rodent entry and to deter air transfer. Seal penetrations of walls, which separate individually temperature or humidity controlled areas to prevent air circulation. Seal conduit penetrations between conditioned and unconditioned spaces with an approved removable material.

J. Installation at Structural Members: Install raceways parallel to or at right angles to nearby surfaces of structural members and follow the surface contours as much as practical. Run parallel or banked raceways together, on common supports where practical. Make bends in

parallel or banked runs from same centerline to make bends parallel. Use factory elbows only where they can be installed parallel; otherwise, provide field bends for parallel raceways.

K. Joining of Raceway Fittings: Join raceway fittings designed and approved for the purpose and make joints tight. Use bonding locknuts and bushings at connections subject to vibration. Use bonding jumpers where joints cannot be made tight. Use insulating bushings for all conduits to protect conductors. Provide expansion fittings for all raceways passing through the building expansion joints and for conduit runs longer than 300 feet.

L. Terminating: Where terminating in threaded hubs, screw the raceway or fitting tight into the hub so the end bears against the wire protection shoulder. Where chase nipples are used, align the raceway so the coupling is square to the box and tighten the chase nipple so no threads are exposed.

M. Pull Wires: Install pull wires in empty raceways. Use No. 14 AWG zinc-coated steel or monofilament plastic line having not less than 200 pound tensile strength. Leave not less than 12 inches of slack at each end of the pull wire.

N. Stub-Up Connections: Extend conduits through concrete floor for connection to freestanding equipment with an adjustable top or coupling threaded inside for plugs and set flush with the finished floor. Extend conductors to equipment with rigid steel conduit; flexible metal conduit may be used 6 inches above the floor. Where equipment connections are not made under this Contract, install screwdriver-operated threaded plugs flush with floor.

O. Flexible Connections: Use maximum of 6 feet of flexible conduit for recessed and semi-recessed lighting fixtures; for equipment subject to vibration, noise transmission or movement; and for all motors. Use liquidtight flexible conduit in wet or damp locations. Provide #6 AWG stranded insulated copper bonding jumper terminated on an approved grounding fitting at each end of the flex metal conduit.

P. Metal Conduits: Metal conduits shall be mechanically and electrically continuous between outlets, junction boxes and pull boxes, panels, cabinets and similar equipment. Conduits shall enter and be secured to enclosures so that each system is electrically continuous throughout.

Q. Enclosures and Cabinets: Install hinged cover enclosures and cabinets plumb. Support at each corner.

R. Grounding Connections: Provide grounding connections for raceways, boxes, and components. Tighten connectors and terminals, including screws and bolts, according to equipment manufacturer's published torque tightening values. Where manufacturer's torque requirements are not indicated, tighten connectors and terminals according to tightening torques specified in UL 486A. Provide ground bushings for all feeder conduits at switchgear, switchboards, panelboards, transformers, pull boxes and all other termination points. Where knockouts are used, provide double locknuts, one on each side with a grounding bushing or grounding locknut used on the inside (use grounding bushings on conduit 1-inch and larger).

S. Field-Cut Conduit: Where conduit has to be cut in the field, it shall be cut square. The cut ends of the field-cut conduit shall be reamed to remove burs and sharp edges.

T. Field-Threaded Conduit: Where threads have to be cut on conduit, the threads shall have the same effective length and shall have the same thread dimensions and taper as specified for factory-cut threads on conduit.

U. Boxes: Shall be provided in the wiring or raceway system for pulling wires, making connections and mounting devices or fixtures. Each box shall have the volume required by NFPA 70 for the number and size of conductors in the box. Label all junction/pull boxes with panelboard name and circuit number with permanent marker.

V. Outlet Boxes: Each outlet box shall have a machine screw which fits into a tapped hole in the box for the ground connection. Attach boxes to ceilings which are not suspended in at least two places. Distribute lighting fixture load over the ceiling boxes.

W. Mounting Light Fixtures: Boxes for mounting fixtures shall not be less than 4 inches square.

X. Concealed Wiring: Boxes installed for concealed wiring shall be provided with extension rings or plaster covers. The front edge of the box shall be flush or recessed not more than 1/4-inch from the finished wall surface (whether the finished surface is drywall, or drywall and a sound absorbing material).

Y. Boxes in Masonry Block or Tile Walls: Shall be square-cornered title-type, or standard boxes shall have square-cornered tile-type covers.

Z. Wet Locations: Cast metal boxes installed in wet locations and boxes installed flush with exterior surfaces shall be gasketed.

AA. Box Openings: Provide only the openings necessary to accommodate the conduits at the individual location. When this is not practical, plug unused openings.

BB. Junction, Transition, and Pull Boxes: Install junction, transition, and pull boxes so that covers are not readily accessible. Boxes in concealed areas of ceiling or wall shall be accessible through removable panels. Locate pull boxes to permit easy pulling of wire or cables. Securely attach boxes to structural and framing members using compatible fasteners of adequate size. Bolt wall-mounted boxes to steel profiles fastened to the wall.

CC. Grounding: Provide each box with a green machine screw. Screw into tapped hole in the box for ground wire or lug connection.

DD. RMC or IMC Below Slab on Grade or Underground: The conduit shall conform to SSPC PS-10.01 or shall be field wrapped with 0.01-inch thick pipe wrapping plastic tape applied with 50 percent overlay.

EE. EMT Entering Enclosure Without Threaded Hubs: Provide a connector with threads and cast or machined locknut. The connector body and locknut shall be installed so that firm contact is made on each side of the enclosure.

3.4 PROTECTION

A. Provide final protection and maintain conditions, in a manner acceptable to manufacturer and installer, to ensure that coatings, finishes, and cabinets are without damage or deterioration at

substantial completion. Repair damage to galvanized finishes with zinc-rich paint recommended by manufacturer. Repair damage to PVC or paint finishes with matching touch-up coating recommended by the manufacturer. Cap stubbed up raceways, including raceways in cabinets, immediately upon installation. The use of paper or rag wads is not acceptable.

B. Galvanic Corrosion Protection: Avoid dissimilar metals in contact anywhere in conduit runs. Where contact cannot be avoided at conduit terminations, treat the connection with joint compound that eliminates galvanic corrosion. Where dissimilar metals are in contact, such as at aluminum cable tray or enclosures and steel supports, separate contact surfaces by using gaskets, non absorptive tape or coating to prevent galvanic corrosion.

3.5 CLEANING

A. Upon completion of installation of system, including outlet fittings and devices, inspect exposed finish. Remove burrs, dirt, and construction debris and repair damaged finish, including chips, scratches, and abrasions.

END OF SECTION 26 05 33

SECTION 26 05 48 - VIBRATION AND SEISMIC CONTROLS FOR ELECTRICAL SYSTEMS

PART 1 - GENERAL

1.1 REFERENCES

A. The publications listed below form a part of this Specification to the extent referenced. The publications listed below are referenced as the latest edition published as of the date of this document. The publications are referred to within the text by the basic designation only.

B. ASTM International:

1. ASTM A 1011, Standard Specification for Steel, Sheet and Strip, Hot-Rolled, Carbon, Structural, High-Strength Low-Alloy and High-Strength Low-Alloy with Improved Formability.
2. ASTM A 325, Standard Specification for Structural Bolts, Steel, Heat Treated, 120/105 Ksi Minimum Tensile Strength.
3. ASTM A 36, Standard Specification for Carbon Structural Steel.
4. ASTM A 575, Standard Specification for Steel Bars, Carbon, Merchant Quality, M-Grades.
5. ASTM A 576, Standard Specification for Steel Bars, Carbon, Hot-Wrought, Special Quality.
6. ASTM B 603, Standard Specification for Drawn or Roller Iron-Chromium-Aluminum Alloys for Electrical Heating Elements.

C. International Code Council:

1. IBC, International Building Code.

D. Manufacturers standardization Society (MSS):

1. MSS SP-69, Pipe Hangers and Supports - Selection and Application.

1.2 SUMMARY

A. This Section includes seismic restraints and other earthquake damage reduction measures for electrical components. It complements optional seismic construction requirements in the various electrical component Sections.

1.3 DEFINITIONS

A. The IBC: International Building Code.

B. Seismic Restraint: A fixed device (a seismic brace, an anchor bolt, or stud, or a fastening assembly) used to prevent vertical or horizontal movement, or both vertical and horizontal movement, of an electrical system component during an earthquake.

C. Mobile Structural Element: A part of the building structure such as a slab, floor structure, roof structure, or wall that may move independent of other mobile structural elements during an earthquake.

D. Positive Attachment: A cast-in anchor, a drill-in wedge anchor, a double-sides beam clamp loaded perpendicular to a beam, or a welded or bolted connection to structure. Single-sided "C" type beam clamps for support rods of overhead equipment are not acceptable on this project as seismic anchor points.

E. Transverse Bracing: Restraint(s) applied to limit motion perpendicular to the centerline of the pipe or duct.

F. Longitudinal Bracing: Restraint(s) applied to limit motion parallel to the centerline of the pipe or duct.

G. Failure: For the purposes of this project, failure is defined as the discontinuance of any attachment point between equipment or structure, vertical permanent deformation greater than 1/8-inch and/or horizontal permanent deformation greater than 1/4-inch.

1.4 SUBMITTALS

A. The following shall be submitted in accordance with Section 01 33 00, “Submittal Procedures:”

1. Product Data: Illustrate and indicate types, styles, materials, strength, fastening provisions, and finish for each type and size of seismic restraint component used.
2. Anchor Bolts and Studs: Tabulate types and sizes, complete with report numbers and rated strength in tension and shear as evaluated by ICBO Evaluation Service, or an agency approved by authorities having jurisdiction.
3. Product Certificates: Signed by manufacturers of seismic restraints certifying that products furnished comply with requirements.

1.5 QUALITY ASSURANCE

A. Comply with NFPA 70 and FAA-C-1217f for components and installation. In case of conflict between provisions of codes, laws and ordinances, the more stringent requirement shall apply.

B. Material and Equipment Qualifications: Provide materials and equipment that are products of manufacturers regularly engaged in the production of such products which are of equal material, design and workmanship.

1.6 PROJECT CONDITIONS

A. Facility is an essential air traffic control facility. Design equipment, equipment bracing, and anchorage in accordance with the IBC. The requirements for seismic protection measures to be applied to electrical equipment and systems specified herein are in addition to any other items called for in other Sections of the Specification. Provide seismic bracing for equipment and systems within the project area.

B. Seismic Zone: Minimum Zone 2A for FAA Air traffic control facilities. Comply with the more stringent IBC requirements for Zone 2A.

1.7 COORDINATION

A. Coordinate layout and installation of seismic bracing with building structural system and architectural features, and with mechanical, electrical and other building features in the vicinity. Coordinate concrete bases with building structural system.

PART 2 - PRODUCTS

2.1 MATERIALS

A. Use the following materials for restraints:

1. Indoor Dry Locations: Steel, zinc plated.
2. Outdoor and Damp Locations: Galvanized steel.
3. Corrosive Locations: Stainless steel.

2.2 ANCHORAGE AND STRUCTURAL ATTACHMENT COMPONENTS

A. Strength: Defined in reports by ICBO Evaluation Service or another agency acceptable to authorities having jurisdiction.

B. Structural Safety Factor: Strength in tension and shear of components used shall be at least 2 times the maximum seismic forces to which they will be subjected.

C. Concrete and Masonry Anchor Bolts and Studs: Steel expansion wedge type.

D. Concrete Inserts: Steel channel type.

E. Through Bolts: Structural type, hex head, high strength. Comply with ASTM A 325.

F. Welding Lugs: Comply with MSS SP-69, Type 57.

G. Beam clamps for Steel Beams and Joists: Double-sided. Single-sided type is not acceptable.

H. Bushings for Floor-Mounted Equipment Anchors: Neoprene units designed for seismically rated rigid equipment mountings and matched to the type and size of anchor bolts and studs used.

I. Bushing Assemblies for Wall-Mounted Equipment Anchorage: Assemblies of neoprene elements and steel sleeves designed for seismically rated rigid equipment mountings and matched to the type and size of attachment devices used.

2.3 SEISMIC BRACING COMPONENTS

A. Slotted Steel Channel: 1 5/8-inch by 1 5/8-inch cross-section, formed from 0.1046-inch thick steel, with 9/16-inch by 7/8-inch slots at a maximum of 2 inches on center in webs, and flange edges turned toward web.

B. Materials for Channel: ASTM A 1011, GR 33.

C. Materials for Fittings and Accessories: ASTM A 575, ASTM A 576, or ASTM A 36.

D. Fittings and Accessories: Products of the same manufacturer as channels and designed for use with that product.

E. Finish: Baked, rust-inhibiting, acrylic-enamel paint applied after cleaning and phosphate treatment, unless otherwise indicated.

F. Channel-Type Bracing Assemblies: Slotted steel channel, with adjustable hinged steel brackets and bolts.

G. Cable-Type Bracing Assemblies: Zinc-coated, high-strength steel wire rope cable attached to steel thimbles, brackets and bolts designed for cable service. Arrange units for attachment to the braced component at one end and to the structure at the other end. For wire rope cable comply with ASTM B 603. Use 49- or 133-strand cable with a minimum strength of 2 times the calculated maximum seismic force to be resisted.

H. Hanger Rod Stiffeners: Slotted steel channels with internally bolted connections to hanger rod.

PART 3 - EXECUTION

3.1 APPLICATION

A. Comply with Section 26 05 00, “Common Work Results for Electrical”.

3.2 INSTALLATION

A. Install seismic restraints according to applicable codes and regulations and as approved by authorities having jurisdiction, unless more stringent requirements are indicated.

3.3 STRUCTURAL ATTACHMENTS

A. Attachments to Existing Concrete: Use expansion anchors.

B. Holes for Expansion Anchors in Concrete: Drill at locations and to depths that avoid reinforcing bars.

C. Attachments to Solid Concrete Masonry Unit Walls: Use expansion anchors.

D. Attachments to Hollow Walls: Bolt to slotted steel channels fastened to wall with expansion anchors.

E. Attachments to Wood Structural Members: Install bolts through members.

F. Attachments to Steel: Bolt to clamps on flanges of beams or on upper truss chords of bar joists.

3.4 ELECTRICAL EQUIPMENT ANCHORAGE

A. Anchor rigidly to a single mobile structural element or to a concrete base that is structurally tied to a single mobile structural element. Anchor panelboards, motor control centers, motor controls, switchboards, switchgear, transformers, unit substations, fused power circuit devices, transfer switches, busways, battery racks, static uninterruptible power units, power conditioners, capacitor units, communication system components, and electrical signal processing, control and distribution units as follows:

1. Size concrete bases so expansion anchors will be a minimum if 10 bolt diameters from the edge of the concrete base.
2. For concrete bases for floor-mount equipment use female expansion anchors and install studs and nuts after equipment is positioned.
3. Bushings for floor-mounted equipment anchors to be installed to allow for resilient media between anchor bolt or stud and mounting hole in concrete.
4. Anchor bolt busing assemblies for wall-mounted equipment to be installed to allow for resilient media where equipment or equipment-mounting channels are attached to wall.
5. Torque bolts and nuts on studs to value recommended by equipment manufacturer.

3.5 SEISMIC BRACING INSTALLATION

A. Install bracing according to spacing and strengths indicated by manufacturer.

B. Expansion and Contraction: Install to allow for thermal movement of braced components.

C. Cable Braces: Install with maximum cable slack recommended by manufacturer.

D. Attachment to Structure: If specific attachment is not indicated, anchor bracing to the structure at flanges of beams, upper truss chords of bar joists or at concrete members.

3.6 FIELD QUALITY CONTROL

A. Contractor shall perform the following field quality control testing:

1. Test pull-out resistance of seismic anchorage devices.
2. Provide necessary test equipment required for reliable testing.
3. Provide evidence of recent calibration of test equipment by a testing agency acceptable to authorities having jurisdiction.
4. Test at least 4 of each type and size of installed anchors and fasteners selected by Contracting Officer's Technical Representative (COTR).
5. Test to 90 percent of rated proof load of device.

6. If a device fails the test, modify all installations of same type and retest until satisfactory results are achieved.
7. Record test results.

B. Scheduling:

1. Schedule test with COTR, before connecting anchorage device to restrained component (unless post-connection testing has been approved) and with at least 7 days advance notice.

C. Testing Approval:

1. Obtain Contracting Officer's Technical Representative approval before transmitting test loads to the structure. Provide temporary load-spreading members as required.

2. COTR shall approve of all test results.

END OF SECTION 26 05 48

SECTION 26 05 53 - IDENTIFICATION FOR ELECTRICAL SYSTEMS

PART 1 - GENERAL

1.1 SUMMARY

1. This Section included identification of electrical materials, equipment, and installations. It includes requirements for electrical identification components, including but not limited to buried electrical line warnings; identification labeling for raceways, cables, and conductors; operational instruction signs; warning and caution signs; and equipment labels and signs.

1.2 REFERENCES

A. The publications listed below form a part of this Specification to the extent referenced. The publications listed below are referenced as the latest edition published as of the date of this document. The publications are referred to within the text by the basic designation only.

B. FAA Specifications and Standards

1. FAA 1217f, Electrical Work, Interior.

C. National Fire Protection Association (NFPA)

1. NFPA 70, National Electrical Code.
2. NFPA 70E, Standard for Electrical Safety in the Workplace

D. IEEE

1. C2-2007, National Electrical Safety Code

1.3 SUBMITTALS

A. The following shall be submitted in accordance with Section 01 33 00, “Submittal Procedures.”

B. Product Data: For each type of product specified.

C. Schedule of Identification Nomenclature: Provide a schedule of identification nomenclature to be used for identification signs and labels.

D. Labels and Signs: Samples for each color, lettering style and other graphic representation required for identification materials.

1.4 QUALITY ASSURANCE

A. Components and installation shall comply with NFPA 70. Comply with requirements of ANSI A13.1 with regard to type and size of lettering for raceway and cable labels.

1.5 SEQUENCING AND SCHEDULING

A. Coordinate installing electrical identification after completion of finishing where identification is applied to field-finished surfaces. Coordinate installing electrical identifying devices and markings prior to installing acoustical ceilings and similar finishes that conceal such items.

1. Provide Identification Labels on:
   a. UPS Equipment
   b. UPS Output circuit breaker
   c. UPS Battery Monitor circuit breaker
   d. Maintenance Bypass Panel
   e. Panel MDPE
   f. Panel MDPC
   g. UPS Load bank disconnect

2. Provide ARC Flash Labels on:
   a. UPS Output circuit breaker
   b. Maintenance Bypass Panel
   c. Essential Power Disconnect
   d. Panel MDPE
   e. Panel MDPC
   f. Critical Power Disconnect
   g. UPS Load bank disconnect

PART 2 - PRODUCTS

2.1 GENERAL

A. Materials procured and installed in this Section, as well as identification and nameplates shall be in accordance with FAA 1217f.

2.2 RACEWAY AND CABLE LABELS

A. Size: Conform to FAA STD-1217f for minimum size of letters for legend and minimum length of color field for each raceway or cable size.

1. Color: Black legend on white field.
2. Legend: Indicates voltage and service.

B. Adhesive Labels: Preprinted, flexible, self-adhesive vinyl. Legend is laminated with a clear, weather- and chemical-resistant coating.

C. Pre-tensioned, Wraparound Plastic Sleeves: Flexible, preprinted, color-coded, acrylic bands sized to suit the diameter of the line it identifies and arranged to stay in place by pre-tensioned gripping action when placed in position.

D. Colored Adhesive Tape: Self-adhesive vinyl tape not less than 3 mils thick by 1 to 2 inches wide.

E. Underground Line Warning Tape: Permanent, bright-colored, continuous-printed, vinyl tape not less than 6 inches wide by 4 mils thick, compounded for permanent direct-burial service, and embedded continuous metallic strip or core.

F. Printed Legend: Indicates type of underground line.

G. Tape Markers: Vinyl or vinyl-cloth, self-adhesive, wraparound type with preprinted numbers and letters.

H. Plasticized Card Stock Tags: Vinyl cloth with preprinted and field-printed legends. White background, except as otherwise indicated, with eyelet for fastener.

I. Brass Tags: Metal tags with stamped legend, punched for fastener, 2 inches by 2 inches by 0.05-inch thick.

2.3 ENGRAVED NAMEPLATES AND SIGNS

A. Engraving Stock: Melamine plastic laminate, 1/16-inch minimum thick for signs up to 20 square inches or 8 inches in length; 1/8-inch thick for larger sizes:

1. Engraved Legend:
   a. White letters on red face for 480/277VAC systems.
   b. White letters on black face for 208/120VAC systems.

2. Punched for mechanical fasteners.

B. Baked-Enamel Signs for Interior Use: Preprinted aluminum signs, punched for fasteners, with colors, legend and size as indicated or as otherwise required for the application. 1/4-inch grommets in corners for mounting.

C. Exterior, Metal-Backed, Butyrate Signs: Weather-resistant, non-fading, preprinted, cellulose acetate butyrate signs with 0.0396-inch galvanized steel backing, with colors, legend and size appropriate to the application. 1/4-inch grommets in corners for mounting.

D. Fasteners for Plastic-Laminated and Metal Signs: Self-tapping stainless steel screws or No. 10/32 stainless steel machine screws with nuts and flat and lock washers.

2.4 ARC FLASH PROTECTION LABELS

A. Engraving Stock: Melamine plastic laminate, 1/16-inch minimum thick for signs up to 20 square inches or 8 inches in length; 1/8-inch thick for larger sizes:

1. Engraved Legend:
   a. Black letters on yellow face

2.5 MISCELLANEOUS IDENTIFICATION PRODUCTS

A. Cable Ties: Fungus-inert, self-extinguishing, one-piece, self-locking, type 6/6 nylon cable ties with 3/16-inch minimum width; 50 lb minimum tensile strength; minus 40 to plus 185 degree F temperature range; and color as indicated where used for color-coding.

B. Paint: Alkyd-urethane enamel over primer as recommended by enamel manufacturer.

PART 3 - EXECUTION

3.1 INSTALLATION

A. Install identification devices according to manufacturer's written instructions. Install labels where indicated and at locations for best convenience of viewing without interference with operation and maintenance of equipment.

B. Lettering, Colors, and Graphics: Coordinate names, abbreviations, colors, and other designations used for electrical identification with corresponding designations used in the contract documents or required by codes and standards. Use consistent designations throughout the project.

C. Sequence of Work: Where identification is to be applied to surfaces that require finish, install identification after completion of finish work.

D. Self-Adhesive Identification Products: Clean surfaces of dust, loose material, and oily films before applying.

E. Painted Identification: Install painted identification as follows:

1. Clean surfaces of dust, loose material, and oily films before painting.
2. Prime surfaces. For galvanized metal use single-component, acrylic vehicle coating formulated for galvanized surfaces. For concrete masonry units use heavy-duty, acrylic-resin block filler. For concrete surfaces use clear, alkali-resistant, alkyd binder-type sealer.
3. Apply one intermediate and one finish coat of silicone alkyd enamel.
4. Apply primer and finish materials according to manufacturer's instructions.

F. Raceway Identification: Identify raceways with color banding and lettering appropriately sized for conduit. Band exposed and accessible raceways of the systems listed below for identification:

1. Bands: Pre-tensioned, snaparound, colored plastic sleeves; colored adhesive tape; or a combination of both. Make each color band 2 inches wide, completely encircling conduit, and place adjacent bands of 2-color markings in contact, side-by-side.

2. Locate bands at changes in direction, at penetrations of walls and floors, at 50-foot maximum intervals in straight runs, and at 25 feet in congested areas.
3. Colors: As follows:

   a. Security system - blue and yellow banding only, no lettering.
   b. Mechanical and electrical supervisory direct digital control system - green and blue.
   c. Telecommunications system - green and yellow.

G. Circuit Box Identification Labels: Install circuit identification labels on boxes. Label externally as follows:

1. Exposed Boxes: Pressure-sensitive, self-adhesive plastic label on cover, as well as "permanent magic marker" on inside cover.
2. Concealed Boxes: Plasticized card stock tags, as well as "permanent magic marker" on inside cover.
3. Labeling Legend: Permanent, waterproof listing of panel and circuit number or equivalent.
4. Underground Electrical Line Paths: During trench backfilling, for exterior underground power, control, signal and communications lines, install continuous underground warning tape located directly above line at 6 to 8 inches below finished grade. Where multiple lines installed in a common trench or concrete envelope, do not exceed an overall width of 16 inches, use a single line marker. Install warning tape for underground wiring, both direct buried and in raceway.
5. Panelboards, disconnects, and electrical switching equipment shall be labeled with two separate labels. An equipment identification label, and an arc fault protection label as shown below:

PANEL MDPE
208/120 VAC
3 PHASE - 4 WIRE

Diagram 3.1 - Example Equipment Identification

ARC FLASH PROTECTION
5000 AIC
RISK CATEGORY 1

Diagram 3.2 - Example Arc Flash Warning Label

6. All labeling shall be coordinated with the COTR

H. Power Circuit Identification: Use metal tags for cables, power feeders in pull boxes, junction boxes, handholes, and switchboard rooms:

1. Legend: 1/4-inch steel letter and number stamping or embossing with legend corresponding to indicated circuit designations and conductor size.
2. Fasten tags with nylon cable ties; fasten bands using integral ears.

I. Conductor Identification: Apply identification to conductors as follows:

1. Conduits and Conductors to be extended in the Future: Indicate source and circuit numbers.
2. Color-Code Conductors: The following field-applied color-coding methods may be used in lieu of factory-coded wire listed in Section 26 05 19, "Low-Voltage Electrical Power Conductors and Cables", for sizes larger than No. 4 AWG. Contractor shall demonstrate non-availability of factory-colored wire before using this application:

    a. Colored, pressure-sensitive plastic tape in half-lapped turns for a distance of 6 inches from terminal points and in boxes where splices or taps are made. apply the last 2 turns of tape with no tension to prevent possible unwinding. Use 1-inch wide tape in colors as specified. Adjust tape bands to avoid obscuring cable identification markings.
    b. Where conductors are color-coded by this method, they shall be color-coded in accessible raceways, panelboards, outlets, and switches, as well as at all terminations. Conductors in accessible raceways shall be color-coded so that by removing or opening any cover, the coding will be visible.
    c. Phase, ground, and neutral conductors shall be color-coded in accordance with Section 26 05 19, "Low-Voltage Electrical Power Conductors and Cables."
    d. Green insulated conductors shall not be re-identified for purposes other than grounding.
    e. White or neutral gray conductors shall not be re-identified for purposes other than grounded neutrals.

3. Multiple Power or Lighting Circuits in Same Enclosure: Identify each conductor with source, voltage, circuit number and phase. Use color-coding for voltage and phase indication of secondary circuit.
4. Multiple Control and Communication Circuits in Same Enclosure: Identify each conductor by its system and circuit designation at enclosure and terminations. Use a consistent system of tags, color-coding or cable marking tape.
5. Warning, Caution, and Instruction Signs: Install warning, caution, and instruction signs where indicated or required to ensure safe operation and maintenance of electrical systems and of items to which they connect. Install engraved, plastic-laminated instruction signs with approved legend where instructions or explanations are needed for system or equipment operation. Install butyrate signs with metal backing for outdoor items.
6. Emergency-Operating Signs: Install engraved laminate signs with white legend on red background with minimum 3/8-inch high lettering for emergency instructions on power transfer and other emergency operations.
7. Equipment Identification: Apply equipment identification labels of engraved plastic laminate on each major unit of equipment, including central or master unit of each system. This includes communication, signal and alarm systems, unless units are specified with their own self-explanatory identification. Provide equipment, required under Division 26 with nameplate indicating equipment name, system voltage(s) and

phase. Except as otherwise indicated, provide a single line of text with 1/2-inch high lettering on 1 1/2-inch high label; where 2 lines of text are required, use larger 2-inch high label. Apply labels for each unit of the following categories of equipment.

a. Panelboards, electrical cabinets and enclosures.
b. Power transfer equipment.
c. Contactors.
d. Remote-controlled switches.
e. Control devices.
f. Inverters.
g. Rectifiers.
h. Battery racks.
i. Power-generating units.

J. Conduit Labeling: Label conduit at each end and at pull boxes with characters a minimum 1/4-inch high.

K. Other Components Labeling: Apply identification labels of engraved plastic laminate for disconnect switches, breakers, push buttons, pilot lights, motor control centers, and similar items for power distribution control components above, except panelboards, and alarm/signal components where labeling is specified elsewhere. For panelboards, provide framed, typed circuit schedules with explicit description and identification of items controlled by each individual breaker. Install labels at locations indicated and at locations for best convenience of viewing without interference with operation and maintenance of equipment.

END OF SECTION 26 05 53

SECTION 26 28 16 - ENCLOSED SWITCHES AND CIRCUIT BREAKERS

PART 1 - GENERAL

1.1 SUMMARY

A. This Section includes individually mounted switches and circuit breakers used for feeder and equipment disconnect switches; feeder overcurrent protection; motor disconnect switches; and enclosed circuit breakers.

1.2 REFERENCES

A. The publications listed below form a part of this Specification to the extent referenced. The publications listed below are referenced as the latest edition published as of the date of this document. The publications are referred to within the text by the basic designation only.

B. Federal Standards (FS)

1. FS WC-375 Circuit Breakers, Molded Case, Branch Circuit and Service

C. National Fire Protection Association (NFPA)

1. NFPA 70 National Electrical Code

D. International Electrical Testing Association (NETA)

1. NETA ATS Acceptance Testing Specifications for Electric Power Distribution Equipment and Systems

E. National Electrical Manufacturers Association (NEMA)

1. NEMA AB1 Molded Case Circuit Breakers and Molded Case Switches
2. NEMA KS1 Enclosed and Miscellaneous Distribution Equipment Switches (600 Volts Maximum)

F. Occupational Safety and Health Administration (OSHA)

1. 29 CFR 1910.7 Definitions and Requirements for a Nationally Recognized Testing Laboratory (NRTL)

G. Underwriters Laboratories (UL)

1. UL 486A Wire Connectors and Soldering Lugs for Use with Copper Conductors

1.3 SUBMITTALS

The following shall be submitted in accordance with 013300 SUBMITTAL PROCEDURES:

A. Product Data

1. Switches
2. Circuit Breakers
3. Other specified accessories
4. Include descriptive data and time-current curves; let-through current curves for circuit breakers with current-limiting characteristics. Coordinate charts and tables and related data.

B. Test Reports

1. Field Testing
2. Field test reports indicating and interpreting test results.

C. Certificates

1. Firms and Persons Qualifications
2. Qualification data for firms and persons specified in the "Quality Assurance" article to demonstrate their capabilities and experience. Include lists of completed projects with project names and addresses, names and addresses of architects and owners, and other information specified.

1.4 QUALITY ASSURANCE

A. Comply with NFPA 70 for components and installation.

B. Testing Agency Qualifications: Independent testing agency shall meet 29 CFR 1910.7 criteria for accreditation of testing laboratories, or shall be a full-member company of the International Electrical Testing Association (NETA).

C. Testing Agency's Field Supervisor: Person currently certified by NETA or the National Institute for Certification in Engineering Technologies, to supervise on-site testing specified in PART 3.

D. Source Limitations: Obtain disconnect switches and circuit breakers from one source and by a single manufacturer.

E. Listed and Labeled: Provide disconnect switches and circuit breakers specified in this Section that are listed and labeled. The terms "Listed" and "Labeled" are as defined in NFPA 70, Article 100.

F. Listing and Labeling Agency Qualifications: A NRTL as defined in 29 CFR 1910.7.

G. Single Source Responsibility: All enclosed switches and circuit breakers shall be product of a single manufacturer and shall be coordinated with Section 26 00 01, “General Provisions for Government-Furnished Equipment (GFE).”

H. Available Fault Current: All provided gear from this Section shall be suitable for the available fault current in the area of use.

PART 2 PRODUCTS

2.1 DISCONNECT SWITCHES

A. Switches shall be of the voltage and current ratings indicated on the drawings, and each shall be capable of interrupting the locked rotor current of the motor for which it is to be used. The locked rotor current will be assumed to be 10 times the full rated load current. Switches shall be the quick-make, quick-break type. Except for ground lugs which shall be bonded to the housing, parts shall be mounted on insulating bases to permit replacement of any part from the front of the switch. All current carrying parts shall be of high conductivity copper unless otherwise specified, and shall be designed to carry rated current without excessive heating. Switch contacts shall be silver tungsten or plated to minimize corrosion, pitting and oxidation and to assure suitable conductivity.

B. Enclosed, Non-Fusible Switch: NEMA KS1, type HD, lockable handle, with 2 padlocks.

C. Enclosed, Fusible Switch, Below 800 Amperes: NEMA KS1, type HD, clips to accommodate specified fuses, enclosure consistent with environment where located, handle lockable with 2 padlocks, and interlocked with cover in CLOSED position. Provide rejection type fuse clips with switches.

D. Spare Fuses: Provide 2 sets of spare fuses for each fusible device.

E. Enclosures: NEMA KS1, type 1, unless otherwise specified or required to meet environmental conditions of installed location.

1. Outdoor Locations: Type 4X.
2. Other Wet or Damp Indoor Locations: Type 4.

F. Auxiliary Contact for Variable Frequency Drive Equipment: One normally open, one normally closed (where applicable).

2.2 ENCLOSED CIRCUIT BREAKERS

A. Enclosed, Molded-Case Circuit Breaker: NEMA AB1, lockable handle, with 2 padlocks complying with FS WC-375.

B. Characteristics: Interrupting rating, frame size, trip rating, number of poles, and auxiliary devices as indicated. Circuit breakers shall have a quick-make and quick-break toggle mechanism, inverse-time trip characteristics and shall be trip-free on overload or short-circuit. Automatic release shall be secured by bi-metallic thermal element releasing the mechanism latch. a magnetic armature shall be provided to trip the breaker instantaneously for short-circuit currents above the overload range. Automatic tripping shall be indicated by a handle position between the manual OFF and ON positions.

C. Interchangeable Trips: Circuit breakers, 200 amperes and larger, with trip units interchangeable within frame size.

D. Field-Adjustable Trips: Circuit breakers, 400 amperes and larger, with adjustable, short-time and continuous-current settings.

E. Molded-Case Switch: Where indicated, molded-case circuit breaker without trip units.

F. Lugs: Mechanical lugs and power-distribution connectors for number, size, and material of conductors indicated.

G. Shunt Trip: Where indicated. 120 volts, 60 Hz.

H. Accessories: As indicated.

I. Enclosure: NEMA AB1, type 1, unless otherwise specified or required to meet environmental conditions of installed location.

1. Outdoor Locations: Type 4X.
2. Other Wet or Damp Indoor Locations: Type 4.

J. Motor Disconnect: Provide each motor with a disconnecting means and a manually operated switch as shown on the drawings or when required by NFPA 70.

K. Single Phase Motors: Provide a single-pole or double-pole toggle switch, rated only for AC, for motor capacities less than 30 amperes, providing that the ampere rating of the switch is at least 125 percent of the motor rating. Switches shall disconnect all ungrounded conductors.

PART 3 EXECUTION

3.1 INSTALLATION

A. Install disconnect switches and circuit breakers in locations as indicated, according to manufacturer's written instructions. Install disconnect switches and circuit breakers level and plumb. Install wiring between disconnect switches, circuit breakers, control and indication devices. Connect disconnect switches and circuit breakers and components to wiring system and to ground as indicated and instructed by manufacturer. Tighten electrical connectors and terminals according to manufacturer's published torque-tightening values. Where manufacturer's torque values are not indicated, use those specified in UL 486A. Identify each disconnect switch and circuit breaker according to requirements specified in Section 26 05 53, “Identification for Electrical Systems.”

3.2 FIELD QUALITY CONTROL

A. Testing: After installing disconnect switches and circuit breakers and after electrical circuitry has been energized, demonstrate product capability and compliance with requirements.

B. Procedures: Perform each visual and mechanical inspection and electrical test stated in NETA ATS, for disconnect switches and for molded-case circuit breakers. Certify compliance with test parameters. Correct malfunctioning units on-site, where possible, and retest to demonstrate compliance; otherwise, remove and replace with new units and retest.

3.3 ADJUSTING

A. Set field-adjustable disconnect switches and circuit-breaker trip ranges as indicated in the short circuit coordination study.

3.4 CLEANING

A. After completing system installation, including outlet fittings and devices, inspect exposed finish. Remove burrs, dirt, and construction debris and repair damaged finish including chips, scratches, and abrasions.

END OF SECTION 26 28 16

SECTION 26 33 53 - STATIC UNINTERRUPTIBLE POWER SUPPLY (GFE)

PART 1 - GENERAL

1.1 SUMMARY

A. This Section includes the installation requirements for Government Furnished Equipment (GFE) 480 V, 3-phase, 3-wire input, 480-V, 3-phase, 3-wire output, 60 Hertz, on-line, static-type, uninterruptible power supply systems (UPS), including rectifier/battery charger; battery circuit breaker in UPS module; battery bank with disconnect switch (one for each module); solid-state inverter; UPS monitoring system complete with microprocessor sensors and wiring; input and output terminal blocks; and indicating instruments and enclosures. The Contractor shall be responsible for receiving this equipment on site, proper storage prior to installation, setting in place, and anchoring of this equipment. The Contractor is responsible for installation, termination and final connection of power feeders and control wiring associated with the installation of this equipment.

1.2 REFERENCE STANDARDS

A. The publications listed below form a part of this Specification to the extent referenced. The publications listed below are referenced as the latest edition published as of the date of this document. The publications are referred to within the text by the basic designation only.

B. FAA Orders and Standards:
   1. FAA Order 6980.29, Maintenance of Static Uninterruptible Power Supplies
   2. FAA Order 6980.25c, Maintenance of Batteries for Standby Power
   3. FAA-STD-1217f, Electrical Work, Interior

C. National Fire Protection Association (NFPA)

   1. NFPA 70 National Electrical Code

D. Underwriters Laboratories (UL)

   1. UL 486A Wire Connectors and Soldering Lugs for Use with Copper Conductors

1.3 SUBMITTALS

A. The following shall be submitted in accordance with Section 01 33 00, “Submittal Procedures.”

B. Shop Drawings: The Government shall provide to the Contractor a completed and approved shop drawing of the actual equipment that will be provided. Upon receipt of the equipment on site, the Contractor shall verify that accuracy of the drawings and report any discrepancies to the Contracting Officer's Technical Representative.

C. Installation Drawings: Detailed drawings of the anchoring of this equipment and the physical location of the conduits stubbing into this equipment from below and above shall be provided

for approval prior to the installation. These drawings shall be based on, and shall be fully coordinated with, the approved Shop Drawing provided to the Contractor by the Government.

1.4 QUALITY ASSURANCE

A. Regulatory Requirements: Perform work to meet or exceed the requirements of NFPA 70 and other applicable statutes, ordinances, codes, and regulations of governmental authorities having jurisdiction. Notify the Contracting Officer's Technical Representative of known or probable code violations discovered during contractor performance. Do not proceed with the work until violations have been resolved.

PART 2 - PRODUCTS

2.1 GFE UPS SYSTEMS

A. This equipment will be furnished by the Government. The Contractor is responsible for receiving this equipment on site, storage of this equipment prior to installation, setting in place, and anchoring of this equipment. Power feeders, all power wiring and all control wiring which are to be terminated within this equipment shall be installed and terminated by the Contractor. The Contractor is responsible for final connection of all power feeders within this equipment and final connection of all power wiring and all control wiring associated with this equipment. The Contractor is responsible for the coordination of work, to include proper sizing of equipment housekeeping pads and locations of power and control wiring termination points within the equipment. Coordinate with Government furnished shop drawings of this equipment.

2.2 TERMINATION LUGS

A. Provide termination lugs as required to facilitate the termination of power conductors and control wiring within this equipment. Comply with UL 486A.

PART 3 - EXECUTION

3.1 INSTALLATION

A. Anchor the UPS to the floor using the mounting brackets that anchor the UPS during shipping, conform to Section 26 05 48, “Vibration and Seismic Controls for Electrical Systems”. Provide anchorage according to manufacturer's written instructions, unless otherwise indicated. Maintain minimum working space at equipment according to manufacturer's shop drawings and NFPA 70.

B. Connections: Interconnect system components. Make connections to supply and load circuits according to manufacturer's wiring diagrams and as indicated. All power and control wiring connections to this equipment are the responsibility of the Contractor.

3.2 IDENTIFICATION

A. Identify components according to Section 26 05 53, "Identification for Electrical Systems." Label each individual battery cell. Coordinate with the Contracting Office Representative.

3.3 FIELD QUALITY CONTROL AND DEMONSTRATION

A. The Contractor shall have a representative on site during the Government's acceptance testing and demonstration of this equipment to witness the proceedings. Anchoring, conduit installation, wiring termination, or any other portion of the installation of this equipment that is deemed improper by the Contracting Officer's Technical Representative in conjunction with the equipment's manufacturing representative shall be corrected by the Contractor at no additional expense to the Government. Adjusting, programming, and actual testing shall be performed by the manufacturer's representative in conjunction with the Contracting Officer's Technical Representative. Contractor has no responsibility for their tests other than to witness them. System functions shall be pre-tested, including operations, and protective features. Adjust to ensure operation complies with specifications. Load the system using a variable load bank simulating kVA, kW, and power factor for which unit is rated.

B. Additional Tests:

1. Simulation of malfunctions to verify protective device operation.
2. Tests of duration of supply on emergency, demonstrations of low-battery voltage shutdown, and transfers due to normal source failure and restoration.
3. Tests of harmonic content of input and output current under 25 percent, 50 percent, and 100 percent of rated load.
4. Tests of voltage output under specified transient-load conditions.
5. Tests of efficiency at 50 percent, 75 percent, and 100 percent rated load.
6. Functional tests of remote status and alarm panel.
7. Functional tests of battery-monitoring system.
8. Voltage input and output test for Total Harmonic Distortion(THD)

C. Test Failures and Installation Deficiencies: Correct deficiencies identified by tests and prepare for retest. Manufacturer's representative and Contracting Officer's Technical Representative shall retest equipment after corrections are made until specified requirements are met.

D. Start-up Services: The Contracting Officer's Technical Representative shall arrange for a factory-authorized services representative to provide start-up and training to demonstrate UPS Systems, and train the Government's maintenance personnel. The Contractor is responsible for scheduling the start-up and training and shall notify the Contracting Officer's Technical Representative 21 calendar days in advance of these dates.

3.4 COMMISSIONING

A. Battery Charging

B. Charge the battery cells according to manufacturer's instructions. Record individual cell voltages. Coordinate this work with the manufacturer's representative and Contracting Officer's Technical Representative.

END OF SECTION 26 33 53

SECTION 26 33 54 – RESISTIVE LOAD BANK FOR UNINTERRUPTIBLE POWER SUPPLY (UPS)

PART 1 - GENERAL

1.1 SUMMARY

A. This Section includes installation and testing requirements for an outdoor weatherproof resistive load bank for UPS maintenance load testing.

1.2 REFERENCES

A. The publications listed below form a part of this Specification to the extent referenced. The publications listed below are referenced as the latest edition published as of the date of this document. The publications are referred to within the text by the basic designation only.

B. National Fire Protection Association (NFPA)

1. NFPA 70 National Electrical Code

1.3 SUBMITTALS

A. The following shall be submitted in accordance with Section 01 33 00, "Submittal Procedures."

B. Shop Drawings: Show details of fabrication, wiring, and installation of field-installed portions of system. Include general arrangement drawings showing locations of auxiliary components in relation to the load bank, and wiring connections between the load bank and auxiliary equipment. Show connections, mounting, and support provisions and access and workspace requirements.

C. Wiring Diagrams: Show detail of power and control connections differentiating between factory-installed and field installed wiring.

D. Field Test and Observation Reports: Indicate and interpret test results for compliance with performance requirements.

1.4 QUALITY ASSURANCE

A. Testing Agency Qualifications: An independent testing agency with the experience and capability to conduct testing. Comply with NFPA 70.

PART 2 - PRODUCTS

2.1 MANUFACTURERS

A. Simplex Stationary UPS load bank, 480-volt, 3-phase 60 Hz, 20 kW x 4 load step resolution; (GFE) with remote control panel.

B. Construction: The enclosure constructed of heavy gauge aluminized steel. A fixed, weatherproof, louver provided on the exhaust opening. Permanent base with built-in forklift channels designed for outdoor mounting on a concrete pad.

C. Resistor Elements: Constructed of corrosion resistant chromium alloy wire.

D. Control Power: 120-volt, single-phase, 60 HZ.

E. Remote Control Panel: Includes controls and status indicators in separate NEMA-1 enclosure for remote operation. Remote control panel shall be located in the facility UPS room. Provide power ON-OFF switch; control power light; blower ON-OFF push buttons; blower power light; air fail light; master load ON-OFF switch; and individual load step ON-OFF toggle switches.

F. Digital Metering Option: True RMS digital meter to measure voltage, current, frequency, and kW load.

G. Cooling: Air cooled by an integral blower motor (480-volt, 3-phase, 60 HZ to match UPS input load connection). Blower motor shall be wired to receive power from the UPS load input connection. Load bank shall be suitable for operation with no cool down period when load is removed.

H. Protection: Integral branch circuit fusing on all load steps and blower motor circuit protection. Over-temperature protection for fail safe operation including a differential pressure air switch interlocked with the unit's blower motor to remove load if the airflow is not sufficient to provide proper cooling.

PART 3 - EXECUTION

3.1 GENERAL

A. Comply with the manufacturer's requirements.

3.2 INSTALLATION

A. Install power and control conduits and conductors as required by the manufacturer's installation instructions.

B. Maintain 8-foot clearance intake and outtake air flows and 30-foot clearance of flammable materials according to manufacturer's instructions. See load bank reference materials for more information.

C. Mount separate remote control panel inside UPS shelter, provide conduit and conductors to provide a complete and operational load bank system.

D. Provide and install a NEMA 4x, 200amp, non-fused disconnect for UPS load bank power disconnect.

3.3 IDENTIFICATION

A. Identify system components according to requirement of Section 26 05 53, "Identification for Electrical Systems."

3.4 FIELD QUALITY CONTROL

A. The load bank shall be fully tested in accordance with manufacturer's testing specification. Tests shall include electrical functional testing, verifying conformance to assembly drawings and specifications. The load bank shall have each load step tested at full rated voltage. Load data must be recorded and made available to the Contracting Officer's Technical Representative.

3.5 DEMONSTRATION

A. Arrange for a factory-authorized service representative to provide a training session to demonstrate the load bank, and train the Government's maintenance personnel. The training session shall include both classroom training and hands-on experience in safety precautions, equipment operation, and maintenance procedures, including:

1. Instruction in function, operation, and maintenance of each component.
2. Instruction in each distinct procedure and schedule related to servicing and preventative maintenance.
3. Schedule training with the Contracting Officer's Technical Representative with at least 7 days advanced notice.

END OF SECTION 26 33 54

SECTION 31 23 00- EXCAVATION AND FILL

PART 1 - GENERAL

1.1 SUMMARY: This section covers the requirements of general site work, consisting of excavation, trenching, backfilling, compacting, soil stabilization, grading, graveling, and clean-up.

1.2 SCOPE: Perform trenching for the direct buried conduits as indicated on the contract drawings. Restore grading with a bulldozer or other approved equipment at the site as directed by the COTR.

1.3 APPLICABLE DOCUMENTS: The following publications of the issues in effect on the date of this solicitation form a part of this section to the extent referenced.

A. American Society for Testing and Materials (ASTM):

D 2922-81 Test Methods for Density of Soil and Soil- Aggregate in Place by Nuclear Methods (Shallow Depth)

PART 2 - MATERIALS AND EQUIPMENT

2.1 MATERIALS

A. Site Materials: Trench backfill material shall be sand and stone-free earth as specified hereinafter and shall be in accordance with Specifications Section 16-3 Electrical Work, Exterior.

B. Fill Materials: All fill material shall be free from organic matter, debris, vegetation and other deleterious substances. It shall be of a quality suitable for the purpose intended and shall compact thoroughly without the presence of excessive voids when watered and compacted. Fill shall be non-expansive in nature.

PART 3 - EXECUTION

3.1 Trenching:

A. Underground cable and utility trenches shall be excavated where shown on the drawings. Trenches shall be excavated to a depth as indicated on the drawings.

B. All underground cable trenching shall conform to Specifications Section 16-3.

C. All trenches shall run as indicated and shall be the depth indicated on the drawings.

D. Cable, conduit, or pipes shall not vary more than four (4) inches either side of the straight line layout.

3.2 Over Excavation:

A. Where excavation is carried to a depth greater than required, backfilling shall be subject to approval by the COTR and shall be compacted as required.

3.3 Wet Excavation:

A. No additional compensation will be allowed for any sheeting, shoring, pumping, or draining required to place and keep excavations in dry condition for construction.

B. No water shall be allowed to remain in or around any part of the work.

3.4 Existing Facilities:

A. Contact local utility companies and government public works offices prior to the start of any excavation.

B. Prior to any excavation or trenching, utilize a cable detector to verify and locate any utilities and cable runs which may be in the vicinity of site work or crossed by the new cable runs.

C. The existing utilities and cable runs shall be exposed by hand digging in these areas and shall be protected from any possible damage.

D. Any damage caused by the contractor shall be immediately repaired with materials and methods approved by the COTR at no additional cost to the Government.

3.5 Trench Backfill and Fill:

A. Layers shall not exceed loose depths of 8 inches as specified in FAA-C-1391b. Each layer shall be properly moistened and compacted, as specified herein, by power operated mechanical equipment. Where utilities are not shown to be concrete encased, the first layer of backfill shall be 3 inches sand, with no particles over 1/4 inch diameter.

3.6 Plastic Marking Tape:

A. Plastic marking tape for identifying and locating underground utilities shall be acid and alkali resistant polyethylene film, 6 inches wide and 0.004 inch thick. Tape shall have foil backing to enable detection by metal detector at a depth of 3 feet. All utility lines shall be marked with a printed inscription and color as follows:

RED	ELECTRIC
YELLOW	FUEL
ORANGE	COMMUNICATIONS
BLUE	WATER
GREEN	SEWER

3.7 Aggregate Base: (Not Used)

3.8 Compaction: All loose or disturbed soil shall be compacted in place by approved compaction equipment with a minimum of four complete passes over the entire area.

3.9 Grading: Grade site areas to the lines and grades indicated on the drawings or as directed. Slope graded areas approximately 2% for drainage away from the structures and site area. Areas within

the limit of grading shall be finish graded to fill ruts, holes, etc., and to remove surface rocks or boulders.

3.10 Pavement Replacement: Contractor shall conform to Massport standards if the existing runway "Romeo" pavement is damaged. Contractor is responsible to bring all areas disturbed during construction back to the original condition. .

3.11 Pavement Removal: (Not Used)

3.12 ENVIRONMENTAL CONSIDERATIONS.

A. General. - All construction operations shall be conducted in such a manner as to prevent the pollution to air, water or land, and shall, within reasonable limits control noise and the disposal of solid waste material, as well as other pollutants.

B. Protection of water resources. - The Contractor shall control the disposal of fuels, oils, bitumens, calcium chloride, acids or harmful materials, both on and off the premises and shall comply with applicable Federal, State, County and Municipal laws concerning pollution of rivers and streams while performing work under this contract. Special measures shall be taken to prevent chemicals, fuels, oils, greases, bituminous materials, herbicides and insecticides, and surface drainage from entering public waters. Water used in on-site material processing, concrete curing, foundation and concrete cleanup, and other waste waters shall not be allowed to re-enter a stream if an increase in the turbidity of the stream could result therefrom.

3.13 Dust control. - The Contractor shall maintain all excavations, embankments, stockpiles, access roads, plant sites, waste areas, borrow areas, and all other work areas free from excess dust to such reasonable degree as to avoid causing a hazard or nuisance to the Using Service or to others. Approved temporary methods consisting of sprinkling, chemical treatment, or similar methods will be permitted to control dust. Dust control shall be performed as the work proceeds and whenever a dust nuisance or hazard occurs.

3.14 Erosion control. - Surface drainage from cuts and fills within the construction limits, whether or not completed, and from borrow and waste disposal areas, shall be graded to control erosion within acceptable limits. Temporary control measures shall be provided and maintained until permanent drainage facilities are completed and operative. The area of bare soil exposed at any one time by construction operations should be held to a minimum.

3.15 Post-construction cleanup or obliteration. - The Contractor shall obliterate all signs of temporary construction facilities such as haul roads, work areas, structures, foundations of temporary structures, stockpiles of excess or waste materials, and other vestiges of construction prior to final acceptance of the work. These disturbed areas shall be graded and filled and the areas seeded unless otherwise noted on the drawings.

3.16 QUALITY ASSURANCE:

A. When excavations are completed, the contractor shall notify the COTR for his inspection and approval prior to placement of concrete or installation of cables, ducts, conduits, or piping.

END OF SECTION 31 23 00

DEPARTMENT
OF
TRANSPORTATION

AIRPORT SURVEILLANCE RADAR - 9 (ASR-9)
LOGAN INTERNATIONAL AIRPORT
UPS REPLACEMENT
BOSTON, MA.

FEDERAL
AVIATION
ADMINISTRATION

DEPARTMENT OF TRANSPORTATION
FEDERAL AVIATION ADMINISTRATION
ATO - TECHNICAL OPERATIONS **EASTERN SERVICE AREA**

ASR

POWER SYSTEM ENHANCEMENT
UPS & E/G INSTALLATION
COVER SHEET

BOSTON LOGAN INTERNATIONAL AIRPORT MA

SUBMITTED BY: D.HULL, PROJECT ENGINEER
APPROVED BY: G.NEVILLE, MGR: ENGINEERING - BOSTON
DH / POD — ENGINEERING SERVICES INFRASTRUCTURE
03/27/2009
700006
BOS-700006-G001

ISSUED FOR: CONSTRUCTION

DRAWING LIST

DRAWING NUMBER	DRAWING TITLE
BOS-700006-G001	COVER SHEET
BOS-700006-G002	INDEX SHEET
BOS-700006-C101	AIRPORT LAYOUT DRAWING
BOS-700006-C001	SITE LAYOUT
BOS-700006-D001	ELECTRICAL POWER DEMOLITION
BOS-700006-D002	TEMPORARY UPS DEMOLITION
BOS-700006-D003	HVAC REPLACEMENT EQUIPMENT DEMOLITION
BOS-700006-E001	ELECTRICAL ONE LINE DIAGRAM
BOS-700006-E002	ELECTRICAL EQUIPMENT LAYOUT
BOS-700006-E003	ELECTRICAL E/G ROOM ELEVATIONS
BOS-700006-E004	ELECTRICAL UPS SHELTER ELEVATIONS
BOS-700006-E005	PANEL, CONDUIT & CONDUCTOR SCHEDULES
BOS-700006-E006	UPS AND E/G INTERCONNECTION DIAGRAM
BOS-700006-E008	PANEL SCHEDULES FOR REFERENCE ONLY
BOS-700006-M001	NEW HVAC EQUIPMENT INSTALLATION
BOS-700006-M002	NEW HVAC EQUIPMENT SCHEDULES

ABBREVIATIONS

GENERAL NOTES:

1. THE CONTRACTOR SHALL FURNISH AND INSTALL ALL MATERIAL UNLESS OTHERWISE INDICATED. CONTRACTOR SHALL PROVIDE ALL LABOR AND EQUIPMENT UNLESS OTHERWISE INDICATED. CONTRACTOR SHALL BE RESPONSIBLE FOR ALL PERMITS, BADGING, AND COORDINATION OF WORK, INCLUDING SCHEDULED SHUTDOWNS.
2. ALL ELECTRICAL WORK SHALL CONFORM TO THE NATIONAL ELECTRIC CODE (NEC), LOCAL REGULATIONS, AND FAA SPECIFICATIONS.
3. STRICTLY COMPLY WITH ALL OSHA REGULATIONS, AT ALL TIMES. THE COTR RESERVES THE RIGHT TO STOP THE PROJECT SHOULD AN UNSAFE CONDITION EXIST.
4. VOLTAGE AND PHASE ROTATION TESTS SHALL BE PERFORMED BEFORE AND AFTER ANY DISCONNECTION OF POWER AND SHALL BE IN THE PRESENCE OF THE COTR.
5. ALL INSULATED CONDUCTORS SHALL BE PROPERLY AND PERMANENTLY IDENTIFIED AND COLOR CODED AT EACH END, IN EACH PULL BOX, AND EVERY 3 FEET WHERE THE CONDUCTOR IS VISIBLE.
6. FLEXIBLE LIQUIDTIGHT CONDUIT SHALL BE ALL PLASTIC PVC TYPE, WITH EXTERNAL 6AWG GREEN BONDING CONDUCTOR.
7. ALL CONTROL CABLES SHALL BE TWISTED PAIR #18AWG UNLESS UNLESS OTHERWISE NOTED.
8. ALL EQUIPMENT AND CABLES SHALL BE TESTED AS REQUIRED.
9. ALL NEW CONDUITS SHALL BE CLEARED OF DEBRIS AND A PULL STRING INSTALLED.
10. INSULATION MEGGER TESTS SHALL BE PERFORMED IN THE PRESENCE OF THE COTR ON ALL NEW CONDUCTORS AND CABLES.
11. KEEP ALL RUNWAYS, TAXIWAYS, RAMP AREAS, PUBLIC AND PRIVATE ROADS FREE OF DUST, MUD, DIRT, CONSTRUCTION DEBRIS, ETC, AT ALL TIMES.
12. CONTRACTOR'S VEHICLES SHALL BE EQUIPPED WITH A ROTATING BEACON, COMPANY SIGNAGE, AND AN ORANGE AND WHITE FLAG.
13. ALL NEW EQUIPMENT SHALL BE LABELED ACCORDING TO SPECIFICATION 26 05 53 "IDENTIFICATION FOR ELECTRICAL SYSTEMS".
14. ALL EXCAVATION WORK SHALL BE HAND DUG.
15. ALL EXTERIOR AND UNDER GROUND CONDUITS SHALL BE GRSC.
16. MIDNIGHT WORK WILL BE REQUIRED FOR EACH UPS CUTOVER AND TESTING.
17. LEGALLY DISPOSE OF ALL MATERIAL AND EQUIPMENT NOT RETURNED TO OR RETAINED BY THE GOVERNMENT.
18. CONTRACTOR IS RESPONSIBLE FOR OBTAINING PROPER MASSPORT I.D. BADGES FOR ALL EMPLOYEES/ SUBCONTRACTORS PRIOR TO COMMENCING WORK. BADGES SHALL BE DISPLAYED AT ALL TIMES WHILE ON THE SITE.
19. SEE DIVISION 1 OF THE SPECIFICATION FOR REQUIRED SEQUENCE OF WORK AND CONTRACT REQUIREMENTS. THE CONTRACTOR SHALL PROVIDE AND INSTALL ALL LABOR AND MATERIALS FOR THE PROPER OPERATION OF THE UPS SYSTEM WITH THE UTILITY SERVICE, ENGINE GENERATOR, AND FACILITY LOAD.
20. IF CONDITIONS ARE DIFFERENT THAN THOSE STATED IN THE DRAWINGS AND SPECIFICATIONS THE CONTRACTOR SHALL CONTACT THE COTR PRIOR TO PROCEEDING WITH THE WORK.

GENERAL SEQUENCE OF WORK:

UPS REPLACEMENT:

THE FOLLOWING IS A BASIC INSTALLATION SCHEDULE. CONTRACTOR SHALL SUBMIT FOR APPROVAL A DETAILED SEQUENCE OF WORK. TO INCLUDE ALL MAJOR MILE STONES OF CONSTRUCTION. CONTRACTOR SHALL SUBMIT FOR APPROVAL DETAILED CUTOVER PLANS FOR EACH SCHEDULED FACILITY SHUTDOWN.

1. DELIVERY OF TEMPORARY UPS SYSTEM, TEST TO FAA STANDARDS. COTR APPROVE OF ALL TEMPORARY EQUIPMENT.
2. SCHEDULE SHUTDOWN OF ASR-9 FACILITY. CUTOVER TO TEMPORARY POWER EQUIPMENT. COTR APPROVE OF INSTALLATION.
3. RECEIVE GOVERNMENT FURNISHED MATERIALS (GFM).
4. BEGIN DEMOLITION AND INSTALLATION OF POWER SYSTEMS.
5. COMPLETE INSTALLATION OF UPS SYSTEM, AND ALL PRELIMINARY TESTING REQUIREMENTS
6. SCHEDULE SHUTDOWN OF ASR-9 FACILITY. CUTOVER TO NEW UPS POWER SYSTEM. COTR APPROVE OF INSTALLATION.
7. COMPLETE FAA REQUIRED FACILITY LOAD TESTING
8. SITE CLEAN UP.

BID ALTERNATE #1 ACU-1 AND ACU-2 REPLACEMENT:

THE FOLLOWING IS A BASIC INSTALLATION SCHEDULE. CONTRACTOR SHALL SUBMIT FOR APPROVAL A DETAILED SEQUENCE OF WORK. TO INCLUDE ALL MAJOR MILE STONES OF CONSTRUCTION. CONTRACTOR SHALL SUBMIT FOR APPROVAL DETAILED CUTOVER PLANS FOR EACH SCHEDULED FACILITY SHUTDOWN.

1. DELIVERY OF CONTRACTOR FURNISHED MATERIAL
2. REMOVE AND REPLACE ACU-1. REMOVE EXISTING HOODS, REPLACE WITH NEW STAINLESS STEEL HOODS TEST EQUIPMENT
3. COMPLETE INSTALLATION OF HVAC CONTROL SYSTEM.
4. COMPLETE FAA REQUIRED FACILITY TESTING
5. SITE CLEAN UP.

SYMBOLS LEGEND

REV	APPROVED DATE	DESCRIPTION	JCN	REDLINE DATE	APVD
	03/27/2009	CONSTRUCTION, WR #8767 (GHB)	700006	08/11/2008	

DEPARTMENT OF TRANSPORTATION
FEDERAL AVIATION ADMINISTRATION

ATO - TECHNICAL OPERATIONS **EASTERN SERVICE AREA**

ASR

POWER SYSTEM ENHANCEMENT
UPS & E/G INSTALLATION
INDEX SHEET

BOSTON LOGAN INTERNATIONAL AIRPORT MA

REVIEWED BY

SUBMITTED BY: D.HULL — PROJECT ENGINEER

APPROVED BY: G.NEVILLE — MGR: ENGINEERING - BOSTON

DESIGNED DH
DRAWN POD
CHECKED

ISSUED BY: ENGINEERING SERVICES INFRASTRUCTURE

DATE 03/27/2009 JCN 700006

DRAWING NO BOS-700006-G002 REV

ISSUED FOR: CONSTRUCTION

NOTES:

1. CONTRACTOR IS RESPONSIBLE FOR OBTAINING PROPER MASSPORT ID BADGES FOR ALL EMPLOYEES/SUBCONTRACTORS PRIOR TO COMMENCING WORK. BADGES SHALL BE DISPLAYED AT ALL TIMES. PRESENCE OF A BADGED FAA EMPLOYEE SHALL NOT CONSTITUTE AS BEING ESCORTED. ALL ESCORTING SHALL BE DONE BY THE CONTRACTOR.
2. ALL WORK INSIDE THE ASR-9 FACILITY WILL REQUIRE THE PRESENCE OF AN FAA TECHNICIAN/ENGINEER. CONTRACTOR SHALL SUBMIT A PROPOSED WORK SCHEDULE TWO WEEKS IN ADVANCE OF ANTICIPATED START DATE. SCHEDULES WILL BE APPROVED BASED UPON FAA STAFFING AVAILABILITY. DISAPPROVED SCHEDULES SHALL NOT BE GROUNDS FOR A CLAIM AGAINST THE GOVERNMENT.
3. NORMAL SITE ACCESS SHALL BE THROUGH THE NORTH GATE AND PERIMETER ROAD.

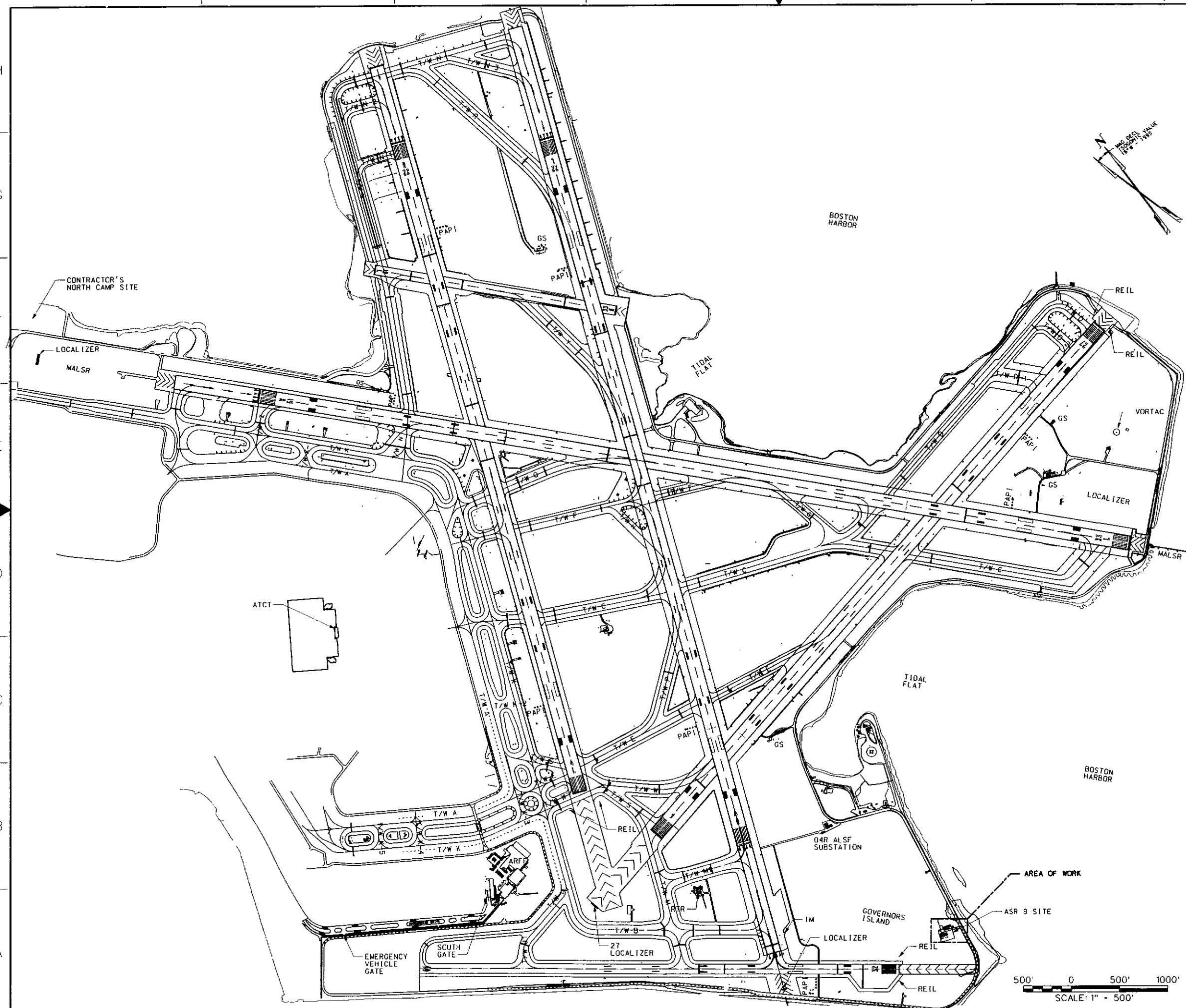

REV	APPROVED DATE	DESCRIPTION	JCN	REDLINE DATE	APVD
	03/27/2009	CONSTRUCTION, WR #8767 (GHB)	700006	08/01/2008	

DEPARTMENT OF TRANSPORTATION
FEDERAL AVIATION ADMINISTRATION
ATO - TECHNICAL OPERATIONS **EASTERN SERVICE AREA**

ASR

POWER SYSTEM ENHANCEMENT
AIRPORT LAYOUT PLAN

BOSTON — LOGAN INTERNATIONAL AIRPORT — MA

REVIEWED BY	SUBMITTED BY D.HULL	APPROVED BY G.NEVILLE
	PROJECT ENGINEER	MGR: ENGINEERING - BOSTON
DESIGNED DH	ISSUED BY ENGINEERING SERVICES INFRASTRUCTURE	DATE 03/27/2009 JCN 700006
DRAWN GHB		DRAWING NO BOS-700006-C101 REV
CHECKED		

ISSUED FOR CONSTRUCTION

EDM Acct. 700006 C-101.dwg

THIS DRAWING PRODUCED ON NEW ENGLAND REGION MICROSTATION

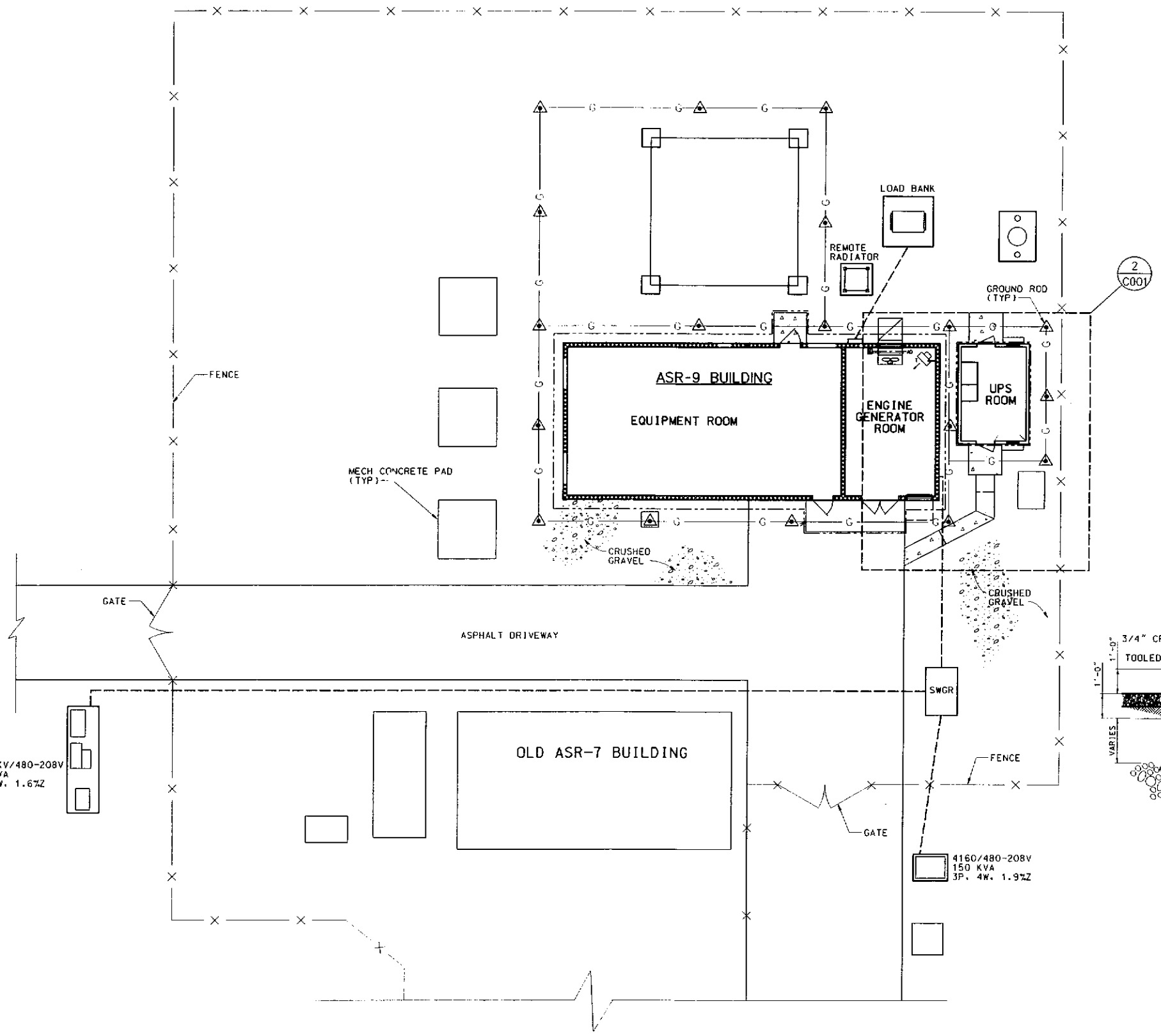

1 C001 ELECTRICAL SITE PLAN
SCALE: 1" = 10'-0"

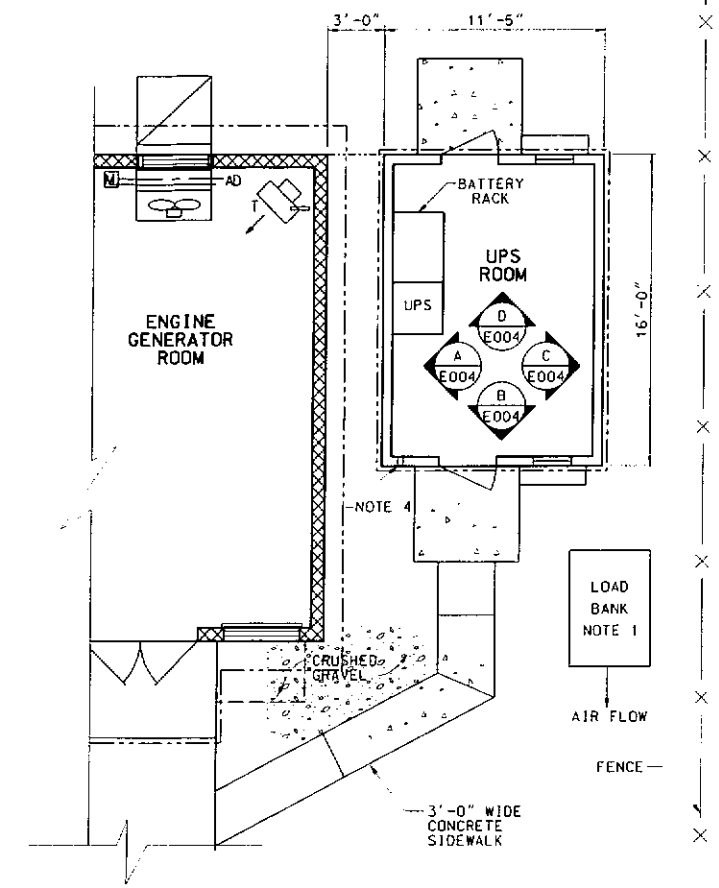

2 C001 UPS ROOM
SCALE: 1" = 20'-0"

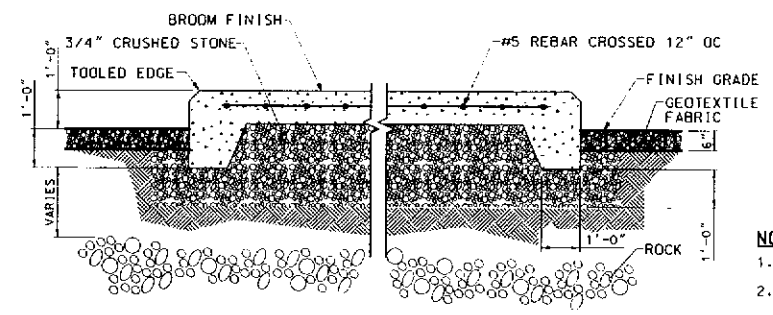

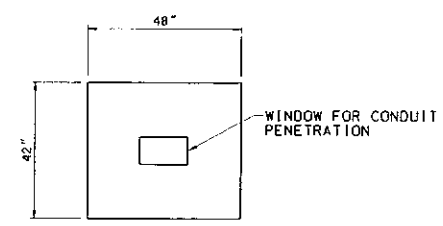

A C001 LOAD BANK PAD SECTION
NOT TO SCALE

20' 0 20' 40'
SCALE: 1" = 20'

10' 0 10' 20'
SCALE: 1" = 10'

NOTES:

1. PROVIDE PRECAST 4'X3'-6" CONCRETE LOAD BANK PAD.
2. ALL CONCRETE SHALL HAVE A MINIMUM COMPRESSIVE STRENTH OF 3000 PSI AT 28 DAYS WITH 3/4" AGGREGATE.
3. REINFORCE STEEL SHALL BE GRADE 60 AND HAVE A MINIMUM COVER OF 3 INCHES.
4. CORE (2) NEW 2 1/2" HOLES FOR LOAD BANK DISCONNECT. EXACT LOCTION SHALL BE FIELD DETERMINED AND APPROVED BY COTR.

REV	APPROVED DATE	DESCRIPTION	JCN	RECLINE DATE	APVD
	03/27/2009	CONSTRUCTION, WR #8767 (GHB)	700006	08/11/2008	

DEPARTMENT OF TRANSPORTATION
FEDERAL AVIATION ADMINISTRATION
ATO - TECHNICAL OPERATIONS **EASTERN SERVICE AREA**

ASR
POWER SYSTEM ENHANCEMENT
UPS & E/G INSTALLATION
SITE PLAN

BOSTON LOGAN INTERNATIONAL AIRPORT MA

REVIEWED BY	SUBMITTED BY	APPROVED BY
	D.HULL	G.NEVILLE
	PROJECT ENGINEER	MGR: ENGINEERING - BOSTON
	DESIGNED DH	DATE 03/27/2009 JCN 700006
	DRAWN GHB	DRAWING NO BOS-700006-C001 REV
	CHECKED	

ISSUED BY: ENGINEERING SERVICES INFRASTRUCTURE

ISSUED FOR: CONSTRUCTION

THIS DRAWING PRODUCED ON NEW ENGLAND REGION MICROSTATION SYSTEM

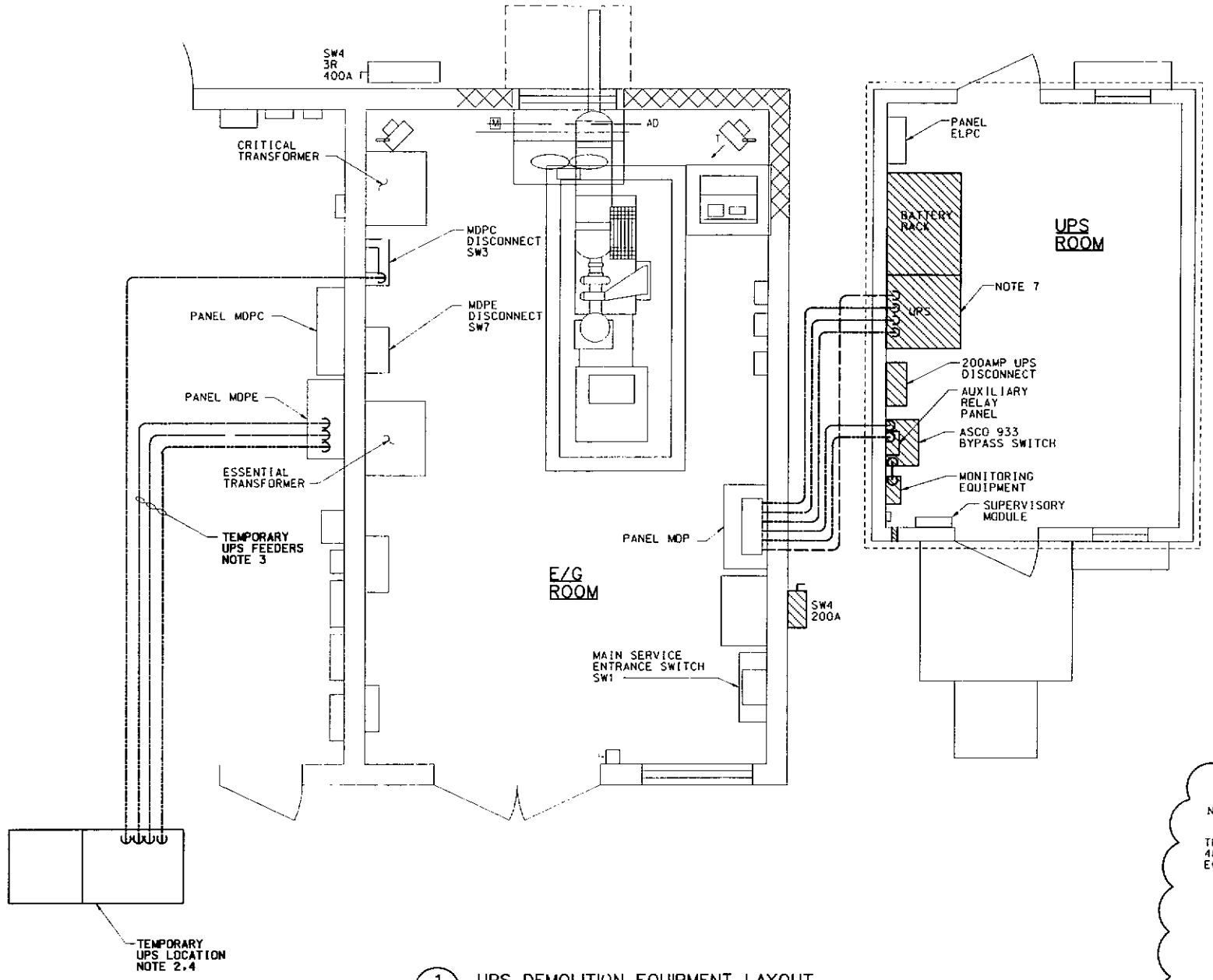

1 D001 UPS DEMOLITION EQUIPMENT LAYOUT
NOT TO SCALE

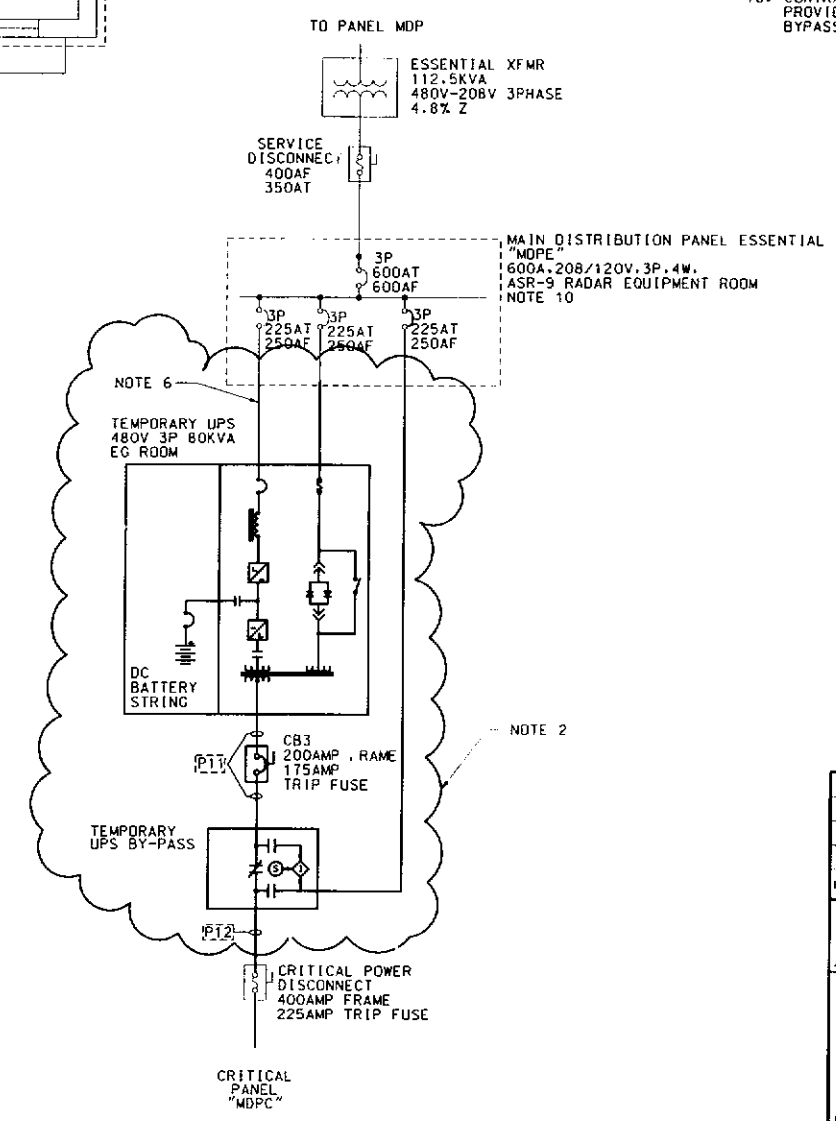

2 D001 TEMPORARY UPS ONELINE DIAGRAM
NOT TO SCALE

NOTES

1. THE ASR-9 IS AN OPERATIONAL FACILITY. UNSCHEDULED LOSS OF POWER IS UNACCEPTABLE. THE CONTRACTOR MUST COORDINATE ALL EFFORTS WITH THE COTR. PROVIDE A CUTOVER PLAN TO COTR FOR APPROVAL. DISRUPTION OF POWER SHALL ONLY BE ALLOWED AS A SCHEDULED SHUTDOWN WITH AN APPROVED PLAN. MIDNIGHT WORK WILL BE REQUIRED.
2. FAA SHALL PROVIDE 208VAC, 3PH, 4W, 80KVA TEMPORARY UPS SYSTEM, BATTERIES, OUTPUT BREAKER, AND BYPASS SWITCH. UPS WILL BE SHIPPED AS ONE TOTAL ENCLOSED SYSTEM. CONTRACTOR SHALL PROVIDE EQUIPMENT TO OFF LOAD AND TAKE DELIVERY OF TEMPORARY EQUIPMENT.
3. PROVIDE ALL TEMPORARY FEEDERS, CONDUIT, AND CONTROL WIRING REQUIRED TO INSTALL A FULLY FUNCTIONAL POWER SYSTEM.
4. UPS EQUIPMENT AND LOCATION IS FOR BID PURPOSES ONLY. CONTRACTOR SHALL SUBMIT FOR APPROVAL ALL TEMPORARY EQUIPMENT AND PROPOSED LOCATIONS.
5. REFER TO DRAWING BOS-700006-G002 FOR SUGGESTED OF SEQUENCE OF WORK.
6. PROVIDE AND INSTALL TEMPORARY CABLES. CABLES SHALL BE RATED HARD USAGE, LOCOMOTIVE TYPE, SIZED PER NEC REQUIREMENTS. SUBMIT FOR APPROVAL.
7. DEMOLITION:
   - INSTALL TEMPORARY UPS AND ASSOCIATED EQUIPMENT. TEST TEMPORARY POWER SYSTEM FOR COMPLIANCE WITH FAA ORDER 6980.29. SUBMIT RESULTS FOR FAA APPROVAL
   - REMOVE UPS, BATTERIES, BATTERY CABINET, UPS DISCONNECT SWITCH, ASCO BYPASS PANEL, AND ASSOCIATED EQUIPMENT. FOR BID PURPOSES, CONTRACTOR SHALL DISPOSE OF SYSTEM WITHIN 50 MILES OF THE AIRPORT.
   - REMOVE ALL EXISTING CRITICAL FEEDERS FROM PANEL MDP TO THE UPS AND FROM THE BYPASS SWITCH TO THE CRITICAL TRANSFORMER
   - EXISTING 8"X8" WIREWAY AND FLEXIBLE METAL CONDUIT BETWEEN BUILDINGS SHALL REMAIN
8. REFER TO SPECIFICATION 02 41 00 "DEMOLITION" FOR FURTHER DETAILS.
9. THE TEMPORARY UPS MAY BE REMOVED ONLY WHEN THE NEW UPS SYSTEM HAS BEEN COMPLETELY TESTED AND OPERATIONAL.
10. CONTRACTOR SHALL UTILIZE EXISTING SPARE BREAKERS IN PANEL MDPE. PROVIDE NEW CUTLER HAMMER ELECTRONIC TRIP PLUG FOR TEMPORARY UPS BYPASS FEED (K FRAME BREAKER).

- TO BE REMOVED

REV	APPROVED DATE	DESCRIPTION	JCN	RECEIVED DATE	APVD
	03/27/2009	CONSTRUCTION, WR #5757 (GHB)	700006	12/11/2008	

DEPARTMENT OF TRANSPORTATION
FEDERAL AVIATION ADMINISTRATION
ATO - TECHNICAL OPERATIONS — EASTERN SERVICE AREA

ASR
POWER SYSTEM ENCHANCEMENT
TEMPORARY POWER
DEMOLITION

BOSTON — LOGAN INTERNATIONAL AIRPORT — MA

REVIEWED BY	SUBMITTED BY: D.HULL, PROJECT ENGINEER	APPROVED BY: G.NEVILLE, MGR: ENGINEERING - BOSTON
DESIGNED: DH	ISSUED BY: ENGINEERING SERVICES INFRASTRUCTURE	DATE: 03/27/2009 — JCN: 700006
DRAWN: GHB		DRAWING NO: BOS-700006-D001 — REV:
CHECKED		

ISSUED FOR: CONSTRUCTION

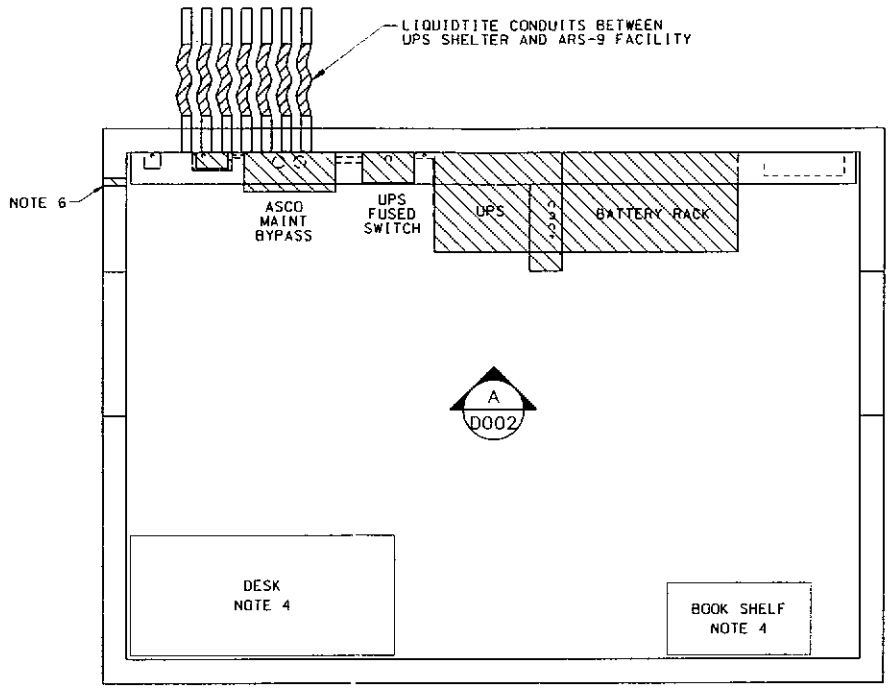

1 D002 UPS SHELTER FLOOR PLAN
SCALE: 1/2" = 1'-0"

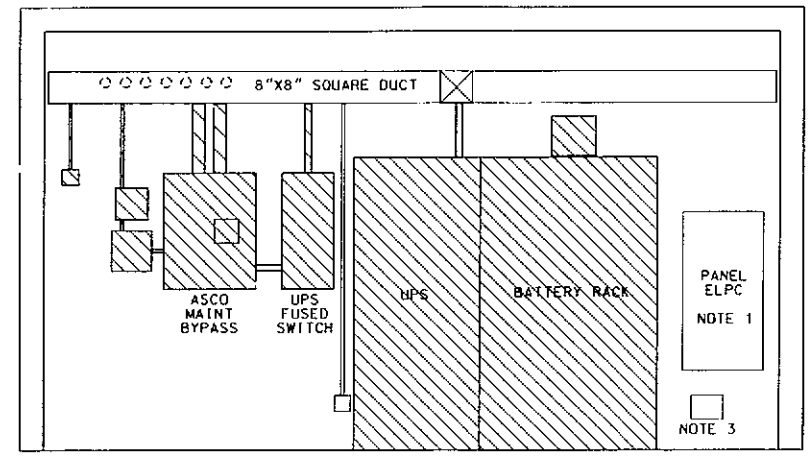

A D002 UPS SHELTER EQUIPMENT ELEVATION
SCALE: 1/2" = 1'-0"

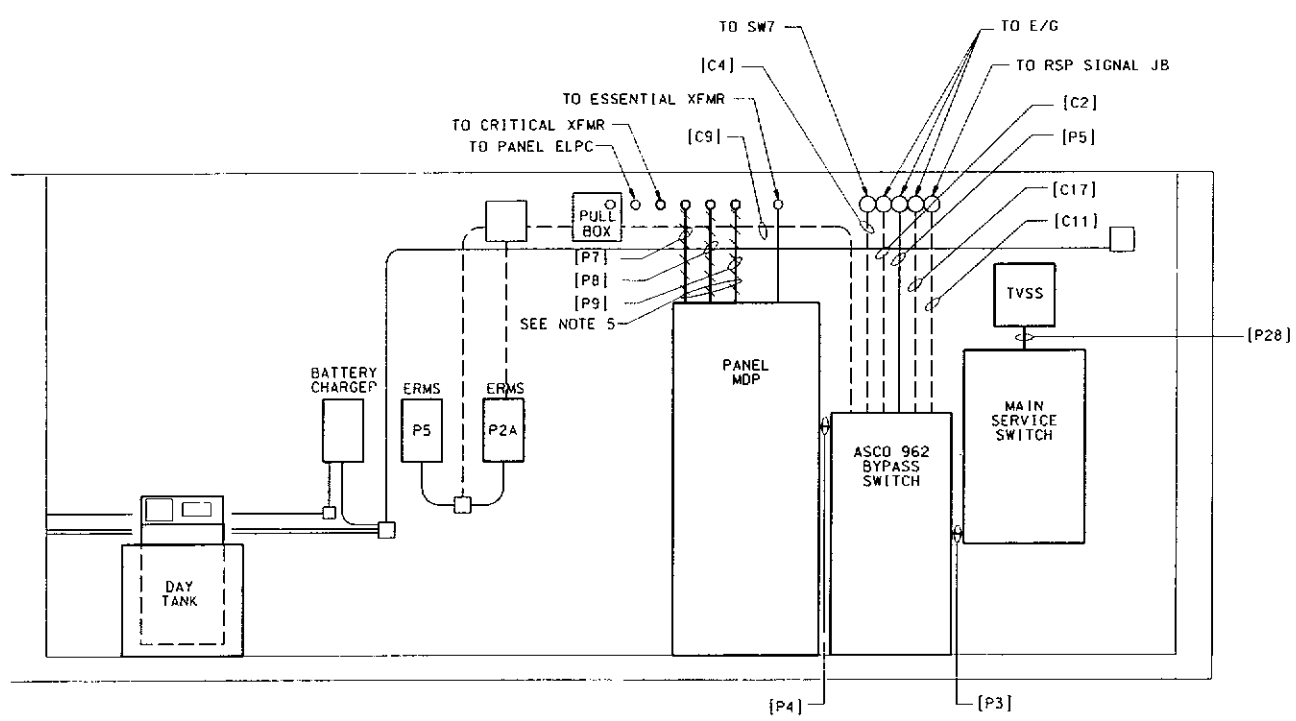

B E002 E/G ROOM ELEVATION
SCALE: 1/2" = 1'-0"

LEGEND:

- - - - - CONTROL CONDUIT

——— POWER CONDUIT

EQUIPMENT TO BE REMOVED

NOTES:

1. PANEL ELPC SHALL REMAIN.
2. SEE DRAWING BOS-D-ASR-D001 FOR ADDITIONAL DEMOLITION NOTES.
3. EXISTING GROUND PLATE SHALL REMAIN.
4. DESK AND BOOK SHELF SHALL BE REMOVED BY OTHERS.
5. PULL WIRE, CONDUIT SHALL REMAIN.
6. CORE DRILL (2) NEW 2 1/2" HOLES. LOCATION TO BE FIELD DETERMINED.

1' 0 1' 2' 5'
SCALE: 1/2" = 1'-0"

REV	APPROVED DATE	DESCRIPTION	JCN	REDLINE DATE	APVD
	03/27/2009	CONSTRUCTION, WR #8767 (GHB)	700006	12/11/2008	

DEPARTMENT OF TRANSPORTATION
FEDERAL AVIATION ADMINISTRATION
ATO - TECHNICAL OPERATIONS — EASTERN SERVICE AREA

ASR
POWER SYSTEM ENCHANCEMENT
UPS REPLACEMENT WORK
DEMOLITION

BOSTON — LOGAN INTERNATIONAL AIRPORT — MA

REVIEWED BY
SUBMITTED BY: D.HULL — PROJECT ENGINEER
APPROVED BY: G.NEVILLE — MGR: ENGINEERING - BOSTON
DESIGNED: DH
DRAWN: GHB
CHECKED
ISSUED BY: ENGINEERING SERVICES INFRASTRUCTURE
DATE: 03/27/2009
JCN: 700006
DRAWING NO: BOS-700006-D002
REV

ISSUED FOR: CONSTRUCTION

THIS DRAWING PRODUCED ON NEW ENGLAND REGION MICROSTATION SYSTEM

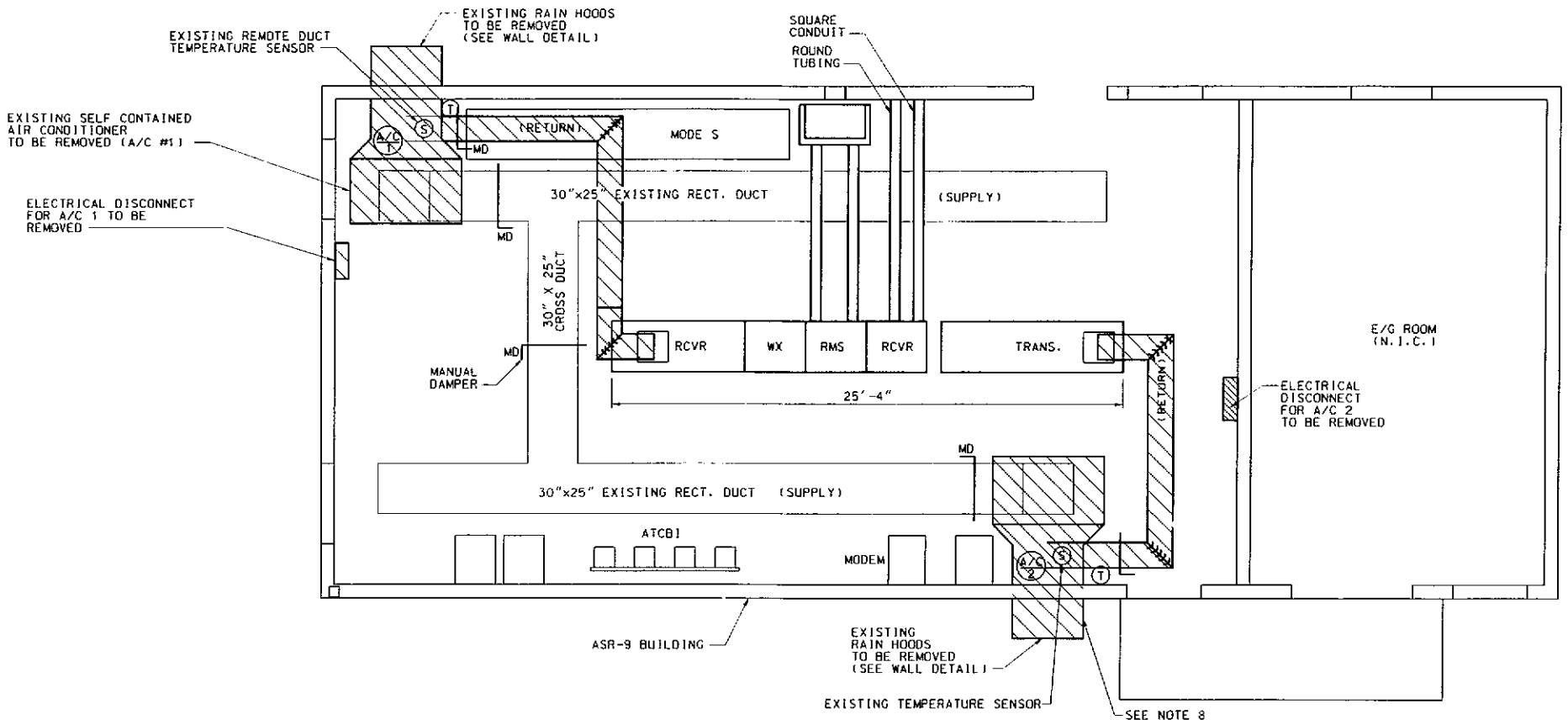

1 / M001 EQUIPMENT LAYOUT A/C UNITS & DUCT WORK
SCALE: 1/4" = 1'-0"

DEMOLITION NOTES:

WORK ASSOCIATED TO BID ALTERNATE #1

1. REMOVE AND DISPOSE OF ACU-1 AND ACU-2 AND ASSOCIATED CONTROLS.
2. CONTRACTOR IS RESPONSIBLE FOR RECOVERING AND PROPERLY DISPOSING ALL REFRIGERANT FROM ACU-1 AND ACU-2 ACCORDING TO EPA REGULATIONS.
3. REMOVE AND DISPOSE OF EXISTING FUSED DISCONNECTS (2).
4. REMOVE AND DISPOSE OF EXISTING INTAKE, EXHAUST, AND ECONOMIZER HOODS FOR ACU-1 AND ACU-2.
5. REMOVE AND DISPOSE OF ALL ASSOCIATED DUCT WORK AND MATERIALS AS SHOWN ON CONSTRUCTION DRAWINGS.
6. REMOVE AND DISPOSE OF ALL CONDUITS, AND CONDUCTORS ASSOCIATED WITH ACU-1 AND ACU-2.
7. EXISTING UPS SHELTER HVAC UNITS SHALL REMAIN.
8. TRENCHING OF EXISTING ASPHAULT IS REQUIRED TO ACCESS EXISTING COUNTER POISE. REPAIR IMPACTED ASPHAULT TO MATCH EXISTING.

- TO BE REMOVED

4' 0 4' 8'
SCALE: 1/4" = 1'-0"

REV	APPROVED DATE	DESCRIPTION	JCN	REQUIRE DATE	APVD
	03/27/2009	CONSTRUCTION, WR #8767 (GHB)	700006	12/11/2008	

DEPARTMENT OF TRANSPORTATION
FEDERAL AVIATION ADMINISTRATION
ATO - TECHNICAL OPERATIONS EASTERN SERVICE AREA

ASR
POWER SYSTEM ENCHANCEMENT
UPS REPLACEMENT WORK
EQUIPMENT DEMOLITION

BOSTON LOGAN INTERNATIONAL AIRPORT MA

REVIEWED BY
SUBMITTED BY B.LUQUETTE PROJECT ENGINEER
APPROVED BY G.NEVILLE MGR: ENGINEERING - BOSTON
DESIGNED DH
DRAWN GHB
CHECKED
ISSUED BY ENGINEERING SERVICES INFRASTRUCTURE
DATE 03/27/2009 JCN 700006
DRAWING NO BOS-700006-D003 REV

ISSUED FOR: CONSTRUCTION

THIS DRAWING PRODUCED ON NEW ENGLAND REGION MICROSTATION SYSTEM

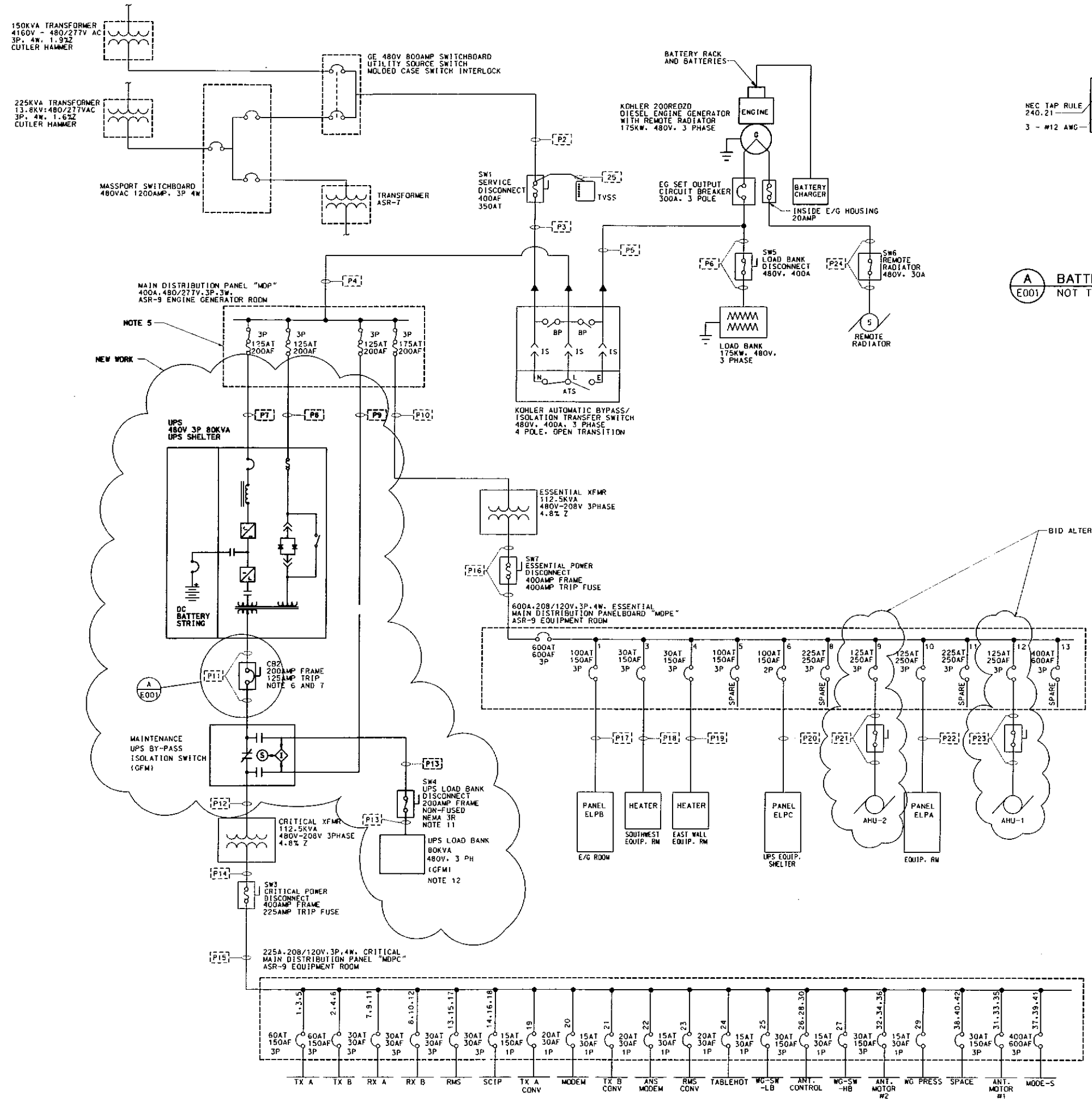

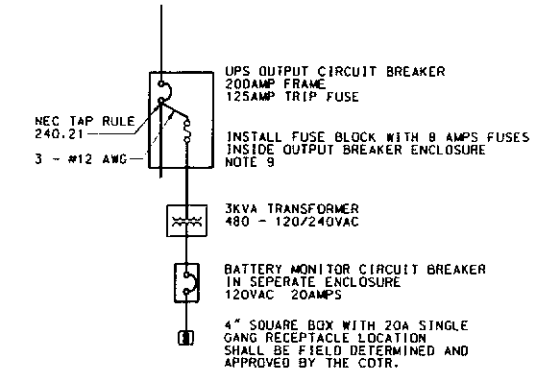

A E001 BATTERY MONITOR CIRCUIT
NOT TO SCALE

NOTES:

1. THIS IS AN ACTIVE AIR TRAFFIC CONTROL FACILITY. ALL WORK SHALL BE COORDINATED AND APPROVED BY THE CDTR TO NOT INTERRUPT FAA OPERATIONS.
2. PROVIDE AND INSTALL CONDUIT AND CONDUCTORS AS NOTED ON DRAWING BOS-D-ASR-E005.
3. CONDUCTORS IN CRITICAL POWER CIRCUITS SHALL NOT BE SPLICED.
4. GOVERNMENT SHALL PROVIDE SHIPPING, AND UNLOADING OF THE NEW UPS INTO THE SHELTER. CONTRACTOR SHALL COORDINATE DELIVERY WITH CDTR AND BE AVAILABLE TO ASSIT UNLOADING PROCESS.
5. REPLACE EXISTING 175 AMP FUSES WITH NEW 125 AMP BUSSMAN FUSETRON DUAL ELEMENT TIME DELAY CLASS RK5 FUSES. PROVIDE ONE SET OF SPARE FUSES.
6. PROVIDE AND INSTALL NEW UPS OUTPUT CIRCUIT BREAKER (CB2). BREAKER SHALL BE MOLDED CASE WITH PROGRAMMABLE ELECTRONIC TRIP. GE MODEL NUMBER SGLL36BB0400 OR APPROVED EQUAL. IN SEPERATE ENCLOSURE.
7. CONTRACTOR SHALL SUBMIT ON ALL MATERIAL ACCORDING TO THE REQUIREMENTS IN DIVISION 01 33 00 OF THE SPECIFICATION.
8. ALL UPS POWER CONDUCTORS SHALL BE COPPER, 600V WITH 90 DEGREE RATED INSULATION.
9. PROVIDE AND INSTALL ALL MATERIAL FOR UPS BATTERY MONITOR CIRCUIT AS SHOWN IN DETAIL A.
10. THE CONTRACTOR SHALL ASSIST THE FAA, AND THE EATON REPRESENTATIVE IN TESTING THE NEW UPS SYSTEM TO MEET FAA ORDERS 6980.25C AND 6980.29A.
11. PROVIDE AND INSTALL NEW NEMA 4X 200AMP 3PHASE NON-FUSED LOADBANK DISCONNECT.
12. 80KVA 480VAC STATIONARY LOADBANK (GFE). CONTRACTOR SHALL PROVIDE AND INSTALL CONDUIT, CONDUCTORS, AND NEW CONCRETE PAD.

BID ALTERNATE #1

1. REPLACE EXISTING ACU-1 AND ACU-2. SEE BOS-700006-M001 FOR DETAILS.
2. REPLACE CONDUIT AND FEEDERS. REFER TO BOS-70006-E005 FOR SIZES
3. REPLACE EXISTING CUTLER-HAMMER TRIP UNIT MODEL JT3125T WITH NEW TRIP UNIT MODEL JT3150T, FOR BOTH ACU CIRCUIT BREAKERS IN PANEL MDPE.
4. REPLACE EXISTING ACU DISCONNECTS WITH NEW 200AMP NON-FUSED 3 PHASE NEMA 1 HEAVY DUTY DISCONNECTS.

COLOR CODE

480/277 VAC 3 PHASE POWER
PHASE A - YELLOW
PHASE B - BROWN
PHASE C - ORANGE
NEUTRAL - GREY
GROUND - GREEN

REV	APPROVED DATE	DESCRIPTION	JCN	REDLINE DATE	APVD
	03/27/2009	CONSTRUCTION, WR #8767 (GHB)	700006	08/11/2008	

DEPARTMENT OF TRANSPORTATION
FEDERAL AVIATION ADMINISTRATION
ATO - TECHNICAL OPERATIONS — EASTERN SERVICE AREA

ASR
POWER SYSTEM ENCHANCEMENT
UPS & E/G INSTALLATION
ONE LINE DIAGRAM

BOSTON — LOGAN INTERNATIONAL AIRPORT — MA

REVIEWED BY
SUBMITTED BY: D.HULL — PROJECT ENGINEER
APPROVED BY: G.NEVILLE — MGR: ENGINEERING - BOSTON
DESIGNED: DH
DRAWN: GHB
CHECKED
ISSUED BY: ENGINEERING SERVICES INFRASTRUCTURE
DATE: 03/27/2009
JCN: 700006
DRAWING NO: BOS-700006-E001
REV

ISSUED FOR: CONSTRUCTION

THIS DRAWING PRODUCED ON NEW ENG. NAC BASIC MICROSTATION SYSTEM

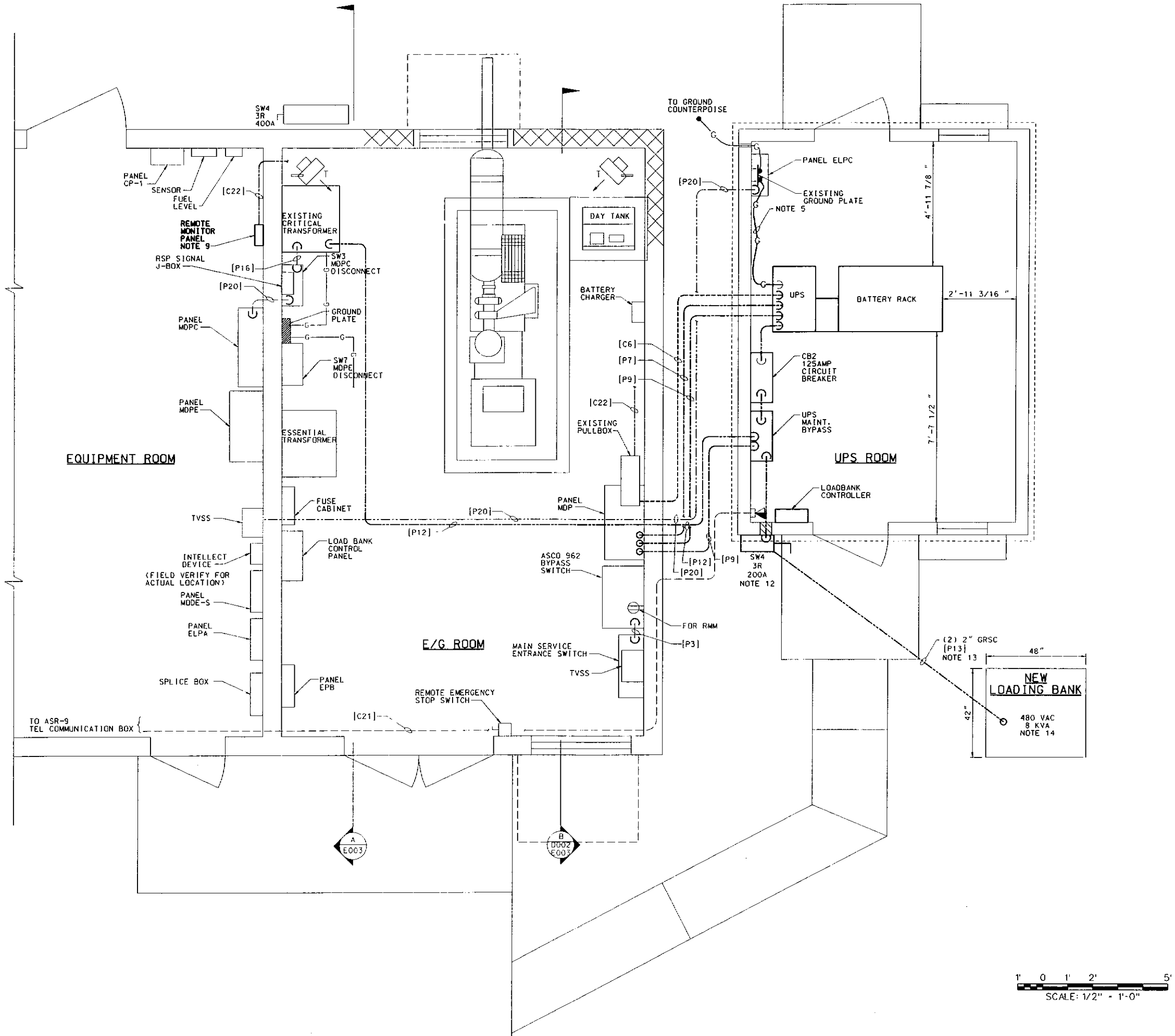

NOTES:

1. EQUIPMENT LOCATIONS IS FOR DIAGRAMMATIC INFORMATION ONLY. CONTRACTOR SHALL SUBMIT ALL NEW EQUIPMENT LOCATIONS TO COTR FOR APPROVAL.
2. FOR CONDUIT AND CONDUCTOR SCHEDULE, SEE DRAWING BOS-700006-E005.
3. ITEMS DEPICTED IN BOLD REPRESENT NEW EQUIPMENT AND SHALL BE THE RESPONSIBILITY OF THE CONTRACTOR INSTALL.
4. CONDUCTORS IN CRITICAL POWER CIRCUITS SHALL NOT BE SPLICED.
5. NEW INSULATED 4/0AWG GROUND IN 1" PVC CONDUIT FROM EXISTING GROUND PLATE TO NEW UPS SYSTEM.
6. CONTRACTOR SHALL BE RESPONSIBLE FOR VERIFYING ALL ELECTRICAL CONNECTIONS AND INSTALLATION REQUIREMENTS AS SHOWN IN THE MANUFACTURERS LITERATURE.
7. NEW CONDUIT ROUTING IS FOR INFORMATION ONLY. ACTUAL ROUTING OF CONDUIT MAY BE MODIFIED TO FIELD CONDITIONS. CONTRACTOR IS RESPONSIBLE TO PROVIDE ALL ELECTRICAL WIRING EITHER EXPRESSED OR IMPLIED.
8. CONDUIT PENETRATIONS INTO THE BUILDING SHALL BE FILLED WITH A REMOVABLE SEALING COMPOUND
9. REMOTE POWER MONITOR (GFE). PROVIDE AND INSTALL NEW SHIELDED TWISTED PAIR CONTROL CABLE PER MANUFACTURERS INSTRUCTIONS. EXISTING CONDUIT SHALL BE REUSED.
10. ALL CRITICAL POWER CIRCUIT CONDUITS SHALL BE INSTALLED WITH GROUNDING BUSHINGS. ALL BUSHINGS SHALL BE INSTALLED PRIOR TO INSTALLATION OF CONDUCTORS.
11. GROUNDING BUSHINGS ARE NOT REQUIRED ON CONTROL CIRCUIT CONDUITS EXCEPT WHEN TRANSITIONING FROM EXTERIOR TO INTERIOR. INSTALL PLASTIC BUSHINGS IN ALL OTHER LOCATIONS.
12. PROVIDE AND INSTALL NEW NEMA 4X 200AMP NON-FUSED LOADBANK DISCONNECT.
13. PROVIDE AND INSTALL NEW CONDUIT AND CONDUCTORS FROM LOADBANK DISCONNECT, AND LOADBANK CONTROLLER TO GFE LOADBANK. ALL EXCAVATION SHALL BE BY HAND.
14. LOCATION OF LOADBANK PAD SHALL BE FIELD DETERMINED, AND APPROVED BY THE COTR. ALL EXCAVATION SHALL BE BY HAND.
15. REFER TO SPECIFICATION FOR FURTHER REQUIREMENTS.
16. CONTRACTOR IS RESPONSIBLE FOR ANY DAMAGE CAUSED TO THE FACILITY DURING CONSTRUCTION. ANY AREAS DAMAGED BY THE CONTRACTOR SHALL BE REPAIRED OR REPLACED TO THEIR ORIGINAL CONDITIONS AT NO ADDITIONAL COST TO THE FAA.

GOVERNMENT FURNISHED EQUIPMENT (GFE):

UPS - EATON MODEL POWERWARE 9390 480VAC 80KVA

BATTERY SYSTEM - VRLA TYPE BATTERIES

UPS MANUAL BYPASS - EATON WALLMOUNT

BATTERY MONITOR - ALBER

REMOTE MONITOR ALARM - EATON

LOAD BANK - 480VAC 80KVA STATIONARY SIMPLEX LOADBANK

MANUALS - 2 SETS O&M AND INSTALLATION

REV	APPROVED DATE	DESCRIPTION	JCN	REDLINE DATE	APVD
	03/27/2009	CONSTRUCTION, WR #8767 (GHB)	700006	08/11/2008	

DEPARTMENT OF TRANSPORTATION
FEDERAL AVIATION ADMINISTRATION
ATO - TECHNICAL OPERATIONS **EASTERN SERVICE AREA**

ASR

POWER SYSTEM ENCHANCEMENT
UPS & E/G INSTALLATION
ELECTRICAL PLAN

BOSTON LOGAN INTERNATIONAL AIRPORT MA

REVIEWED BY

SUBMITTED BY: D.HULL — PROJECT ENGINEER

APPROVED BY: G.NEVILLE — MGR: ENGINEERING - BOSTON

DESIGNED DH
DRAWN GHB
CHECKED

ISSUED BY: ENGINEERING SERVICES INFRASTRUCTURE

DATE 03/27/2009 JCN 700006

DRAWING NO BOS-700006-E002 REV

ISSUED FOR: CONSTRUCTION

THIS DRAWING PRODUCED ON NEW ENGLAND REGION MICROSTATION SYSTEM

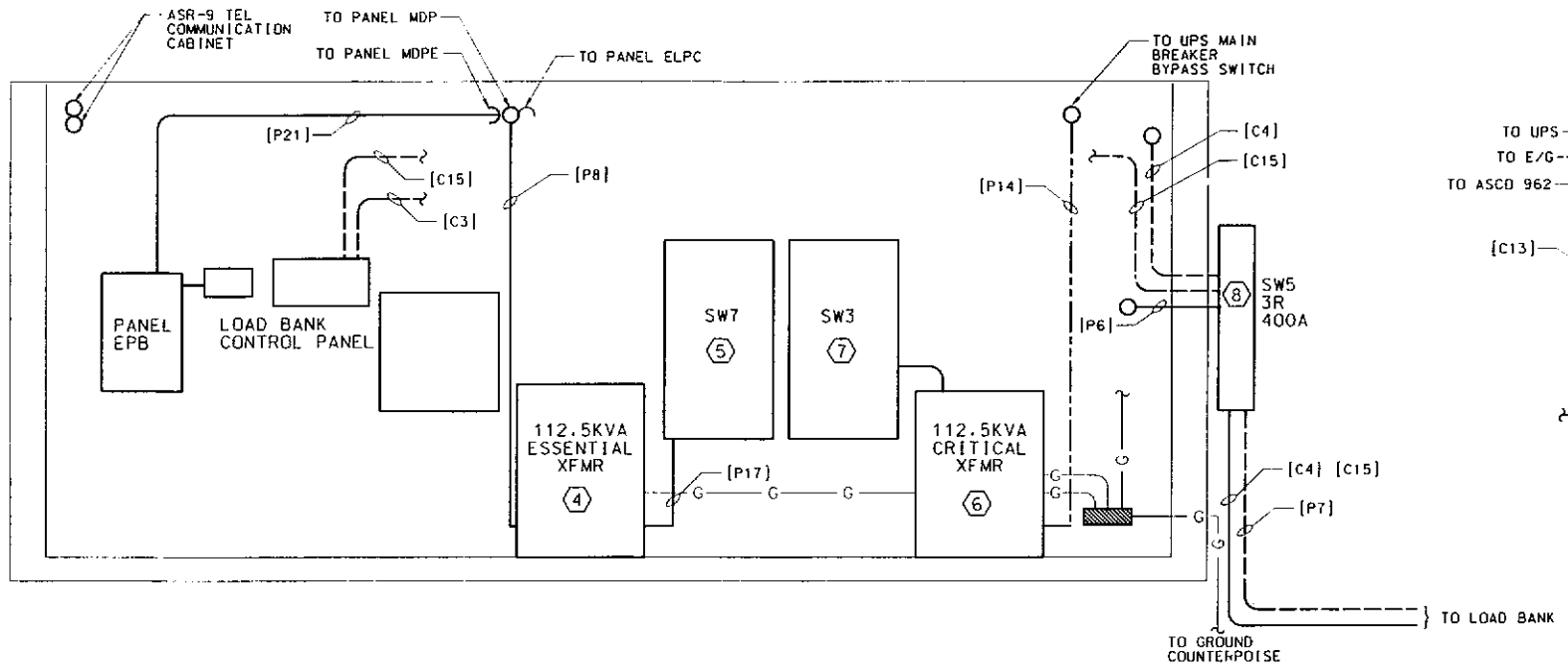

A E002 ELEVATION
SCALE: 1/2" = 1'-0"

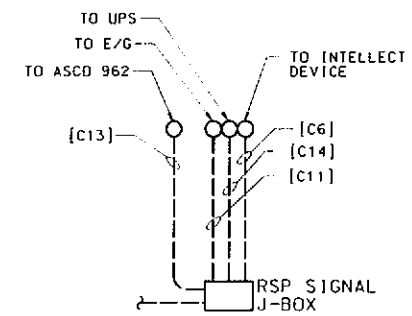

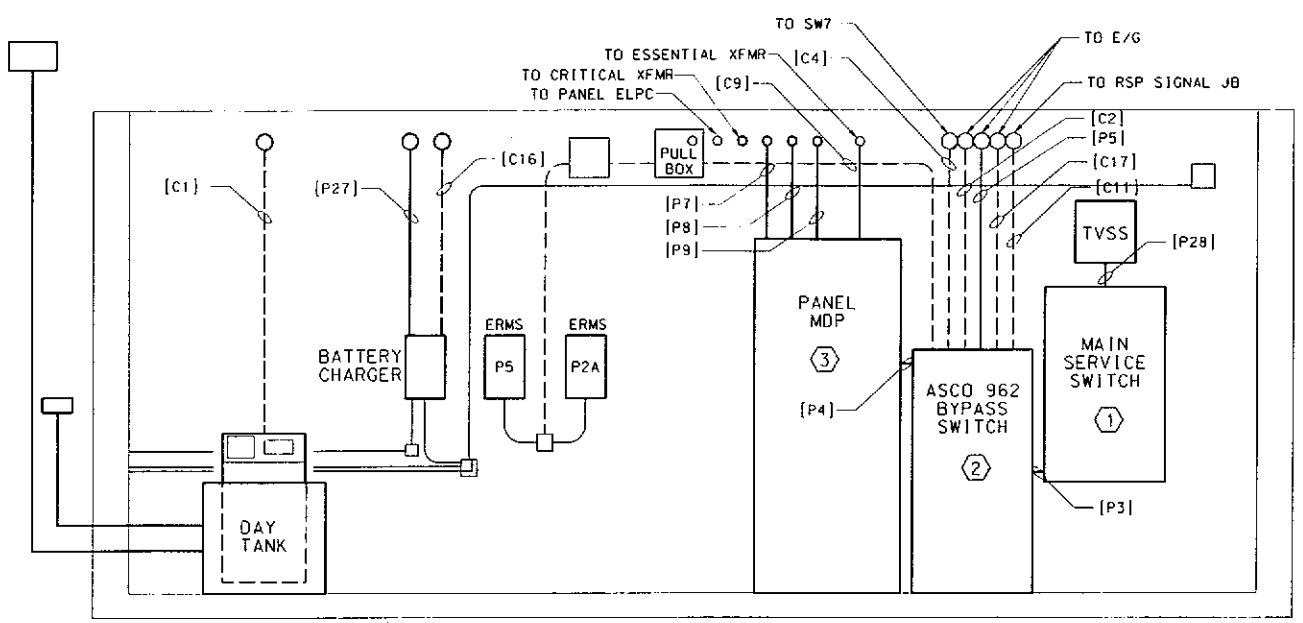

B E002 ELEVATION
SCALE: 1/2" = 1'-0"

NOTES:

1. NEW UPS FEEDERS SHALL BE FED FROM PANEL MDP.
2. SEE DRAWING BOS-700006-E005 FOR CONDUIT AND CONSUCTORS SIZES.

EXISTING EQUIPMENT:

1. SERVICE ENTRANCE DISCONNECT SWITCH, 480VAC. SQUARE D, HEAVY DUTY 400AMP WITH 350AMP FUSES, 3P, 3W.
2. AUTOMATIC TRANSFER SWITCH, 480VAC, 400AMP 3P, 3W. ASCO 962 COMBINATION TRANSFER SWITCH AND BYPASS. OPEN TRANSITION.
3. MAIN DISTRIBUTION PANELBOARD, "MDP", 480VAC. SQUARE D, QMB PANELBOARD, 600AMP, 3P, 3W.
4. ESSENTIAL POWER TRANSFORMER. SQUARE D, 112.5KVA K-13, 480VAC:208/120VAC, 4.8%Z.
5. ESSENTIAL POWER DISCONNECT, 208VAC. SQUARE D. HEAVY DUTY, 240V, 3P, 4W, 400AMP WITH 400AMP FUSES.
6. CRITICAL POWER TRANSFORMER. SQUARE D, 112.5KVA K-13, 480VAC:208/120VAC, 4.8%Z.
7. CRITICAL POWER DISCONNECT, 208VAC. SQUARE D. HEAVY DUTY 240V, 3P, 4W, 400AMP WITH 225AMP FUSES
8. ENGINE GENERATOR LOADBANK DISCONNECT, 480VAC. SQUARE D, 600V, 3P, 3W, 400AMP, NONFUSED.

1' 0 1' 2' 5'
SCALE: 1/2" = 1'-0"

REV	APPROVED DATE	DESCRIPTION	JCN	REDLINE DATE	APVD
	03/27/2009	CONSTRUCTION, WR #8767 (GHB)	700006	08/11/2008	

DEPARTMENT OF TRANSPORTATION
FEDERAL AVIATION ADMINISTRATION
ATO - TECHNICAL OPERATIONS **EASTERN SERVICE AREA**

ASR
POWER SYSTEM ENHANCEMENT
UPS & E/G INSTALLATION
ELEVATIONS

BOSTON LOGAN INTERNATIONAL AIRPORT MA

REVIEWED BY
SUBMITTED BY: D.HULL — PROJECT ENGINEER
APPROVED BY: G.NEVILLE — MGR: ENGINEERING - BOSTON
DESIGNED DH
DRAWN POD
CHECKED
ISSUED BY: ENGINEERING SERVICES INFRASTRUCTURE
DATE 03/27/2009
JCN 700006
DRAWING NO BOS-700006-E003
REV

ISSUED FOR: CONSTRUCTION

THIS DRAWING PRODUCED ON NEW ENGLAND REGION MICROSTATION SYSTEM

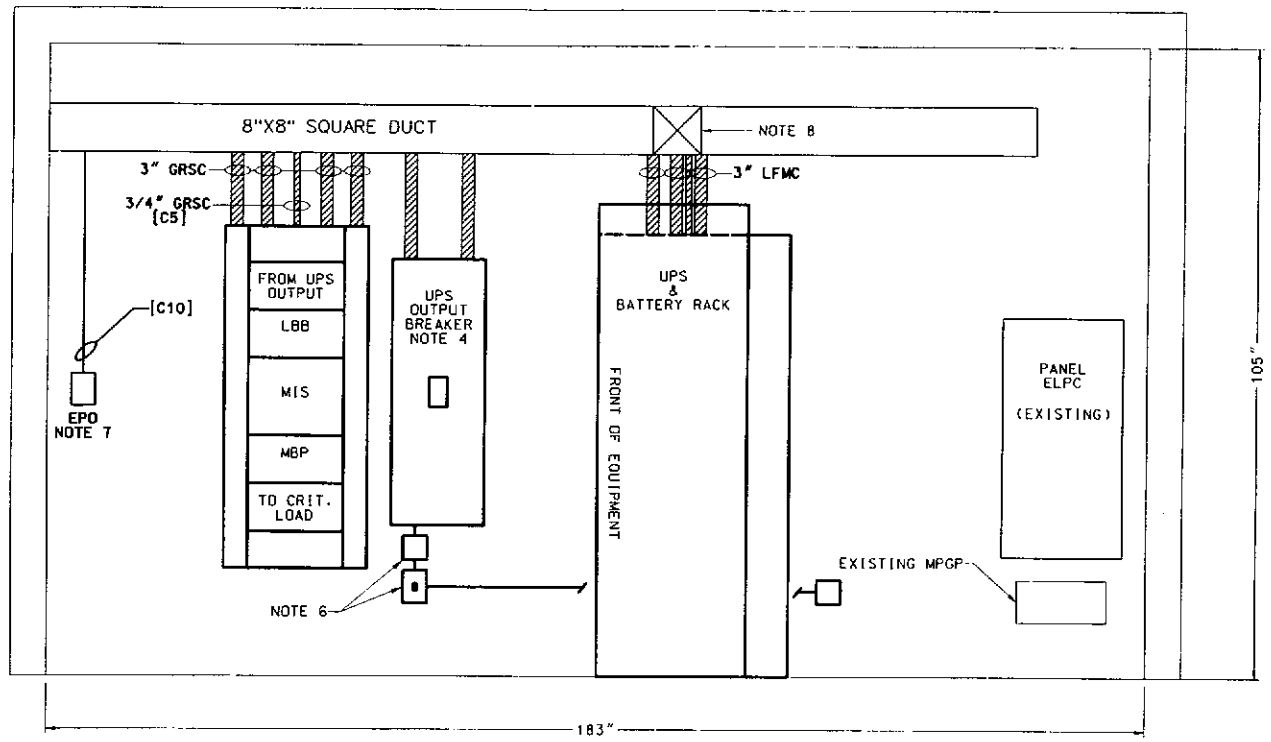

A E004 ELEVATION
SCALE: 3/4" = 1'-0"

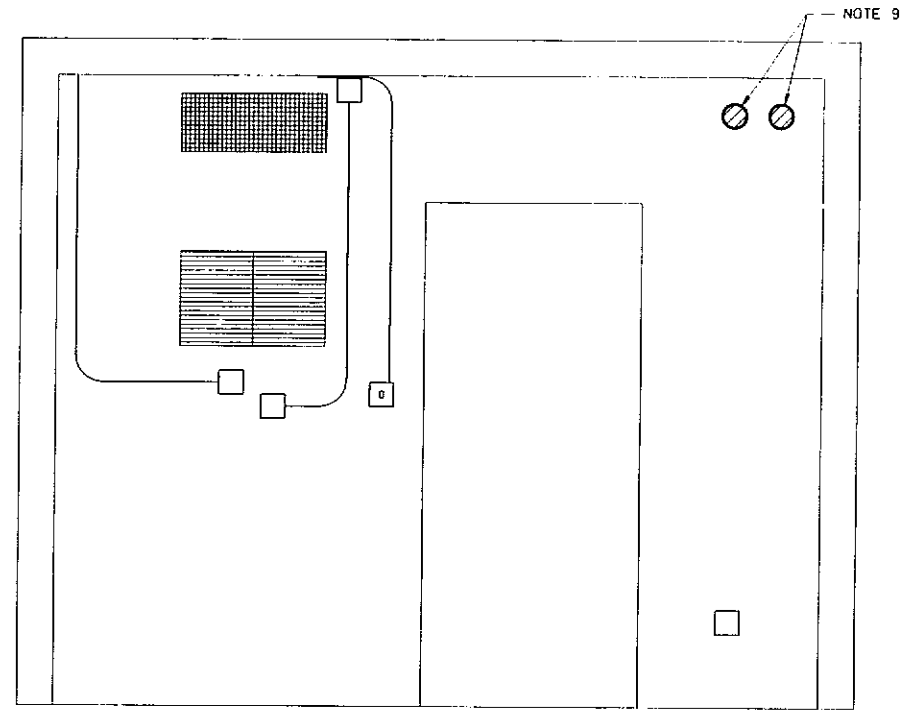

B E004 ELEVATION
SCALE: 3/4" = 1'-0"

NOTES:

1. EQUIPMENT LOCATIONS IS FOR DIAGRAMMATIC INFORMATION ONLY. CONTRACTOR SHALL SUBMIT ALL NEW EQUIPMENT LOCATIONS TO COTR FOR APPROVAL.
2. CONTRACTOR SHALL REVIEW ALL MANUFACTURERS DATA FOR EXACT SIZING AND WIRING SCHEMATICS.
3. DO NOT DISCARD UPS SHIPPING BRACKETS. BRACKETS SHALL BE UTILIZED FOR PERMANENT MOUNTING OF UPS.
4. CONTRACTOR SHALL PROVIDE UPS OUTPUT BREAKER, AND ENCLOSURE. CIRCUIT BREAKER SHALL BE GE, MODEL NUMBER: SGLL36BB0400 OR APPROVED EQUAL. IF SUBMITTING ON EQUAL CONTRACTOR SHALL BE REQUIRED TO PERFORM A DEVICE COORDINATION ANALYSIS.
5. SEE DRAWING BOS-700006-E005 FOR CONDUIT AND CONDUCTOR SCHEDULE
6. PROVIDE 3KVA 480-240V AC STEP DOWN TRANSFORMER WITH 20 AMP CIRCUIT BREAKER IN SEPARATE ENCLOSURE FOR BATTERY MONITOR RECEPTACLE. INSTALL TAP CIRCUIT ACCORDING TO NEC 240.21. RECEPTACLE LOCATION SHALL BE FIELD DETERMINED.
7. EMERGENCY POWER OFF (EPO) MOUNT NEW EPO TO EXISTING BOX AND INSTALL NEW CONDUCTORS IN EXISTING 3/4" EMT.
8. EXTEND EXISTING 8" X 8" SQUARE DUCT AS NEEDED FOR NEW UPS LOCATION. SQUARE DUCT SHALL BE BONDED WITH #6 AWG GROUND TO MAKE ELECTRICALLY CONTINUOUS.
9. CORE DRILL (2) 2 1/2" HOLES FOR LOAD BANK CONDUIT. EXACT LOCATION SHALL BE FIELD DETERMINED AND APPROVED BY COTR.

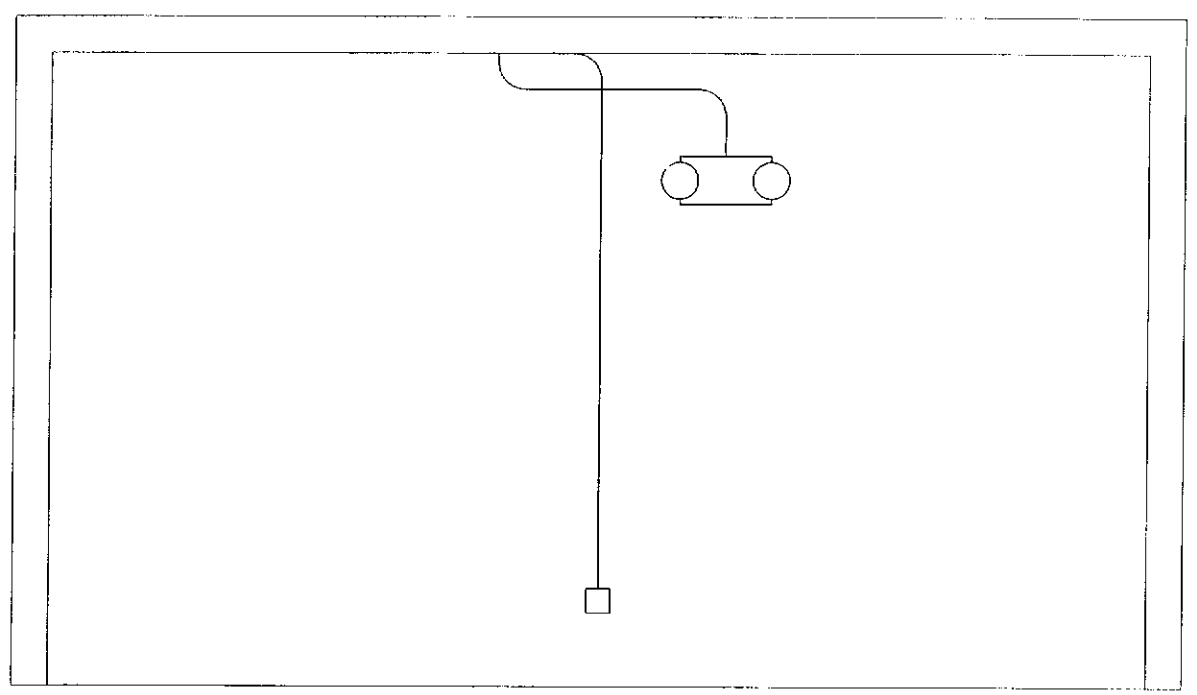

C E004 ELEVATION
SCALE: 3/4" = 1'-0"

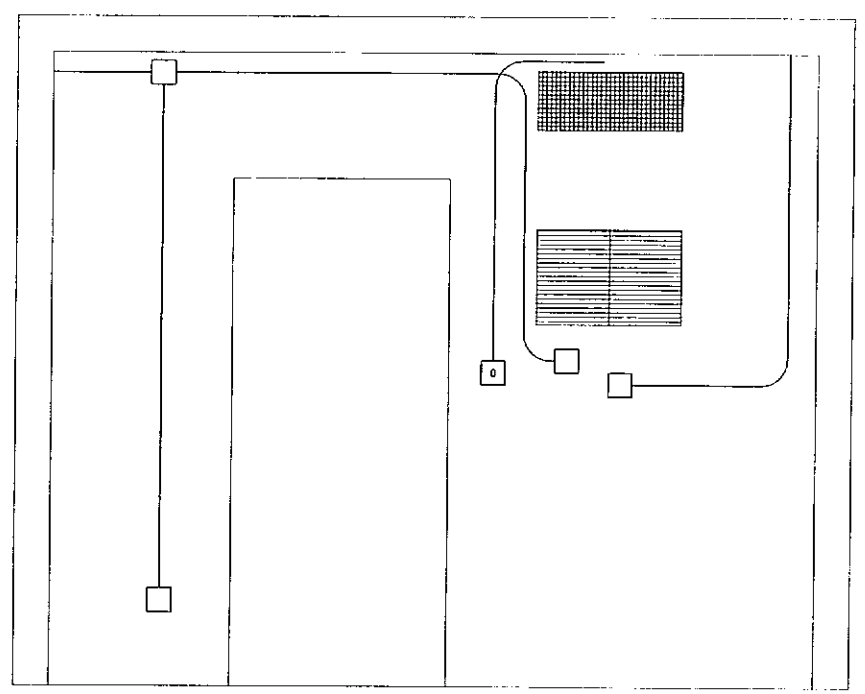

D E004 ELEVATION
SCALE: 3/4" = 1'-0"

1' 0 1' 2' 3'
SCALE: 3/4" = 1'-0"

REV	APPROVED DATE	DESCRIPTION	JCN	REDLINE DATE	APVD
	03/27/2009	CONSTRUCTION, WR #8767 (GHB)	700006	08/11/2008	

DEPARTMENT OF TRANSPORTATION
FEDERAL AVIATION ADMINISTRATION
ATO - TECHNICAL OPERATIONS — EASTERN SERVICE AREA

ASR
POWER SYSTEM ENHANCEMENT
UPS & E/G INSTALLATION
SHELTER ELEVATIONS

BOSTON — LOGAN INTERNATIONAL AIRPORT — MA

REVIEWED BY
SUBMITTED BY: D.HULL — PROJECT ENGINEER
APPROVED BY: G.NEVILLE — MGR: ENGINEERING - BOSTON
DESIGNED: DH
DRAWN: POD
CHECKED:
ISSUED BY: ENGINEERING SERVICES INFRASTRUCTURE
DATE: 03/27/2009
JCN: 700006
DRAWING NO: BOS-700006-E004
REV

ISSUED FOR: CONSTRUCTION

THIS DRAWING PRODUCED ON NEW ENGLAND REGION MICROSTATION

CONDUIT AND CABLE SCHEDULE (POWER)

FEEDER NUMBER	FROM	TO	CONDUCTORS NO.	CONDUCTORS SIZE	GND COND	NO. OF RUNS	CONDUIT SIZE	REMARKS
[P1]	UTILITY X'FMR	METERING CABINET	4	#250 KCM	#1	2	2 1/2"	-
[P2]	SWITCHGEAR	SERVICE DISC SWITCH	3	#350 KCM	#1	1	2 12/"	-
[P3]	SERVICE DISC SWITCH	ATS/BYPASS (962)	3	#2/0	#1/0	2	4"	-
[P4]	ATS/BYPASS (962)	MDP	3	#2/0	#2	2	2 1/2"	-
[P5]	ATS/BYPASS (962)	E/G CIRCUIT BREAKER	3	#350 KCM	#2	1	3"	-
[P6]	E/G CIRCUIT BREAKER	SW5 - EG LOAD BANK	3	#2/0	#6	2	3"	-
[P7]	**MDP**	**UPS (INPUT CB1)**	**3**	**#1/0**	**#6**	**1**	**2"**	**CONDUCTORS SHALL BE REPLACED.**
[P8]	**MDP**	**UPS (BYPASS)**	**3**	**#1/0**	**#6**	**1**	**2"**	**CONDUCTORS SHALL BE REPLACED.**
[P9]	**MDP**	**MAINT. BYPASS SWITCH**	**3**	**#1/0**	**#6**	**1**	**2"**	**CONDUCTORS SHALL BE REPLACED.**
[P10]	MDP	ESSENTIAL XFMR (480V)	3	#2/0	#6	1	2"	-
[P11]	**UPS OUTPUT**	**CB2 - MAINT. BYPASS SW**	**3**	**#1/0**	**#6**	**1**	**2"**	**REPLACE CONDUIT AND CONDUCTORS.**
[P12]	**MAINT. BYPASS SW OUTPUT**	**CRITICAL XFMR (480V)**	**3**	**#1/0**	**#6**	**1**	**2"**	**CONDUCTORS SHALL BE REPLACED.**
[P13]	**MAINT. BYPASS SWITCH**	**UPS LOADBANK SWITCH-SW3**	**3**	**#1/0**	**#6**	**1**	**2"**	**REPLACE CONDUIT AND CONDUCTORS.**
[P14]	CRITICAL XFMR (208V)	CRITICAL DISCONNECT-SW4	4	#4/0	#2	2	2"	-
[P15]	CRITICAL DISCONNECT-SW3	PANEL MDPC	4	#2/0	#6	2	2"	-
[P16]	ESSENTIAL XFMR (208V)	SW7 - PANEL MDPE	4	#2/0	#6	2	2"	-
[P17]	MDPE	PANEL ELPB	4	#2	#8	1	1 1/2"	-
[P18]	MDPE	SW HEATER	3	#10	#10	1	3/4"	-
[P19]	MDPE	EAST HEATER	3	#10	#10	1	3/4"	-
[P20]	MDPE	PANEL ELPC	4	#2	#8	1	1 1/2"	-
[P21]	**MDPE**	**ACU-2**	**3**	**#1/0**	**#6**	**1**	**1 1/2"**	**REPLACE CONDUIT AND CONDUCTORS.**
[P22]	MDPE	PANEL ELPA	4	#2	#8	1	1 1/2"	-
[P23]	**MDPE**	**ACU-1**	**3**	**#1/0**	**#6**	**1**	**1 1/2"**	**REPLACE CONDUIT AND CONDUCTORS.**
[P24]	E/G CIRCUIT BREAKER	REMOTE RADIATOR	3	#12	#12	1	3/4"	-
[P25]	DISCONNECT SWITCH	TVSS	4	#2	#2	1	1 1/4"	-
[P26]	**UPS OUTPUT BREAKER**	**3KVA STEP DOWN XMFR**	**2**	**#12**	**#12**	**1**	**3/4"**	**NEC TAP RULE 240.21**

CONDUIT AND SCHEDULE (CONTROL)

FEEDER NUMBER	FROM	TO	CONDUCTORS NO.	CONDUCTORS SIZE	GND COND	NO. OF RUNS	CONDUIT SIZE	REMARKS
[C1]	E/G CONTROL PANEL	GENERATOR DAY TANK	2	#14	#14	1	3/4"	
[C2]	E/G AUX RELAY BOX	ASCO 962 ATS	10	#14	#14	1	3/4"	
[C3]	LOAD BANK CONTROL PNL	RSP SIGNAL JUNCTION BOX	2	#14	#14	1	3/4"	
[C4]	ASCO 962 ATS SHORTING BLOCK	175 KW LOAD BANK	2	#14	#14	1	3/4"	
[C5]	**UPS**	**MAINTENANCE BYPASS PANEL**	**2**	**#14**	**#14**	**1**	**3/4"**	**PROVIDE AND INSTALL NEW.**
[C6]	**UPS**	**RSP SIGNAL JUNCTION BOX**	**3**	**#14**	**#14**	**1**	**3/4"**	**REPLACE EXISITING CONDUCTORS.**
~~[C7]~~	~~SUPERVISORY MODULE~~	~~AUX RELAY PANEL~~	~~2~~	~~#14~~	~~#14~~	~~1~~	~~3/4"~~	
~~[C8]~~	~~AUX RELAY PANEL~~	~~ASCO BYPASS 933~~	~~10~~	~~#14~~	~~#14~~	~~1~~	~~3/4"~~	
[C9]	**ASCO 962 ATS**	**UPS**	**2**	**#14**	**#14**	**1**	**3/4"**	**REPLACE EXSITING CONDUCTORS.**
[C10]	**UPS**	**EPO**	**2**	**#14**	**#14**	**1**	**3/4"**	**REPLACE EXSITING CONDUCTORS.**
[C11]	ASCO 962 ATS	RSP SIGNAL JUNCTION BOX	5	#14	#14	1	3/4"	
[C12]	ASCO 962 ATS EMERGENCY POWER MONITOR	E/G CABINET CT SHORTING BLOCK	4	#14	#14	-	-	
[C13]	RSP JUNCTION BOX	INTELLECT DEVICE	8	#14	#14	1	3/4"	
[C14]	E/G CONTROL PANEL	RSP SIGNAL JUNCTION BOX	2	#14	#14	1	3/4"	
[C15]	175KW LOAD BANK	LOAD BANK CONTROL PANEL	6	#14	#14	1	3/4"	
[C16]	BATTERY CHARGER	E/G CONTROL PANEL	3	#14	#14	1	3/4"	
[C17]	ASCO 962 ATS	E/G CONTROL PANEL	2	#14	#14	-	-	
[C18]	E/G BATTERY	10A FUSE BLOCK	2	#12	#12	1	3/4"	
[C19]	10A FUSE BLOCK	SET MTD DRY CONTACT KIT	2	#12	#12	1	3/4"	
[C20]	EXIST. ASR-9 TELE TERMINATION BOX	TELE OUTLET IN E/G/RM FOR ASCO 962 ATS BYPASS SW.	-	TWISTED PAIR CABLE	-	1	3/4"	
[C21]	EXIST. ASR-9 TELE TERMINATION BOX	TELE OUTLET IN UPS SHELTER FOR THE NEW UPS 80 KVA	-	TWISTED PAIR CABLE	-	1	3/4"	
[C22]	**UPS**	**REMOTE MONITOR PANEL**	**2**	**2-TWISTED PAIR CABLE**	**#18**	**1**	**3/4"**	**SHIELDED.**
~~[C23]~~	~~UPS~~	~~SUPERVISORY MODULE~~		~~2-TWISTED PAIR CABLE~~	~~-~~	~~1~~	~~3/4"~~	
[C24]	E/G CONTROL PANEL	REMOTE EMERGENCY STOP SWITCH	2	#14	#14	1	3/4"	
[C25]	INTELLECT DEVICE	TO TELCO CABINET	-	2-TWISTED PAIR CABLE	-	1	3/4"	
[C26]	UPS	DC BATTERY BREAKER	2	#14	#14	1	-	INSTALLED BETWEEN EQUIPMENT.

NOTES:

1. ITEMS IN BOLD SHALL BE PROVIDED AND INSTALLED BY CONTRACTOR.
2. CONDUCTORS SHALL BE 90 DEGREE C RATED. THWN-2 OR APPROVED EQUAL.
3. CRITICAL POWER CIRCUITS SHALL BE INSTALLED IN RIGID STEEL CONDUIT.
4. SEE DRAWING BOS-D-ASR-E002 FOR CONDUIT AND CONDUCTOR LOCATIONS.
5. CONDUCTORS [P21].[P23] ARE PART OF BID ALTERNATE #1.

REV	APPROVED DATE	DESCRIPTION	JCN	REDLINE DATE	APVD
	03/27/2009	CONSTRUCTION, WR #8767 (GHB)	700006	08/11/2005	

DEPARTMENT OF TRANSPORTATION
FEDERAL AVIATION ADMINISTRATION
ATO - TECHNICAL OPERATIONS **EASTERN SERVICE AREA**

ASR
POWER SYSTEM ENHANCEMENT
UPS & E/G INSTALLATION
CONDUIT AND CONDUCTOR SCHEDULE

BOSTON LOGAN INTERNATIONAL AIRPORT MA

REVIEWED BY
SUBMITTED BY D.HULL PROJECT ENGINEER
APPROVED BY G.NEVILLE MGR: ENGINEERING - BOSTON
DESIGNED DH
DRAWN POD
CHECKED
ISSUED BY ENGINEERING SERVICES INFRASTRUCTURE
DATE 03/27/2009
JCN 700006
DRAWING NO BOS-700006-E005
REV

ISSUED FOR: CONSTRUCTION

THIS DRAWING PRODUCED ON NEW ENGLAND REGION MICROSTATION SYSTEM

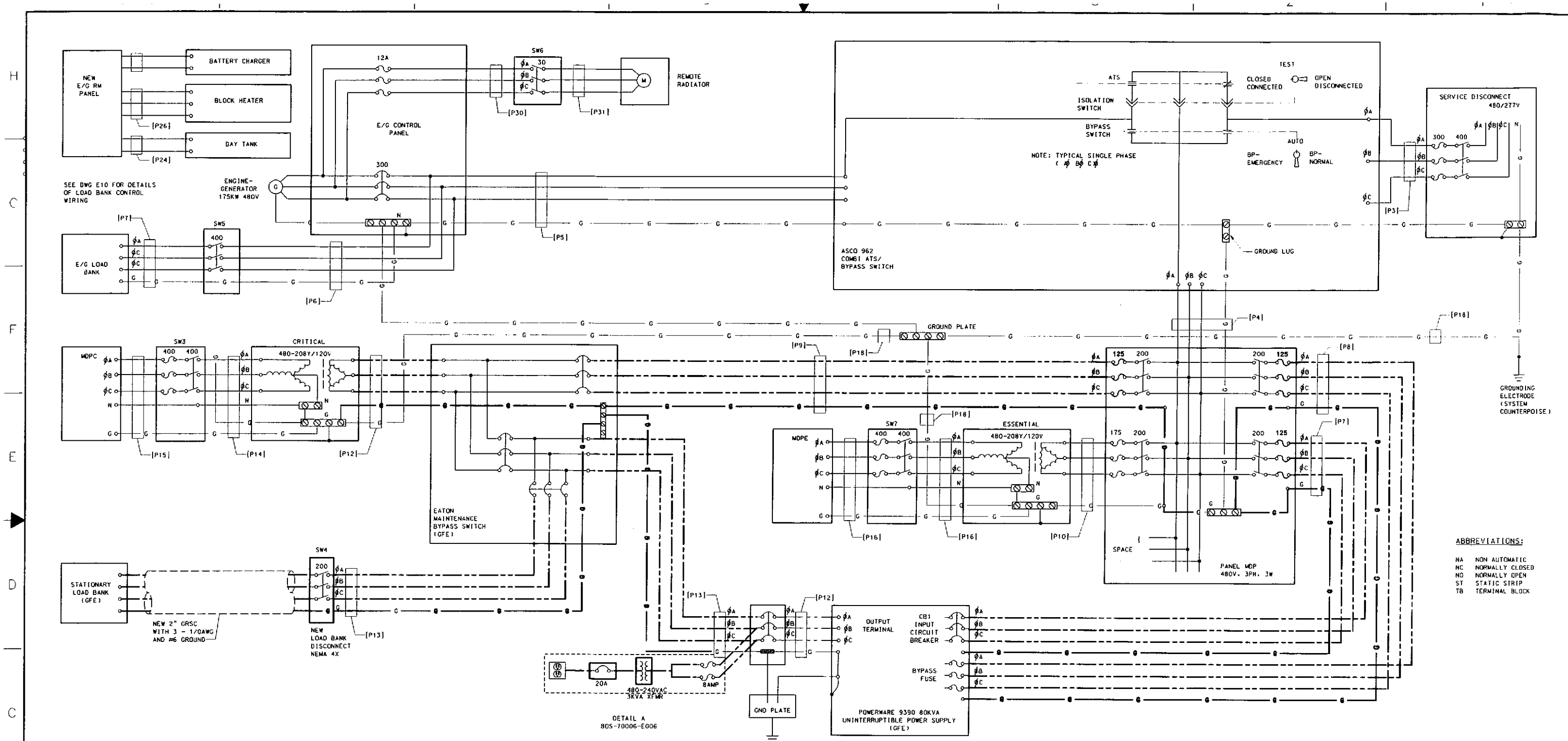

ABBREVIATIONS:

NA	NON AUTOMATIC
NC	NORMALLY CLOSED
NO	NORMALLY OPEN
ST	STATIC STRIP
TB	TERMINAL BLOCK

CONTRACTOR SHALL VERIFY ALL CONNECTIONS

FOR REFERENCE ONLY

REV	APPROVED DATE	DESCRIPTION	JCN	REQUIRE DATE	APVD
	03/27/2009	CONSTRUCTION, WR #8767 (GHB)	700006	08/11/2008	

DEPARTMENT OF TRANSPORTATION
FEDERAL AVIATION ADMINISTRATION
ATO - TECHNICAL OPERATIONS — EASTERN SERVICE AREA

ASR
POWER SYSTEM ENHANCEMENT
UPS & E/G INSTALLATION
UPS & EG INTER CONNECTION DIAGRAM

BOSTON — LOGAN INTERNATIONAL AIRPORT — MA

REVIEWED BY	SUBMITTED BY: D.HULL, PROJECT ENGINEER	APPROVED BY: G.NEVILLE, MGR: ENGINEERING - BOSTON	
DESIGNED: DH	ISSUED BY: ENGINEERING SERVICES INFRASTRUCTURE	DATE: 03/27/2009	JCN: 700006
DRAWN: POD		DRAWING NO: BOS-700006-E006	REV
CHECKED			

ISSUED FOR: CONSTRUCTION

THIS DRAWING PRODUCED ON NEW ENGLAND REGION MICROSTATION SYSTEM

PANEL "MDPE"

VOLTAGE: 208/120 VOLT 3 PHASE - 4 WIRE

MOUNTING: ☐FLUSH ■SURFACE | MAINS: ☐LUGS ONLY --- AMP ■MAIN BREAKER 600 AMP | ☐TOP ■BOTTOM | NEUTRAL: ☐50% ■100%

LOCATION: ENGINE GENERATOR ROOM | ALL BRANCH BREAKERS UL LISTED BREAKER IR 10000 RMS SYM. AMPS.

LOCATION	LOAD	NO.	A B C		NO.	LOAD	LOCATION
PANEL ELPB		1	100	--	2		SPACE
PANEL ELPB		1	100	--	2		SPACE
PANEL ELPB		1	100	--	2		SPACE
HEATER - SW EQUIPMENT RM		3	30	30	4		HEATER - EAST WALL
HEATER - SW EQUIPMENT RM		3	30	30	4		HEATER - EAST WALL
HEATER - SW EQUIPMENT RM		3	30	30	4		HEATER - EAST WALL
SPARE		5	100	100	6		PANEL ELPC
SPARE		5	100	100	6		PANEL ELPC
SPARE		5	100	100	6		PANEL ELPC
SPACE		7	--	225	8		SPARE
SPACE		7	--	225	8		SPARE
SPACE		7	--	225	8		SPARE
AHU-2 NOTE 1		9	125	125	10		PANEL ELPA
AHU-2 NOTE 1		9	125	125	10		PANEL ELPA
AHU-2 NOTE 1		9	125	125	10		PANEL ELPA
SPARE		11	225	125	12		AHU-1 NOTE 1
SPARE		11	225	125	12		AHU-1 NOTE 1
SPARE		11	225	125	12		AHU-1 NOTE 1
SPARE		13	400	600	14		MAIN
SPARE		13	400	600	14		MAIN
SPARE		13	400	600	14		MAIN

PANEL "MDPC"

VOLTAGE: 208/120 VOLT 3 PHASE - 4 WIRE

MOUNTING: ☐FLUSH ■SURFACE | MAINS: ■LUGS ONLY 225 AMP ☐MAIN BREAKER --- AMP | ■TOP ☐BOTTOM | NEUTRAL: ☐50% ■100%

LOCATION: RADAR EQUIPMENT ROOM | ALL BRANCH BREAKERS UL LISTED BREAKER IR 10000 RMS SYM. AMPS.

LOCATION	LOAD	NO.	A B C		NO.	LOAD	LOCATION
TRANSMITTER - A		1	20	20	2		TRANSMITTER - B
TRANSMITTER - A		3	20	20	4		TRANSMITTER - B
TRANSMITTER - A		5	20	20	6		TRANSMITTER - B
RECEIVER - A		7	20	20	8		RECEIVER - B
RECEIVER - A		9	20	20	10		RECEIVER - B
RECEIVER - A		11	20	20	12		RECEIVER - B
RMS		13	20	20	14		SCIP
RMS		15	20	60	16		SCIP
RMS		17	20	60	18		SCIP
TX-A-CONV		19	20	60	20		MODEM
TX-B-CONV		21	20	60	22		MODEM
RMS - CONV		23	20	60	24		MODEM
WG-SW-LB		25	20	60	26		SPARE
WG-SW-HB		27	20	20	28		SPARE
WG-PRESS		29	20	20	30		SPARE
ANTENNA MOTOR #1		31	20	20	32		ANTENNA MOTOR #1
ANTENNA MOTOR #1		33	20	20	34		ANTENNA MOTOR #1
ANTENNA MOTOR #1		35	20	20	36		ANTENNA MOTOR #1
MODE-S PANEL		37	20	20	38		SPARE
MODE-S PANEL		39	20	20	40		SPARE
MODE-S PANEL		41	20	20	42		SPARE

PANEL "MODE-S"

VOLTAGE: 208/120 VOLT 3 PHASE - 4 WIRE

MOUNTING: ☐FLUSH ■SURFACE | MAINS: ■LUGS ONLY 225 AMP ■MAIN BREAKER --- AMP | ■TOP ☐BOTTOM | NEUTRAL: ☐50% ■100%

LOCATION: RADAR EQUIPMENT ROOM | ALL BRANCH BREAKERS UL LISTED BREAKER IR 10000 RMS SYM. AMPS.

LOCATION	LOAD	NO.	A B C		NO.	LOAD	LOCATION
FEI A		1	20	20	2		FEI B
FEI A		3	20	20	4		FEI B
FEI A		5	20	20	6		FEI B
DPS A		7	20	20	8		DPS B
DPS A		9	20	20	10		DPS B
DPS A		11	20	20	12		DPS B
SPARE		13	20	20	14		SPARE
SPARE		15	20	60	16		SPARE
SPARE		17	20	60	18		SPARE
MS3BI		19	20	60	20		CODEX EO
FEI A OUTLET		21	20	60	22		FEI B OUTLET
DPS A OUTLET		23	20	60	24		DPS B OUTLET
CODEX OUTLETS		25	20	60	26		UPS RECEPTACLE
EPMS UPS		27	20	20	28		BANDWIDTH MANAGER STRIP A
BANDWIDTH MANAGER STRIP B		29	20	20	30		QUAD
SPACE		31	20	20	32		SPACE
SPACE		33	20	20	34		SPACE
SPACE		35	20	20	36		SPACE
SPACE		37	20	20	38		SPACE
SPACE		39	20	20	40		SPACE
SPACE		41	20	20	42		SPACE
SPACE		43	20	20	44		SPACE

PANEL "ELPA"

VOLTAGE: 208/120 VOLT 3 PHASE - 4 WIRE

MOUNTING: ☐FLUSH ■SURFACE | MAINS: ☐LUGS ONLY --- AMP ■MAIN BREAKER 100 AMP | ■TOP ☐BOTTOM | NEUTRAL: ☐50% ■100%

LOCATION: RADAR EQUIPMENT ROOM | ALL BRANCH BREAKERS UL LISTED BREAKER IR 10000 RMS SYM. AMPS.

LOCATION	LOAD	NO.	A B C		NO.	LOAD	LOCATION
HVAC CONTROL	**NOTE 2**	1	20	20	2		FAX & BATHROOM LIGHTS
SPARE		3	20	20	4		MANAGER OFFICE OUTLETS
SPARE		5	20	20	6		MNGR.OFF.RECPT& WALK LGTS
ASDE OUTLET		7	20	20	8		MANAGER OFFICE A/C
SPARE		9	20	20	10		MANAGER OFFICE A/C
BAND WIDTH MANAGER		11	20	20	12		MANAGER OFFICE HEAT
ASDE RU TWIST LOCK		13	20	20	14		MANAGER OFFICE HEAT
ASDE RU COMM		15	20	60	16		PANEL F
HEATERS - FAX AREA		17	20	60	18		PANEL F
SPARE		19	20	60	20		PANEL F
EF-1		21	20	60	22		SPARE
EF-1		23	20	60	24		SPARE
EF-1		25	20	60	26		SPARE
SPARE		27	20	20	28		SPARE
SPARE		29	20	20	30		SPARE
SPARE		31	20	20	32		SPARE
EG EXHAUST FAN		33	20	20	34		SPARE
SPARE		35	20	20	36		SPARE
SPARE		37	20	20	38		SPARE
SPARE		39	20	20	40		SPARE
MP MOTOROLA		41	20	20	42		SPARE

PANEL "ELPC"

VOLTAGE: 208/120 VOLT 2 PHASE - 3 WIRE

MOUNTING: ☐FLUSH ■SURFACE | MAINS: ☐LUGS ONLY --- AMP ■MAIN BREAKER 200 AMP | ■TOP ☐BOTTOM | NEUTRAL: ☐50% ■100%

LOCATION: UPS EQUIPMENT SHELTER | ALL BRANCH BREAKERS UL LISTED BREAKER IR 10000 RMS SYM. AMPS.

LOCATION	LOAD	NO.	A B C		NO.	LOAD	LOCATION
HVAC #1		1	35	35	2		HVAC #2
HVAC #1		3	35	35	4		HVAC #2
INTERIOR LIGHTS		5	15	20	6		INT. & E:T. RECEPT.
UPS AUX RELAY PANEL		7	20	--	8		SPACE
SPARE		9	--	--	10		SPACE
SPARE		11	--	--	12		SPACE
SPARE		13	--	--	14		SPACE
SPACE		15	--	--	16		SPACE
SPACE		17	--	--	18		SPACE
SPACE		19	--	--	20		SPACE
SPACE		21	--	--	22		SPACE
SPACE		23	--	--	24		SPACE
SPACE		25	--	--	26		SPACE
SPACE		27	--	--	28		SPACE
SPACE		29	--	--	30		SPACE
SPACE		31	--	--	32		SPACE
SPACE		33	--	--	34		SPACE
SPACE		35	--	--	36		SPACE
SPACE		37	--	--	38		SPACE
SPACE		39	--	--	40		SPACE
SPACE		41	--	--	42		SPACE
SPACE		43	--	--	44		SPACE

PANEL "ELPB"

VOLTAGE: 208/120 VOLT 3 PHASE - 4 WIRE

MOUNTING: ☐FLUSH ■SURFACE | MAINS: ■LUGS ONLY 100 AMP ☐MAIN BREAKER --- AMP | ■TOP ☐BOTTOM | NEUTRAL: ☐50% ■100%

LOCATION: ENGINE GENERATOR ROOM | ALL BRANCH BREAKERS UL LISTED BREAKER IR 10000 RMS SYM. AMPS.

LOCATION	LOAD	NO.	A B C		NO.	LOAD	LOCATION
GEN. ROOM RECEPTACLES		1	20	20	2		BATTERY CHARGER
LOAD BANK CONTROLLER		3	20	20	4		SPARE
OUTSIDE LIGHT (UPS SIDE)		5	20	20	6		DAY TANK
SPARE		7	20	20	8		SPARE
SPARE		9	20	20	10		SPARE
SPARE		11	20	20	12		SPARE
SPARE		13	20	20	14		SPARE
SPARE		15	20	60	16		EG BLOCK HEATER (208V)
SPARE		17	20	60	18		EG BLOCK HEATER (208V)
SPACE		19	20	60	20		SPARE
SPARE		21	20	60	22		SPARE
SPARE		23	20	60	24		SPARE
SPARE		25	20	60	26		SPARE
SPARE		27	20	20	28		SPARE
SPARE		29	20	20	30		SPARE

PANEL "MDP"

VOLTAGE: 480 VOLT 3 PHASE - 3 WIRE

MOUNTING: ☐FLUSH ■SURFACE | MAINS: ■LUGS ONLY 800 AMP ☐MAIN BREAKER --- AMP | ☐TOP ■BOTTOM | NEUTRAL: ☐50% ■100%

LOCATION: ENGINE GENERATOR ROOM | ALL BRANCH BREAKERS UL LISTED BREAKER IR 10000 RMS SYM. AMPS.

LOCATION	LOAD	NO.	A B C		NO.	LOAD	LOCATION
ESSENTIAL TRANSFORMER		1	175	175	2		UPS RECTIFIER
ESSENTIAL TRANSFORMER		3	175	175	4		UPS RECTIFIER
ESSENTIAL TRANSFORMER		5	175	175	6		UPS RECTIFIER
UPS MAINTENANCE BYPASS		7	175	175	8		UPS BYPASS
UPS MAINTENANCE BYPASS		9	175	175	10		UPS BYPASS
UPS MAINTENANCE BYPASS		11	175	175	12		UPS BYPASS
SPACE		13	--	--	14		SPACE
SPACE		15	--	--	16		SPACE
SPACE		17	--	--	18		SPACE
SPACE		19	--	--	20		SPACE
SPACE		21	--	--	22		SPACE
SPACE		23	--	--	24		SPACE

BID ALTERNATE # 1

NOTES:

1. REPLACE CUTLER-HAMMER 125A TRIP UNITS WITH NEW WESTINGHOUSE SERIES TRIPUNIT MODEL JT3 150T.
2. INSTALL CONDUIT AND CONDUCTORS FOR HVAC CONTROL PANEL LOCATION SHALL BE FIELD DETERMINED AND APPROVED BY COTR.

REV	APPROVED DATE	DESCRIPTION	JCN	FEDRE DATE
	03/27/2009	CONSTRUCTION, WP #8767 (GHB)	700006	08/11/2008

DEPARTMENT OF TRANSPORTATION
FEDERAL AVIATION ADMINISTRATION
ATO - TECHNICAL OPERATIONS — EASTERN SERVICE AREA

ASR
POWER SYSTEM ENHANCEMENT
UPS & E/G INSTALLATION
PANEL SCHEDULES FOR REFERENCE ONLY

BOSTON — LOGAN INTERNATIONAL AIRPORT — MA

SUBMITTED BY: D.HULL, PROJECT ENGINEER
APPROVED BY: G.NEVILLE, MGR. ENGINEERING - BOSTON
DESIGNED: DH | DRAWN: POD | CHECKED:
ISSUED BY: ENGINEERING SERVICES INFRASTRUCTURE
DATE: 03/27/2009 | JCN: 700006
DRAWING NO: BOS-700006-E008

ISSUED FOR: CONSTRUCTION

THIS DRAWING PRODUCED ON NEW ENGLAND REGION MICROSTATION SYSTEM

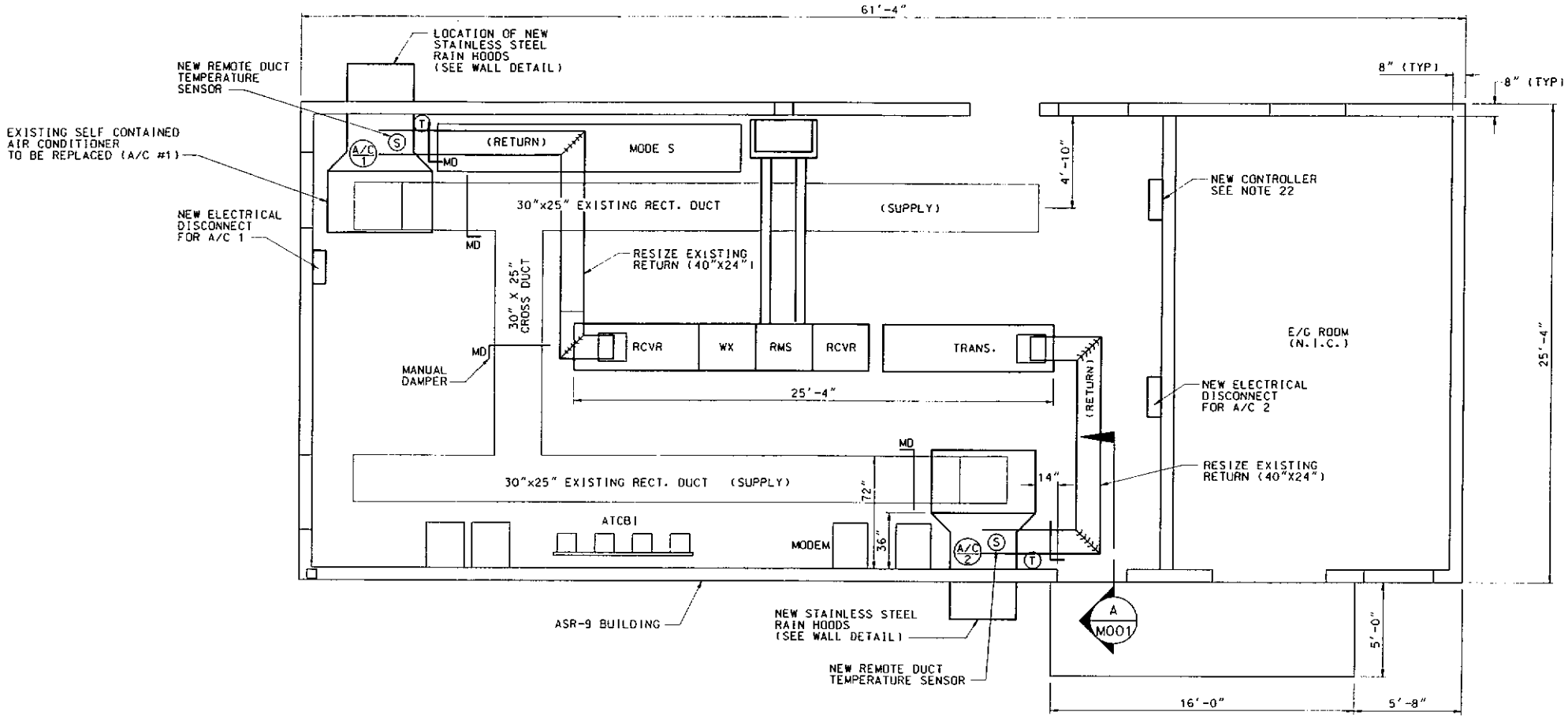

1 M001 EQUIPMENT LAYOUT A/C UNITS & DUCT WORK
SCALE: 1/4" = 1'-0"

NOTES:

1. BEFORE THE START OF ALL WORK, CONTRACTORS SHALL VERIFY THEIR SCOPE OF WORK, LOCATION, ELEVATION, AND SIZES OF ALL DUCTWORK, EQUIPMENT, AND ACCESSORIES THAT IS TO BE DEMOLISHED.
2. CONTRACTOR SHALL COORDINATE ALL WORK TO AVOID ANY AND ALL CONFLICTS WITH SUBCONTRACTORS AND EMPLOYEES WORKING IN THE FACILITY.
3. SOME NEW DUCTWORK AND NEW PIPING WILL BE REQUIRED. SOME OFFSETS MAY BE REQUIRED DURING INSTALLATION TO BEST SUITE THE CONDITIONS. THE DRAWINGS ARE DIAGRAMMATIC AND SHALL NOT BE SCALED TO DETERMINE THE EXACT LOCATIONS OF MECHANICAL WORK.
4. BALANCE THE AIR DISTRIBUTION SYSTEMS TO WITH IN 5% OF THE LISTED AIR QUANTITIES SHOWN IN THE CONSTRUCTION DOCUMENTS.
5. CONTRACTOR SHALL INSTALL NEW EQUIPMENT WITH MANUFACTURER'S REQUIRED CLEARANCE ACCESS AROUND ALL NEW EQUIPMENT.
6. CONTRACTOR SHALL MOUNT ALL WALL MOUNTED CONTROLLING DEVICES AT THE MINIMUM HEIGHTS REQUIRED BY THE APPROVED APPLICABLE CODES AND REGULATIONS.
7. CONTRACTOR SHALL INSTALL ALL APPROVED PIPE FITTINGS NECESSARY FOR THE CONTROL AND MEASURING DEVICES. PROVIDE ALL APPROVED DUCTWORK FITTING FOR CONTROL AND MEASURING DEVICES. ANY HOLES PUT INTO THE DUCTWORK NOT USED MUST BE PROPERLY PLUGGED.
8. ALL POWER, INTERLOCKING WIRE, AND ALL CONTROL WIRING SHALL BE INSTALLED UNDER DIVISION 26.
9. CONTRACTOR SHALL IMMEDIATELY REPORT TO THE COTR ALL OBSERVATIONS OF EXISTING CONDITIONS WHICH ARE DISCOVERED IN THE FACILITY THAT MAY PREVENT THE CORRECT INSTALLATION OF THE NEW MECHANICAL SYSTEM.
10. CONTRACTOR SHALL PROPERLY PATCH/SEAL ALL OPENING/PENETRATIONS IN EXISTING WALLS DUE TO DEMOLITION AND NEW WORK.
11. CONTRACTOR SHALL RECAPTURE ALL REFRIGERANT BEFORE REMOVING ACU-1 AND ACU-2.
12. CONTRACTOR SHALL PROPERLY REMOVE ALL DEMOLITION DEBRIS AND MATERIAL FROM WORK SITE.
13. INSTALLATION SHALL PROVIDE FOR READY ACCESS TO COILS, AND OTHER CONTROL DEVICES.
14. CONDENSATE DRAIN AND REFRIGERANT PIPING SHALL BE COPPER SUITABLE FOR APPLICATION
15. REFRIGERANT SUCTION AND LIQUID PIPING SIZE SHALL BE PER THE AC UNIT MANUFACTURER'S RECOMMENDATION.
16. CONNECT UNIT SMOKE DETECTION TO EXISTING BUILDING FIRE ALARM SYSTEM.
17. GALVANIZED STEEL DUCT WORK SHALL BE INSULATED WITH 1 1/2" THICK FIBERGLASS BLANKET WITH VAPOR BARRIER OF HEAVY DUTY FOIL SCRIM KRAFT.
18. INSULATE CONDENSATE DRAIN PIPING WITH 1/2" THICK FIBERGLASS INSULATION WITH FACTORY APPLIED REINFORCED ALUMINUM FOIL VAPOR BARRIER, WHITE ALL SERVICE JACKET AND SELF SEALING LAP.
19. NO MECHANICAL WORK IS TO BE DONE IN THE ENGINE GENERATOR ROOM.
20. CONTRACTOR SHALL USE A PROFESSIONAL RIGGER FOR RIGGING OF ALL EQUIPMENT.
21. ALL EQUIPMENT SHALL BE STORED INSIDE AND NOT EXPOSED TO ANY WEATHER CONDITIONS UNTIL INSTALLATION.
22. PROVIDE CONTROL SYSTEM THAT WILL ALLOW FOR LEAD LAG CONTROL OR RUNNING BOTH UNITS AT THE SAME TIME. CONTROL SYSTEM SHALL ALSO BE REQUIRED TO DISPLAY EACH ACU'S REFRIGERANT PRESSURE AND CURRENT DRAW. CONTROL SYSTEM SHALL ALSO CONTROL LOW AMBIENT DAMPERS VIA CONDENSER COIL TEMPERATURE.
23. PROVIDE AND INSTALL WELDED EXOTHERMIC CONNECTION TO EXISTING COUNTERPOISE VIA 4/0 COPPER CONDUCTORS. CONNECTIONS TO EACH HOOD SHALL BE MADE WITH TIN PLATED BURNDY (OR APPROVED EQUAL) TERMINATION LUGS. ALL GROUNDING SHALL BE IN ACCORDANCE WITH FAA STANDARD 19E. CONDUCTORS SHALL BE IN PVC PIPE FROM COUNTER POISE TO TERMINATION AT HOOD.

LEGEND:

- (T) THERMOSTAT
- (S) DUCT SENSOR
- (A/C #) AIR CONDITIONER UNIT NUMBER

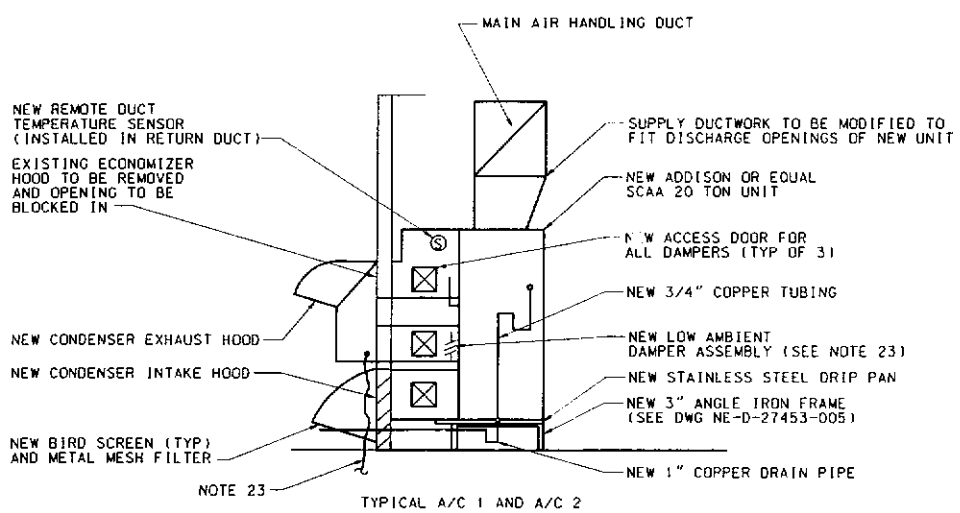

A M001 SECTION (TYP FOR BOTH UNITS)
NOT TO SCALE

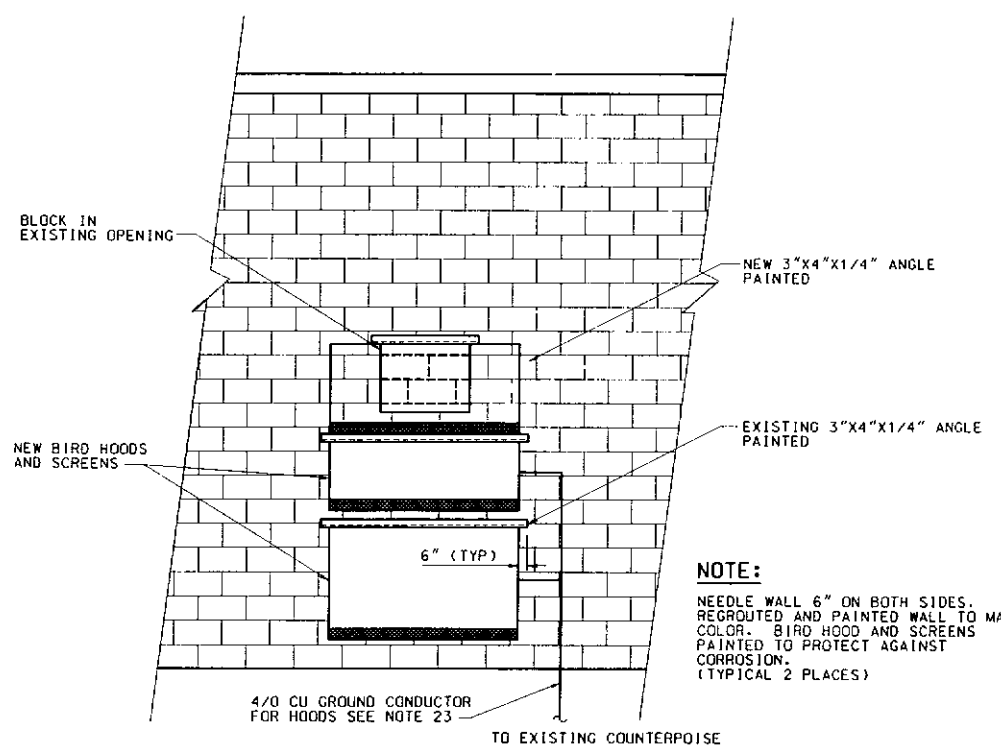

B M001 WALL SECTION
NOT TO SCALE

NOTE:

NEEDLE WALL 6" ON BOTH SIDES. REGROUTED AND PAINTED WALL TO MATCH COLOR. BIRD HOOD AND SCREENS PAINTED TO PROTECT AGAINST CORROSION. (TYPICAL 2 PLACES)

4' 0 4' 8'
SCALE: 1/4" = 1'-0"

REV	APPROVED DATE	DESCRIPTION	JCN	REQUIRE DATE	APVD
	03/27/2009	CONSTRUCTION, WR #8767 (GHB)	700006	2/11/2008	

DEPARTMENT OF TRANSPORTATION
FEDERAL AVIATION ADMINISTRATION
ATO - TECHNICAL OPERATIONS EASTERN SERVICE AREA

ASR
POWER SYSTEM ENCHANCEMENT
NEW HVAC EQUIPMENT

BOSTON LOGAN INTERNATIONAL AIRPORT MA

REVIEWED BY
SUBMITTED BY B.LUQUETTE
PROJECT ENGINEER
DESIGNED DH
DRAWN GHB
CHECKED
ISSUED BY ENGINEERING SERVICES INFRASTRUCTURE
APPROVED BY G.NEVILLE
MGR: ENGINEERING - BOSTON
DATE 03/27/2009 JCN 700006
DRAWING NO BOS-700006-M001 REV

ISSUED FOR: CONSTRUCTION

THIS DRAWING PRODUCED ON NEW ENGLAND REGION MICROSTATION SYSTEM

AIR CONDITIONING UNIT SCHEDULE

EQUIPMENT NUMBER	MFR	MODEL & TYPE	LOCATION	DISCHARGE	CAPACITY (BTUH)		INDOOR FAN DATA				MOTOR DATA			FILTER DATA		
					SENSIBLE	TOTAL	TYPE	CFM	EXT. S.P. (IN H_2O)	RPM	B.H.P.	RPM	ELECT.	TYPE	NUMBER	SIZE (IN.)
ACU-1 ACU-2	ADDISON	VCP-240-L-3-3-C	BOSTON ASR-9	VERTICAL DISCHARGE	80°/67° 278.522 BTU/H	80°/67° 211.126 BTU/H	CENTRIFUGAL FAN	8.000	1.2" W.G.	810	3.4	—	208V -230V 3Φ	2" PLEATED	1	—

AIR CONDITIONING UNIT SCHEDULE (CONT.)

ELECTRICAL DATA									CONTROLS			
NOMINAL INPUT	COMPRESSORS			OUTDOOR FAN		INDOOR FAN		HEATERS	UNIT	HEAD PRESSURE	COMPRESSOR	REMARKS
	QTY	RLA	LRA	QTY	FLA	H.P.	FLA					
208V 3Φ 60HZ	2			—	— EA	5.0	13.4	NONE			SEQUENCING AND LOCK-OUT	HERGITE CONTROL ON ALL COILS PAINTED UNIT LOW PRESSURE SWITCH REFRIG. RELIEF VALVE ANTI-CYCLE TIMES

BID ALTERNATE #1

ACU NOTES:

1. PROVIDE CORROSION CONTROL COATING ON ALL COILS AND CABINET.
2. UNIT SHALL HAVE LOW AMBIENT CONTROL.
3. MOTORS SHALL BE HIGH EFFICIENCY TYPE.
4. PROVIDE CLOGGED FILTER INDICATOR.
5. REFER TO SPECIFICATION DIVISION 23 30 00 FOR ALL OPTIONS.

HOOD NOTES:

1. HOODS SHALL BE FABRICATED FROM 10 GA. 304 STAINLESS STEEL
2. CONTRACTOR SHALL SUBMIT SHOP DRAWINGS PRIOR TO FABRICATION OF HOODS FOR APPROVAL
3. HOODS SHALL BE INSTALLED WITH REMOVABLE BIRD AND INSECT SCREENS

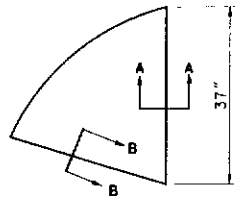

SIDE

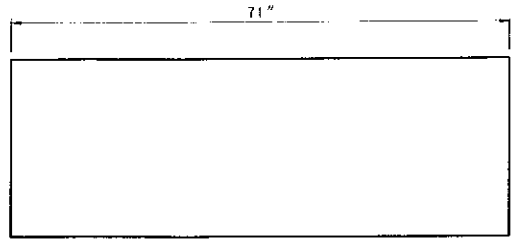

FRONT

INTAKE HOOD
NOT TO SCALE

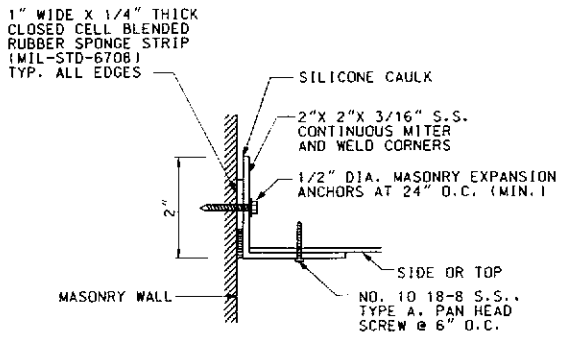

A / M002 SECTION
NOT TO SCALE

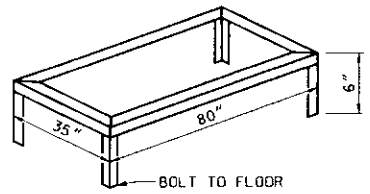

3"X3"X3/8" ANGLE IRON FRAME
(SUBMIT SHOP DRAWING FOR APPROVAL)

FLOOR A/C SUPPORT DETAIL
NOT TO SCALE

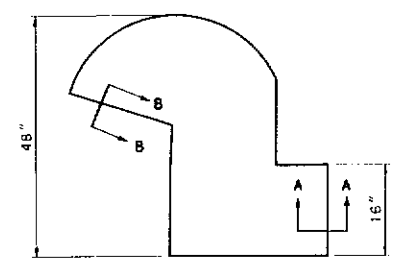

SIDE

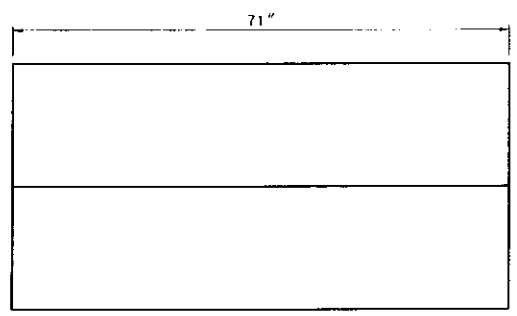

FRONT

CONDENSER EXHAUST HOOD
NOT TO SCALE

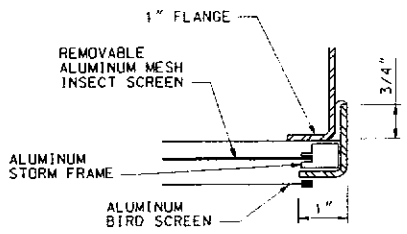

B / M002 SCREEN - SECTION
NOT TO SCALE

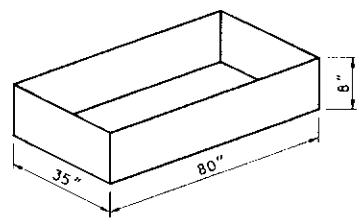

STAINLESS STEEL DRIP PAN
NOT TO SCALE

16 GA 316 STAINLESS STEEL
(SUBMIT SHOP DRAWING FOR APPROVAL)
SEAMS SHALL BE WELDED.

REV	APPROVED DATE	DESCRIPTION	JCN	REDLINE DATE	APVD
	03/27/2009	CONSTRUCTION, WR #8767 (GHB)	700006	12/11/2008	

DEPARTMENT OF TRANSPORTATION
FEDERAL AVIATION ADMINISTRATION
ATO - TECHNICAL OPERATIONS — EASTERN SERVICE AREA

ASR

POWER SYSTEM ENCHANCEMENT
NEW HVAC EQUIPMENT
EQUIPMENT SCHEDULES

BOSTON — LOGAN INTERNATIONAL AIRPORT — MA

REVIEWED BY
SUBMITTED BY: B. LUQUETTE — PROJECT ENGINEER
APPROVED BY: G. NEVILLE — MGR: ENGINEERING - BOSTON
DESIGNED: DH
DRAWN: GHB
CHECKED
ISSUED BY: ENGINEERING SERVICES INFRASTRUCTURE
DATE: 03/27/2009
JCN: 700006
DRAWING NO: BOS-700006-M002
REV

ISSUED FOR CONSTRUCTION

EDW Lvl: 700006 m002.dgn

THIS DRAWING PRODUCED ON NEW ENGLAND REGION MICROSTATION SYSTEM