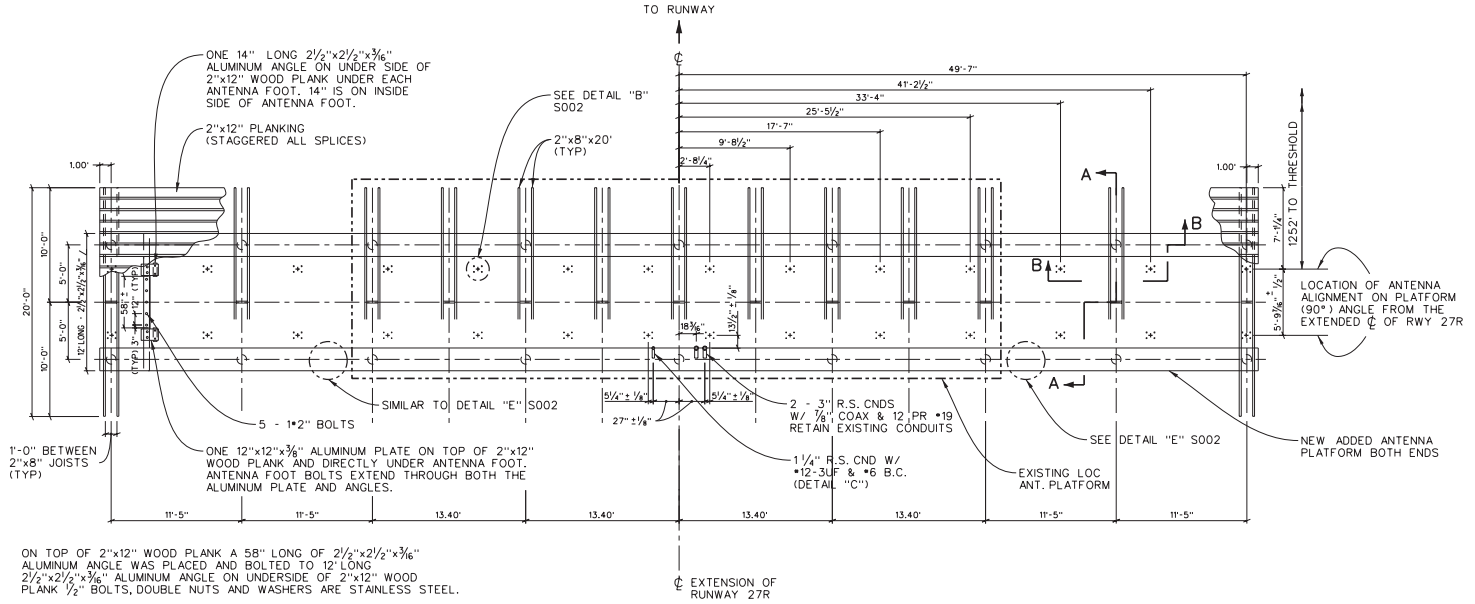

ON TOP OF 2"x12" WOOD PLANK A 58" LONG OF 2½"x2½"x3/16" ALUMINUM ANGLE WAS PLACED AND BOLTED TO 12' LONG 2½"x2½"x3/16" ALUMINUM ANGLE ON UNDERSIDE OF 2"x12" WOOD PLANK ½" BOLTS, DOUBLE NUTS AND WASHERS ARE STAINLESS STEEL.

FOUNDATION & PARTIAL DECK FRAMING PLAN

SCALE: 3/16"=1'-0"

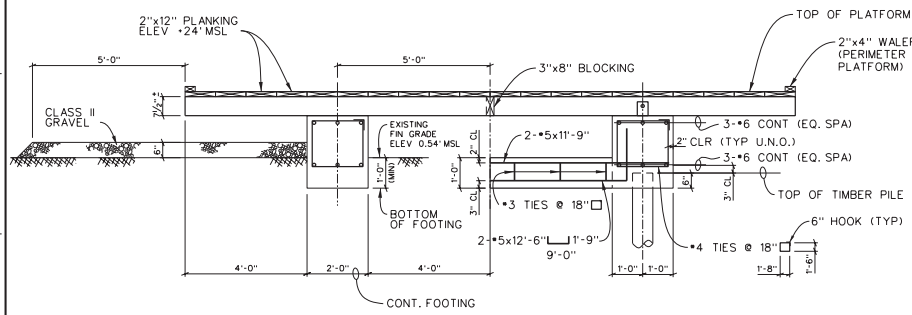

SECTION A-A

SCALE: 1/2" = 1'-0"

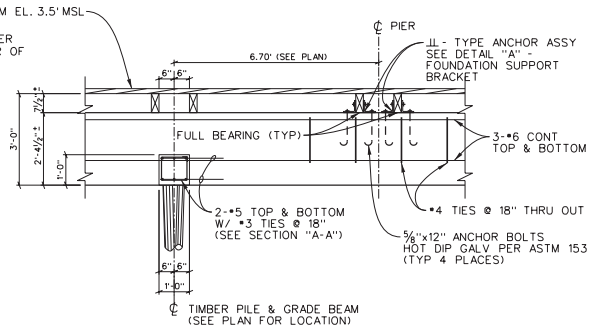

SECTION B-B

SCALE: 1/2" = 1'-0"

4' 0 4' 8' 12'
SCALE: 3/16" = 1'-0"

1' 0 1' 2' 5'
SCALE: 1/2" = 1'-0"

NOTE: DEMO-REFERENCE

STRUCTURAL NOTES:

1. GENERAL

EXCEPT WHERE MODIFIED OR AMPLIFIED IN THE SPECIFICATIONS, ALL WORK DETAILED HEREON SHALL BE CONSTRUCTED IN ACCORDANCE WITH THE FOLLOWING:

A. ACI STANDARD 318-71.

B. NATIONAL DESIGN SPECIFICATION FOR STRESS - GRADE LUMBER AND ITS FASTENINGS.

2. DESIGN CRITERIA

A. WIND LOAD - 125 MPH

B. PLATFORM LIVE LOAD - 50 PSF

3. MATERIAL

A. CONCRETE - CONCRETE SHALL HAVE A MINIMUM 28 DAY COMPRESSIVE STRENGTH OF 3000 PSI, WITH A MAXIMUM SLUMP OF 3 INCHES AND A MAXIMUM SIZE AGGREGATE OF 1 INCH.

B. REINFORCING STEEL DEFORMED NEW BILLET STEEL COMPLYING WITH ASTM A615-72 GRADE 40.

C. HARDWARE

(1) BOLTS SHALL CONFORM TO ASTM A-307, GRADE A.

(2) NUTS SHALL BE SELF-LOCKING STRUCTURAL TYPE "ANCO".

(3) ALL HARDWARE SHALL BE HOT-DIP GALVANIZED IN ACCORDANCE WITH ASTM A-153, AND STAINLESS STEEL WHERE NOTED.

(4) TOLERANCES - ALL ANCHOR BOLTS MUST BE LOCATED ± 1/8 OF DIMENSIONS GIVEN ON DETAIL B.

D. TIMBER

(1) ALL LUMBER SHALL BE DOUGLAS FIR, 1500f FOR LIGHT FRAMING, DENSE CONSTRUCTION GRADE FOR PLANKS AND STRINGERS.

(2) ALL LUMBER SHALL BE PRESSURE TREATED IN ACCORDANCE WITH FEDERAL SPECIFICATIONS TT-W-571.

(3) TOPS AND SIDES OF DECKS SHALL NOT BE PAINTED.

(4) TIMBER PILES SHALL CONFORM TO ASTM DESIGNATION D25-70.

(5) PILES SHALL BE DRIVEN TO A MINIMUM ALLOWABLE AXIAL LOAD OF 25 KIPS BY AN APPROVED FORMULA, BY LOAD TESTS OR BY INVESTIGATION BY AN APPROVED AGENCY.

SPECIAL NOTES:

THE PURPOSE OF THIS DRAWING TO SHOW EXISTING LOCALIZER STRUCTURE WITH EXTENDED PLATFORM ON BOTH ENDS.

REPAIR NOTES:

1. WATER BLAST THE EXISTING WOODEN DECK, PRIME AND PAINT TWO (2) COATS, COLOR BEIGE.
2. NAILDOWN LOOSE WOOD ON EXISTING DECK.
3. REPLACE EXISTING BROKEN WOOD ON EXTERIOR DECK.

REV	APPROVED DATE	DESCRIPTION	JCN	REDLINE DATE	APVD

DEPARTMENT OF TRANSPORTATION
FEDERAL AVIATION ADMINISTRATION
ATO - TECHNICAL OPERATIONS — WESTERN SERVICE AREA

ILS
METROPOLITAN OAKLAND INTERN'L AIRPORT
RUNWAY 27R ILS REPLACEMENT
LOCALIZER STRUCTURAL DETAILS

OAKLAND CA

REVIEWED BY	SUBMITTED BY: BILL JIA (DO NOT SIGN)	APPROVED BY: VINCENT G NGUYEN (DO NOT SIGN)	
	PROJECT ENGINEER	MGR: ENGINEERING - LA	
	DESIGNED BJ	ISSUED BY: ENGINEERING SERVICES NAVAIDS	DATE 05/03/2010 — JCN 808139
	DRAWN RC		DRAWING NO OAK-D-ILS27R-S001 — REV
	CHECKED BJ		

ISSUED FOR: CONSTRUCTION

DRAWING PRODUCED ON WSA MICROSTATION SYSTEM

EDM: oak-d-ils27r-s001.dgn

oak-d-ils27r-s001.dgn 8/27/2012 8:08:08 AM