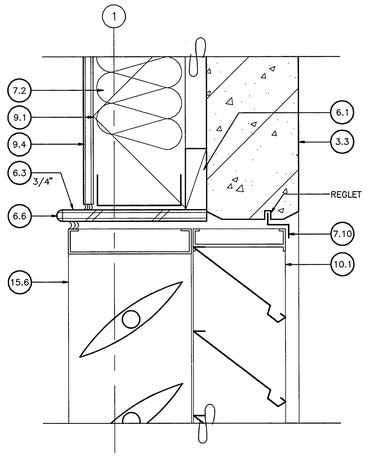

7 A14.1 A15.2 LOUVER AND DAMPER HEAD (JAMB SIM.)
SCALE: 3" = 1'-0"

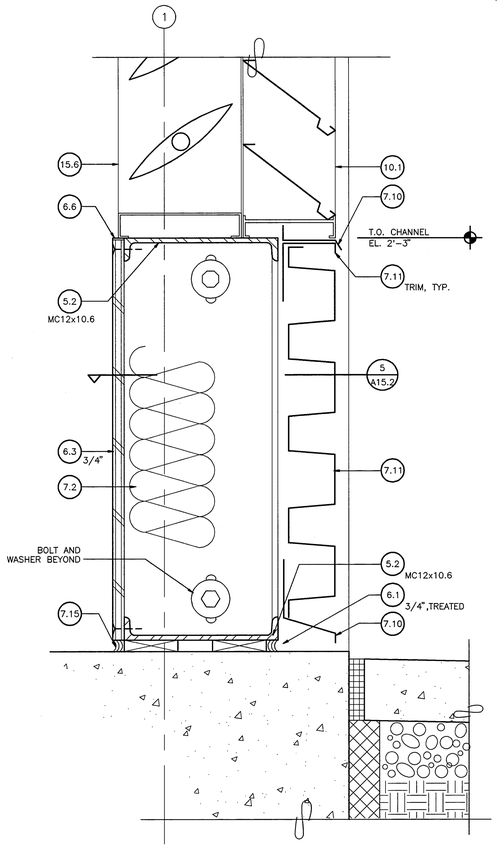

6 A14.1 A15.2 REMOVABLE LOUVER BASE
SCALE: 3" = 1'-0"

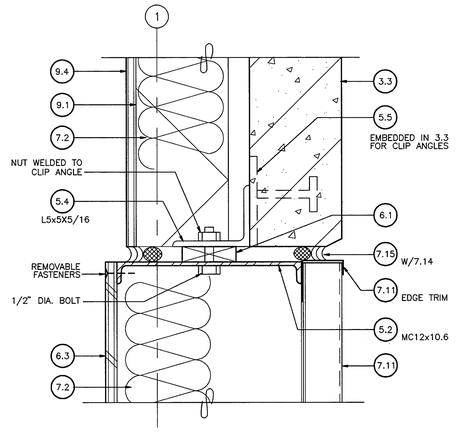

5 A14.2, A15.2 A15.2 JAMB AT REMOVABLE LOUVER BASE
SCALE: 3" = 1'-0"

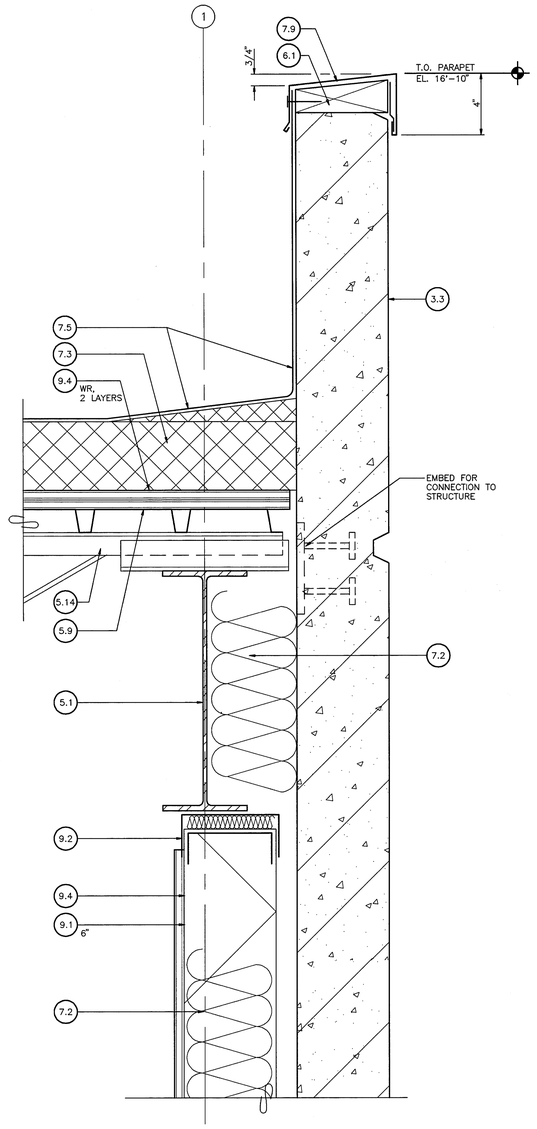

4 A14.2 A15.2 TOP OF WALL SECTION
SCALE: 3" = 1'-0"

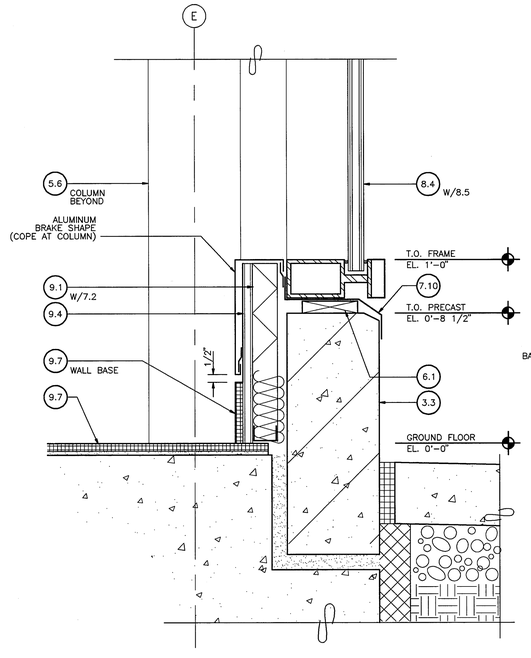

3 A14.2, A15.1 A15.2 SOUTH WINDOW-WALL SILL
SCALE: 3" = 1'-0"

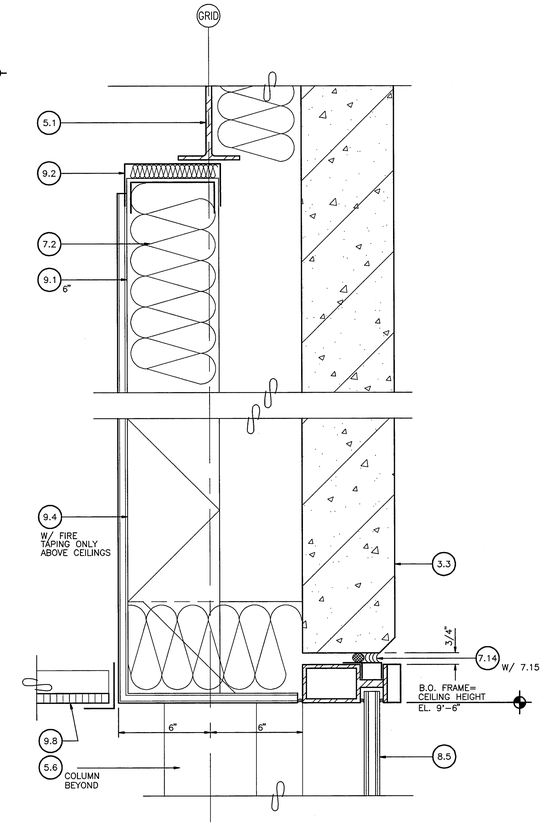

2 A14.1 A15.2 TYPICAL WINDOW HEAD
SCALE: 3" = 1'-0"

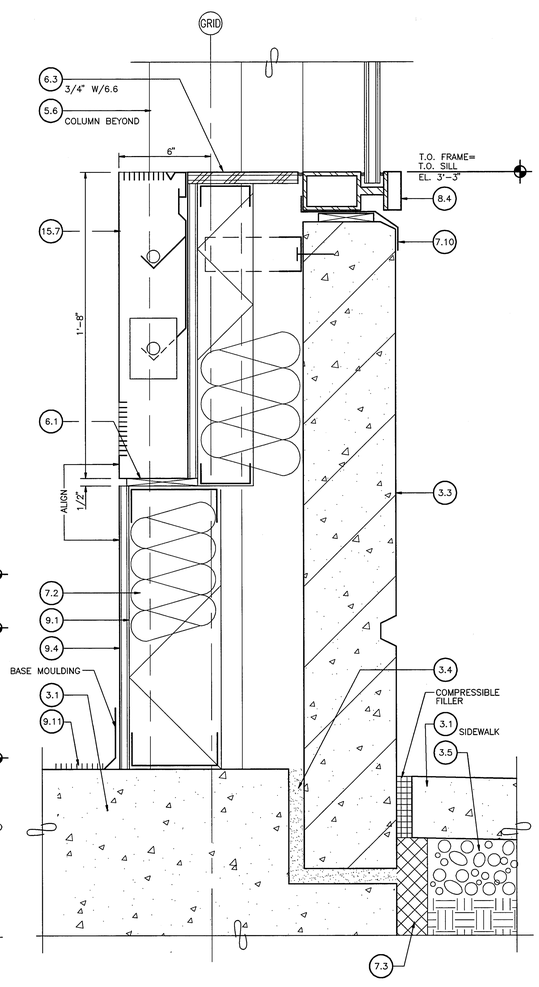

1 A14.1, A14.2, A15.1 A15.2 TYPICAL WINDOW-WALL SILL
SCALE: 3" = 1'-0"

KEYNOTES

DIVISION 3

3.1 CAST-IN-PLACE CONCRETE
3.2 CONCRETE FILL
3.3 PRECAST CONCRETE
3.4 GROUT
3.5 DRAINABLE FILL

DIVISION 5

5.1 STEEL WIDE FLANGE
5.2 STEEL CHANNEL
5.3 STEEL TEE
5.4 STEEL ANGLE
5.5 STEEL PLATE
5.6 STEEL TUBE
5.7 STEEL ROD
5.8 STEEL PIPE
5.9 METAL DECK
5.10 DECK EDGE FORM
5.11 SHEET METAL
5.12 METAL LADDER
5.13 METAL GUARDRAIL
5.14 OPEN WEB STEEL JOIST
5.15 EXPANSION JOINT ASSEMBLY

DIVISION 6

6.1 WOOD BLOCKING
6.2 SHIM
6.3 PLYWOOD
6.4 PLASTIC LAMINATE
6.5 HARDWOOD TRIM
6.6 HARDWOOD VENEER

DIVISION 7

7.1 VAPOR BARRIER
7.2 BATT INSULATION
7.3 RIGID INSULATION
7.4 FLUID APPLIED WATERPROOFING
7.5 MEMBRANE ROOFING
7.6 TRAFFIC COATING
7.7 ROOF WALKWAY PADS
7.8 ROOF HATCH
7.9 PREFORMED METAL COPING
7.10 METAL FLASHING
7.11 PROFILED METAL PANEL
7.12 INSULATED METAL PANEL
7.13 METAL GLAZING PANEL
7.14 JOINT FILLER
7.15 SEALANT
7.16 CEMENTITIOUS FIREPROOFING
7.17 FIRESTOPPING

DIVISION 8

8.1 STEEL DOOR
8.2 STEEL FRAME
8.3 ACCESS DOOR
8.4 ALUMINUM CURTAIN WALL
8.5 INSULATED GLAZING
8.6 TEMPERED GLASS
8.7 COILING OVERHEAD DOOR

DIVISION 9

9.1 METAL STUD
9.2 DEFLECTION TRACK
9.3 HAT CHANNEL
9.4 5/8" GYPSUM BOARD
9.5 1" GYPSUM SHAFT-LINER
9.6 GWB CONTROL JOINT
9.7 CERAMIC TILE
9.8 SUSPENDED ACOUSTICAL TILE CEILING
9.9 PAINT
9.10 RESILIENT FLOORING
9.11 CARPET

DIVISION 10

10.1 METAL LOUVER
10.2 TOILET PARTITION
10.3 FIRE VALVE CABINET
10.4 FIRE EXTINGUISHER
10.5 METAL LOCKERS
10.6 RAISED ACCESS FLOOR

DIVISION 12

12.1 WINDOW SHADES
12.2 WINDOW BLINDS
12.3 FOOT GRILLE

DIVISION 13

13.1 MICROWAVE TRANSPARENT FABRIC

DIVISION 14

14.1 GEARED TRACTION ELEVATOR
14.2 MOTORIZED HOIST

DIVISION 15

15.1 ROOF DRAIN
15.2 FLOOR DRAIN
15.3 LINEAR DIFFUSER
15.4 HVAC DIFFUSER, GRILLE OR REGISTER
15.5 DRINKING FOUNTAIN
15.6 MOTORIZED DAMPER
15.7 FIN-TUBE RADIATOR
15.8 ROOF-TOP HVAC EQUIPMENT

DIVISION 16

16.1 LIGHT FIXTURE
16.2 AIR TERMINAL
16.3 ANTENNA MOUNT
16.4 OBSTRUCTION LIGHT
16.5 RACEWAY

6" 3" 0 6"
SCALE: 3" = 1'-0"

REGISTERED ARCHITECT
BARTON A. DRAKE
BELLEVUE WASHINGTON
5180
STATE OF OREGON
7/10/96

REV	DATE	DESCRIPTION	CHECK	APRV'D

HNTB
ARCHITECTS ENGINEERS PLANNERS
OREGON ARCHITECTURE P.C.

CONSULTANT

DEPARTMENT OF TRANSPORTATION
FEDERAL AVIATION ADMINISTRATION
NORTHWEST MOUNTAIN REGION - SEATTLE, WASHINGTON

PORTLAND, OREGON
PORTLAND INTERNATIONAL AIRPORT

BASE BUILDING

EXTERIOR DETAILS

REVIEWED BY	SUBMITTED BY		APPROVED BY
ANM-510 CD			
ANM-710 TT	PROJECT ENGINEER: ANM-450T2		SUPERVISOR: ANM-450T2
PDX SSC JP	DESIGNED SSC	ISSUED BY AIRWAY FACILITIES DIVISION ANM-400	DATE 7/10/96
PHW SMO JP	DRAWN DVP		DRAWING NO.
SEA ADO WW	CHECKED BAD		NME-600-41518-A15.2

HNTB JOB NO. 20065-DS-001-002