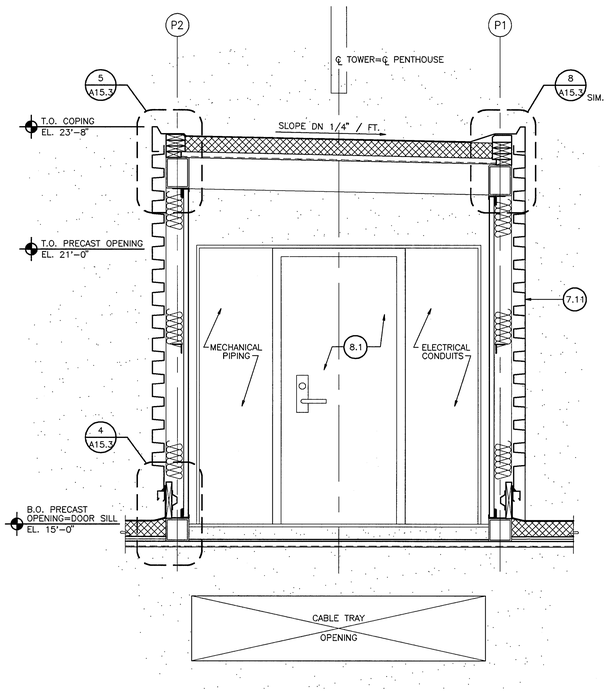


6 A12.2, A14.2 PENTHOUSE SECTION (FACING TOWER)
SCALE: 3/4" = 1'-0"

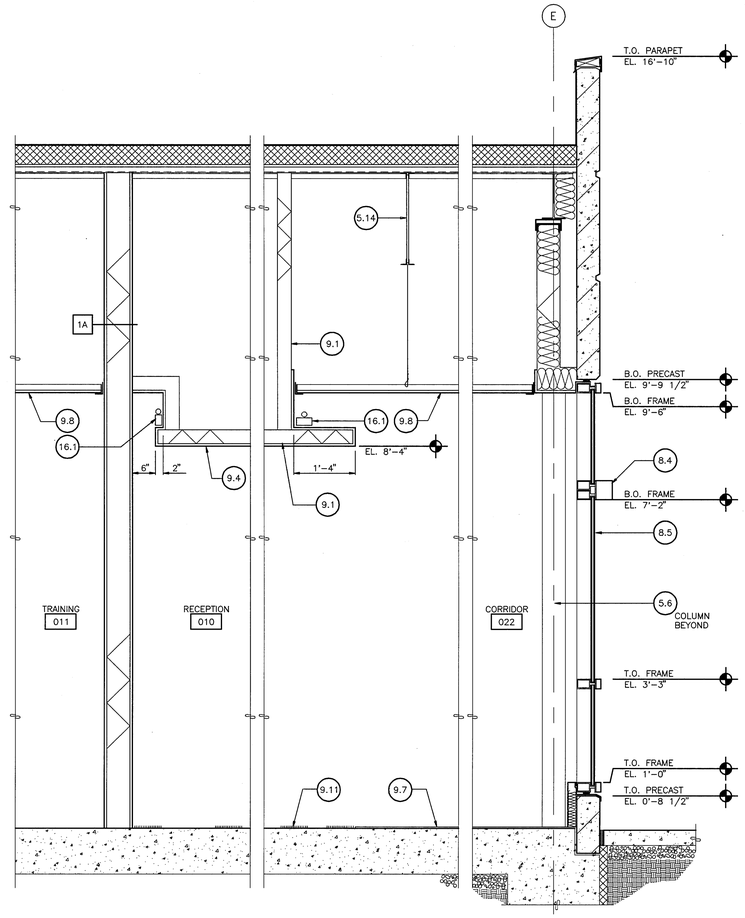


4 A12.1, A13.2, A14.2 SOUTH WALL SECTION AT RECEPTION
SCALE: 3/4" = 1'-0"

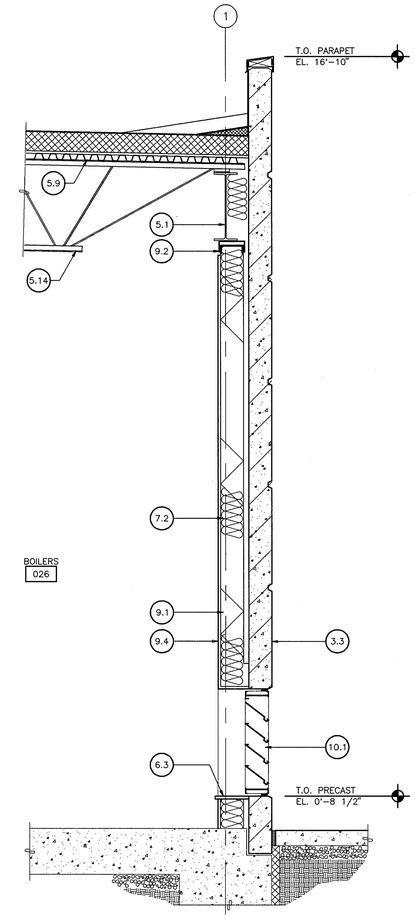


2 A12.1, A14.2 WEST WALL SECTION AT BOILER ROOM
SCALE: 3/4" = 1'-0"

## KEYNOTES

DIVISION 3

3.1 CAST-IN-PLACE CONCRETE
3.2 CONCRETE FILL
3.3 PRECAST CONCRETE
3.4 GROUT
3.5 DRAINABLE FILL

DIVISION 5

5.1 STEEL WIDE FLANGE
5.2 STEEL CHANNEL
5.3 STEEL TEE
5.4 STEEL ANGLE
5.5 STEEL PLATE
5.6 STEEL TUBE
5.7 STEEL ROD
5.8 STEEL PIPE
5.9 METAL DECK
5.10 DECK EDGE FORM
5.11 SHEET METAL
5.12 METAL LADDER
5.13 METAL GUARDRAIL
5.14 OPEN WEB STEEL JOIST
5.15 EXPANSION JOINT ASSEMBLY

DIVISION 6

6.1 WOOD BLOCKING
6.2 SHIM
6.3 PLYWOOD
6.4 PLASTIC LAMINATE
6.5 HARDWOOD TRIM
6.6 HARDWOOD VENEER

DIVISION 7

7.1 VAPOR BARRIER
7.2 BATT INSULATION
7.3 RIGID INSULATION
7.4 FLUID APPLIED WATERPROOFING
7.5 MEMBRANE ROOFING
7.6 TRAFFIC COATING
7.7 ROOF WALKWAY PADS
7.8 ROOF HATCH
7.9 PREFORMED METAL COPING
7.10 METAL FLASHING
7.11 PROFILED METAL PANEL
7.12 INSULATED METAL PANEL
7.13 METAL GLAZING PANEL
7.14 JOINT FILLER
7.15 SEALANT
7.16 CEMENTITIOUS FIREPROOFING
7.17 FIRESTOPPING

DIVISION 8

8.1 STEEL DOOR
8.2 STEEL FRAME
8.3 ACCESS DOOR
8.4 ALUMINUM CURTAIN WALL
8.5 INSULATED GLAZING
8.6 TEMPERED GLASS
8.7 COILING OVERHEAD DOOR

DIVISION 9

9.1 METAL STUD
9.2 DEFLECTION TRACK
9.3 HAT CHANNEL
9.4 5/8" GYPSUM BOARD
9.5 1" GYPSUM SHAFT-LINER
9.6 GWB CONTROL JOINT
9.7 CERAMIC TILE
9.8 SUSPENDED ACOUSTICAL TILE CEILING
9.9 PAINT
9.10 RESILIENT FLOORING
9.11 CARPET

DIVISION 10

10.1 METAL LOUVER
10.2 TOILET PARTITION
10.3 FIRE VALVE CABINET
10.4 FIRE EXTINGUISHER
10.5 METAL LOCKERS
10.6 RAISED ACCESS FLOOR

DIVISION 12

12.1 WINDOW SHADES
12.2 WINDOW BLINDS
12.3 FOOT GRILLE

DIVISION 13

13.1 MICROWAVE TRANSPARENT FABRIC

DIVISION 14

14.1 GEARED TRACTION ELEVATOR
14.2 MOTORIZED HOIST

DIVISION 15

15.1 ROOF DRAIN
15.2 FLOOR DRAIN
15.3 LINEAR DIFFUSER
15.4 HVAC DIFFUSER, GRILLE OR REGISTER
15.5 DRINKING FOUNTAIN
15.6 MOTORIZED DAMPER
15.7 FIN-TUBE RADIATOR
15.8 ROOF-TOP HVAC EQUIPMENT

DIVISION 16

16.1 LIGHT FIXTURE
16.2 AIR TERMINAL
16.3 ANTENNA MOUNT
16.4 OBSTRUCTION LIGHT
16.5 RACEWAY

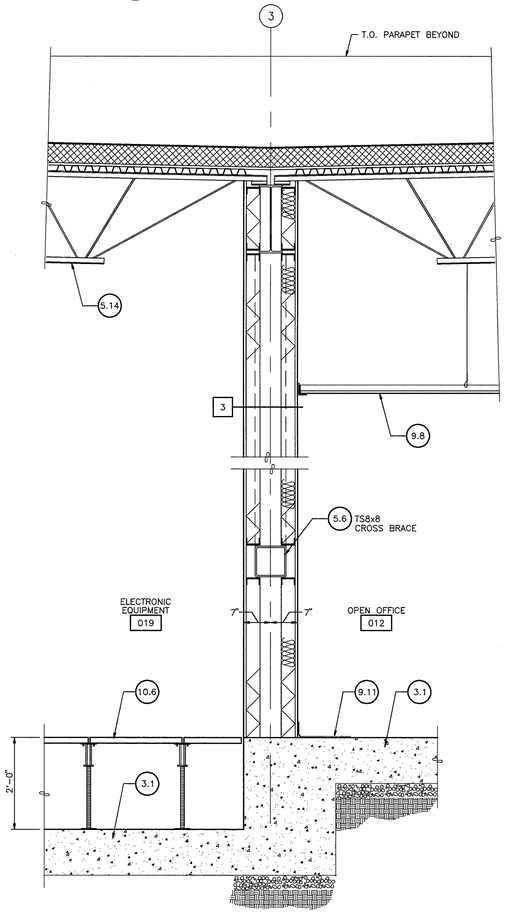


5 A12.1, A13.2, A14.2 INTERIOR WALL SECTION AT ACCESS FLOOR
SCALE: 3/4" = 1'-0"

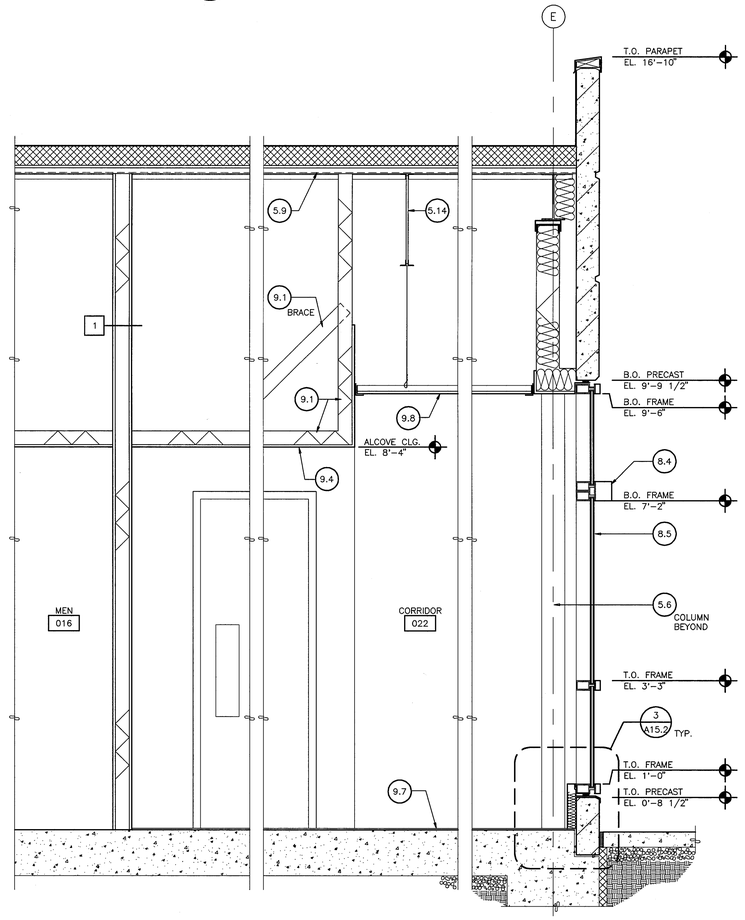


3 A12.1, A14.2 SOUTH WALL SECTION AT CORRIDOR
SCALE: 3/4" = 1'-0"

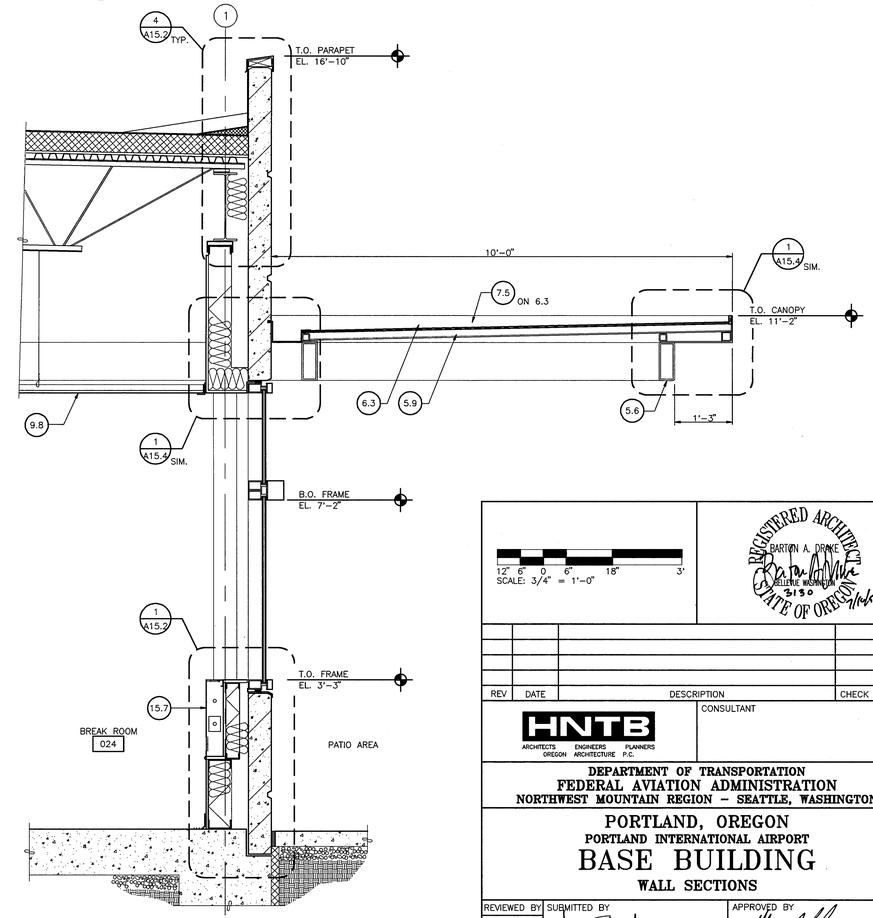


1 A12.1, A14.2 WEST WALL SECTION AT PATIO
SCALE: 3/4" = 1'-0"

12" 6" 0 6" 18" 3'
SCALE: 3/4" = 1'-0"

REGISTERED ARCHITECT BARTON A. DRAKE 5150 BELLEVUE WASHINGTON STATE OF OREGON

| REV | DATE | DESCRIPTION | CHECK | APRV'D |
|---|---|---|---|---|
| | | | | |

HNTB ARCHITECTS ENGINEERS PLANNERS OREGON ARCHITECTURE P.C.

CONSULTANT

DEPARTMENT OF TRANSPORTATION
FEDERAL AVIATION ADMINISTRATION
NORTHWEST MOUNTAIN REGION – SEATTLE, WASHINGTON

PORTLAND, OREGON
PORTLAND INTERNATIONAL AIRPORT

# BASE BUILDING

WALL SECTIONS

| REVIEWED BY | SUBMITTED BY | APPROVED BY |
|---|---|---|
| ANM-510 CP | | |
| ANM-710 TT | PROJECT ENGINEER: ANM-450T2 | SUPERVISOR: ANM-450T2 |
| PDX SSK JP | DESIGNED SSC | DATE 7/10/96 |
| PNW SMQ JP | DRAWN DVP | ISSUED BY AIRWAY FACILITIES DIVISION ANM-400 |
| SEA ADD WJ | CHECKED BAD | DRAWING NO. NME-600-41518-A14.2 |

HNTB JOB NO. 20065-DS-001-002