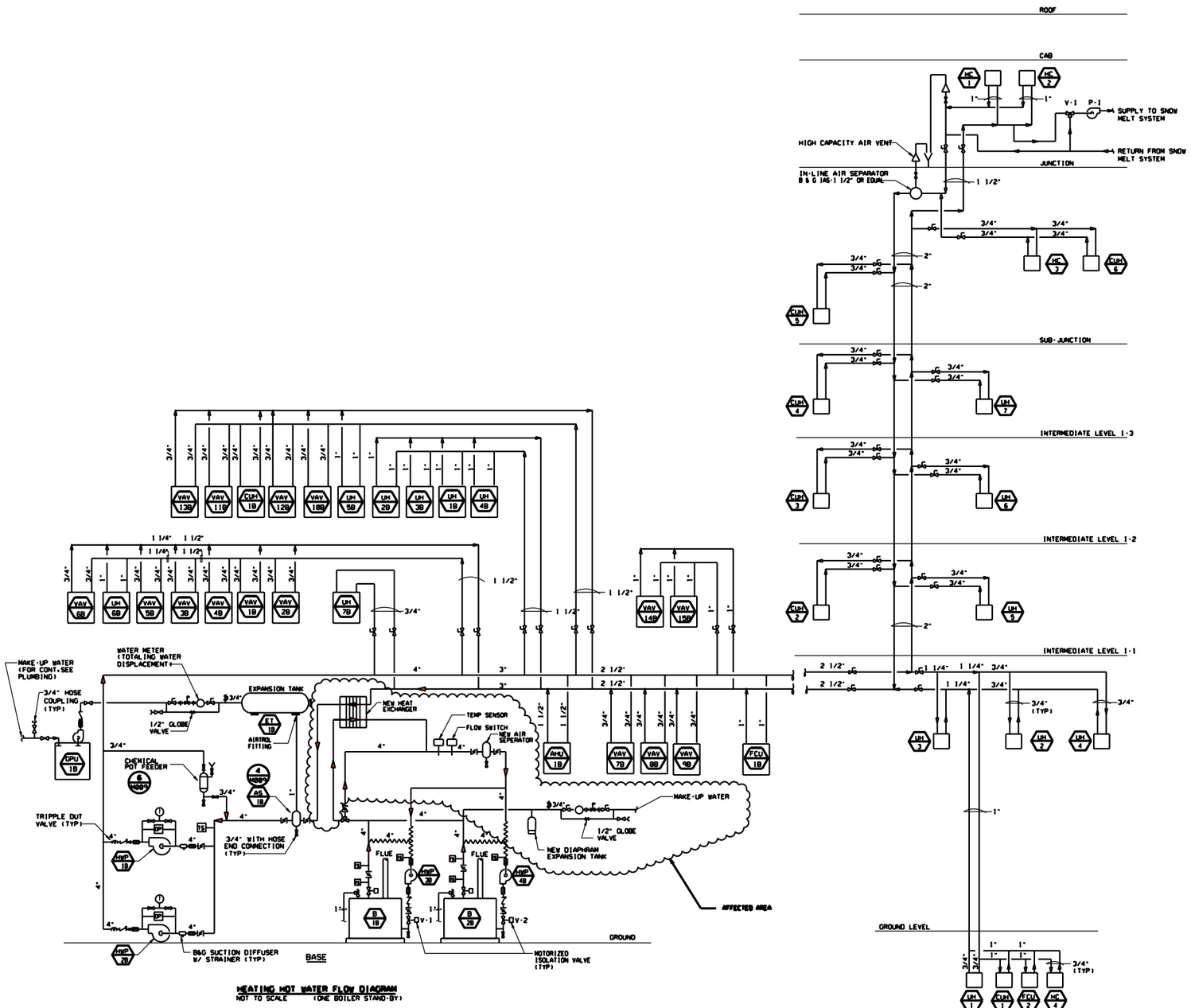

HEATING HOT WATER FLOW DIAGRAM
NOT TO SCALE (ONE BOILER STAND-BY)

FOR OFFICIAL USE ONLY
PUBLIC AVAILABILITY TO BE DETERMINED UNDER 5 USC 552

REV	APPROVED DATE	DESCRIPTION	JCN	REDLINE DATE	APVD

DEPARTMENT OF TRANSPORTATION
FEDERAL AVIATION ADMINISTRATION
NORTHWEST MOUNTAIN REGION — SEATTLE, WA

ATCT
MODIFIED HX HOT WATER DIAGRAM

BILLINGS — BILLINGS LOGAN INTERNATIONAL AIRPORT — MT

REVIEWED BY	SUBMITTED BY: JONATHAN O. SALTER (DO NOT SIGN), PROJECT ENGINEER	APPROVED BY: RAYMOND N. LAWRENCE (DO NOT SIGN), INFRASTRUCTURE SUPPORT CTR-SEA
	DESIGNED	ISSUED BY: AIRWAY FACILITIES ANM-400
	DRAWN	DATE --/--/2011 JCN
	CHECKED	DRAWING NO BIL-D-ATCT-A--- REV -

ISSUED FOR/PROJECT RECORD DRAWING

EDM:YKM-D-ATCT-A013.DGN

DIAG REVISED 1.DGN
3/29/2011 12:29:06 PM QUEST

DRAWING PRODUCED ON ANM REGION MICROSTATION SYSTEM

APPROVAL