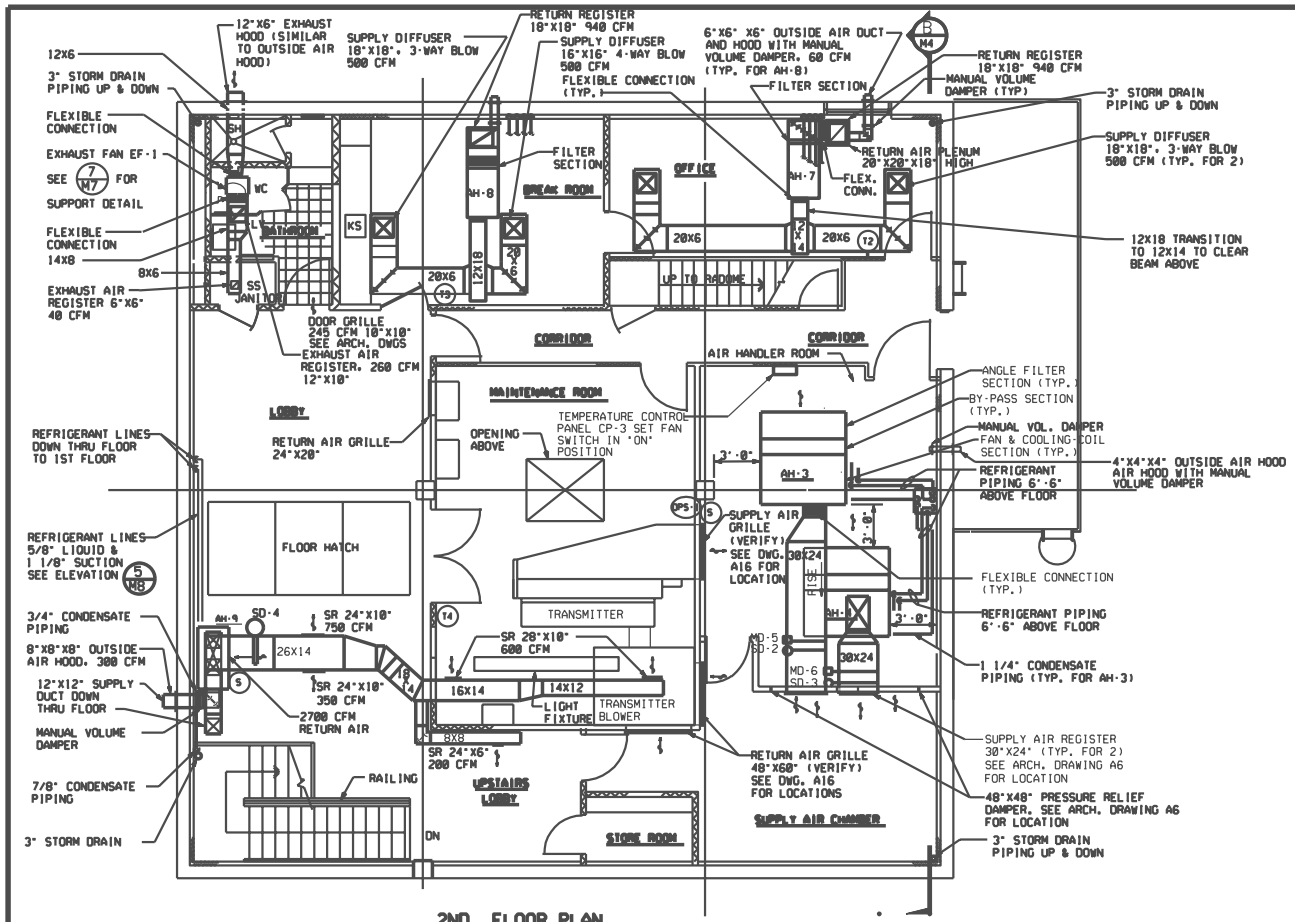

2ND. FLOOR PLAN

SCALE: 1/4" = 1'-0"

PLUMBING EQUIPMENT SCHEDULE

TAG.	DESCRIPTION	REMARKS
WH-1,2 3 & 4	INSTANTANEOUS ELECTRIC WATER HEATER. FLOW ACTIVATED AND WITH STAINLESS STEEL HEATING COILS. HEATER SHALL BE CAPABLE OF HEATING 1 GPM WATER THROUGH A TEMPERATURE RISE OF 54°F. CHRONOMITE MODEL S 80I. 208V. 1 PH. 38 AMPS OR APPROVED EQUAL.	
KS	1) SELF RIMMING. WHITE. SINGLE BOWL. 18"X18"X8 1/2" NOMINAL WITH 3 HOLES AND BASKET STRAINER. AMERICAN STANDARD SILHOUETTE 18" MODEL 7185.003.020 2) TWO HANDLE SINK FAUCET WITH SWIVEL GOOSENECK SPOUT. AMERICAN STANDARD AMARILIS 7490.000.002 WITH 172H HANDLES.	
SH	1) SHOWER DRAIN. HEAVY DUTY. FLAT FACE WITH CORROSION RESISTANT. SLOTTED BRONZE BODY. AND 2" CONNECTION MCMASTER CARR NO. 2705K1 OR APPROVED EQUAL. 2) SHOWER ONLY FITTINGS WITH ADJUSTABLE SPRAY SHOWER HEAD. FINISH SHALL BE POLISHED CHROME. AMERICAN STANDARD AMARYLIS 6520.000.002 WITH 372H HANDLES OR APPROVED EQUAL.	
WC	1) OFF THE FLOOR ELONGATED WATER CLOSET OF VITREOUS CHINA LESS SEAT. SIPHON JET FLUSHING ACTION TANK COVER LOCKING DEVICE AND AQUAGUARD LINER COLOR WHITE. AMERICAN STANDARD GLENWALL EL 3.5. FIXTURE NO. 2093.700.020 OR APPROVED EQUAL. 2) SEAT OF HEAVY DUTY SOLID PLASTIC. OPEN FRONT FOR ELONGATED WATER CLOSET OLSONITE NO. 95 OR APPROVED EQUAL. 3) WATER CLOSET SUPPORT JAY R. SMITH FIGURE 210-R-Y OR APPROVED EQUAL.	
LV	1) WALL HUNG LAVATORY OF VITREOUS CHINA. 20"X18" WITH FAUCET HOLES ON 4" CENTERS. INCLUDING WAL. WALL HANGER AMERICAN STANDARD LUCERNE 0355.012.020 OR APPROVED EQUAL. 2) LAVATORY FAUCET WITH LEVER HANDLES. GRID ASSEMBLY AND POLISHED CHROME FINISH. AMERICAN STANDARD 5402.172H OR APPROVED EQUAL.	
SS	1) SERVICE SINK. NOMINAL DIMENSIONS 24"X20" OF ENAMELED CAST IRON (INSIDE ONLY ENAMELED WITH RIM GUARD. WALL HANGER AND DRILLED BACK. AMERICAN STANDARD AKRON 7695. 018 OR APPROVED EQUAL. 2) P. TRAP 7798.176 OR APPROVED EQUAL. 3) FAUCET WITH VACUUM BREAKER 8340. 242 OR APPROVED EQUAL.	
2" CO 4" CO	CLEANOUT WITH LEAD SEAL PLUG AND COVER JAY R. SMITH 4422 OR APPR. EQUAL	
4" COTG	DUCO CAST IRON CLEANOUT AND DOUBLE FLANGED HOUSING WITH CAST IRON COVER WITH LIFTING DEVICE. JAY R. SMITH FIG. 4256.	
3" SD	3" DRAIN WITH DUCO CAST IRON BODY AND FLASHING COLLAR WITH ADJUSTABLE STRAINER HEAD. SQUARE TOP 6"X6". JAY R. SMITH FIG. 2010-BW THREADED CONNECTION OR APPROVED EQUAL.	

NOTES:

1) MOUNT AH-9 SMOKE DETECTOR INSIDE FILTER SECTION.

2) EAST PRESSURE RELIEF DAMPER SHALL OPEN FROM AIR HANDLER ROOM INTO SUPPLY AIR CHAMBER. WEST PRESSURE RELIEF DAMPER SHALL OPEN IN THE OPPOSITE DIRECTION. SET BOTH DAMPERS TO OPEN AT 0.25" WATER.

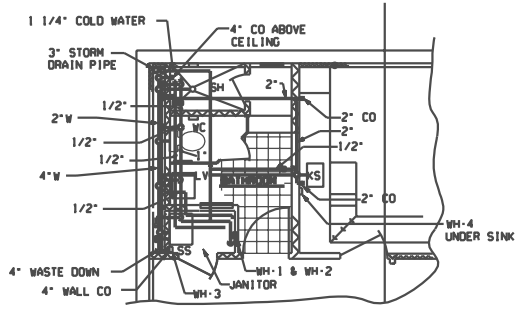

PARTIAL 2ND. FLOOR PLAN - PLUMBING

SCALE: 1/4"=1'-0"

RAYTHEON SERVICE COMPANY
WESTERN PACIFIC REGION
CONTINENTAL PARK, SUITE 2400
3601 AVIATION BLVD.
MANHATTAN BEACH, CALIFORNIA 90266
PHONE NO. (310) 297-2200

REV LTR	DATE	DESCRIPTION	TSSC	CHECKED	APPROVED
A	12/22/95	AS-BUILT			

DEPARTMENT OF TRANSPORTATION
FEDERAL AVIATION ADMINISTRATION
WESTERN PACIFIC REGION- LOS ANGELES, CALIFORNIA

MT. SANTA ROSA, GUAM

ARSR-4

2ND FLOOR PLANS AND PLUMBING EQUIPMENT SCHEDULE

REVIEWED BY: 453.24 / 453.2 / 460 / AFS / SFO
SUBMITTED BY: SUPVR. ENVIRON. ENGR. UNIT AWP-453.2
APPROVED BY: MGR: COMM. SURVEILLANCE & INTER-FACILITY PROGRAM SECTION AWP-453
DESIGNED BY: KT
ISSUED BY:
DATE: 5/27/94
DRAWN BY: PW/KR/MS
CHECKED BY: PR
DRAWING NO.: WP-D-570-41829-N2
REV LTR:
PROJECT NUMBER: R-AWP-91-0092-F
TSSC REFERENCE NUMBER: