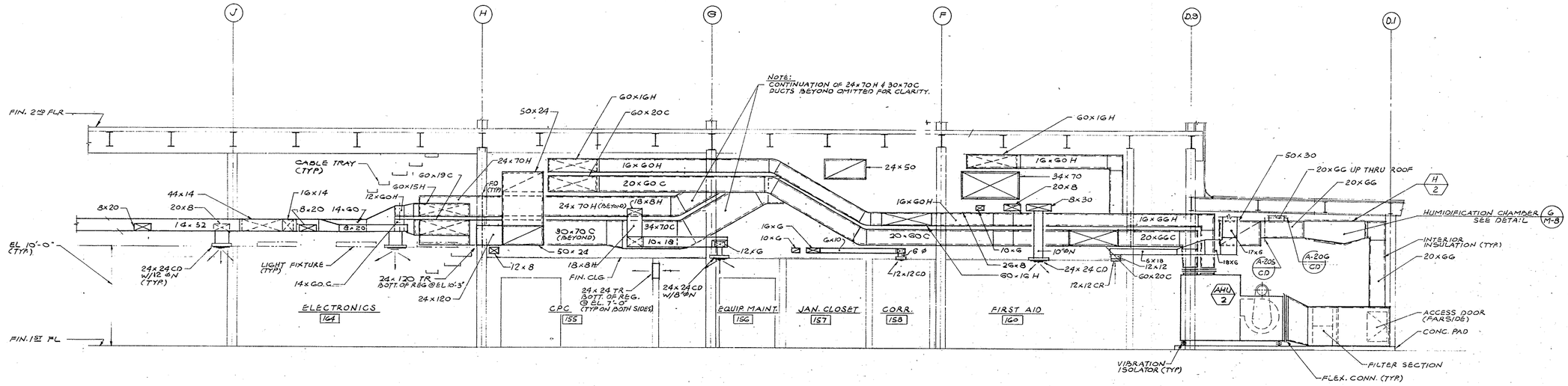

SECTION A M-12 REF M-6 M-10
1/4" = 1'-0"

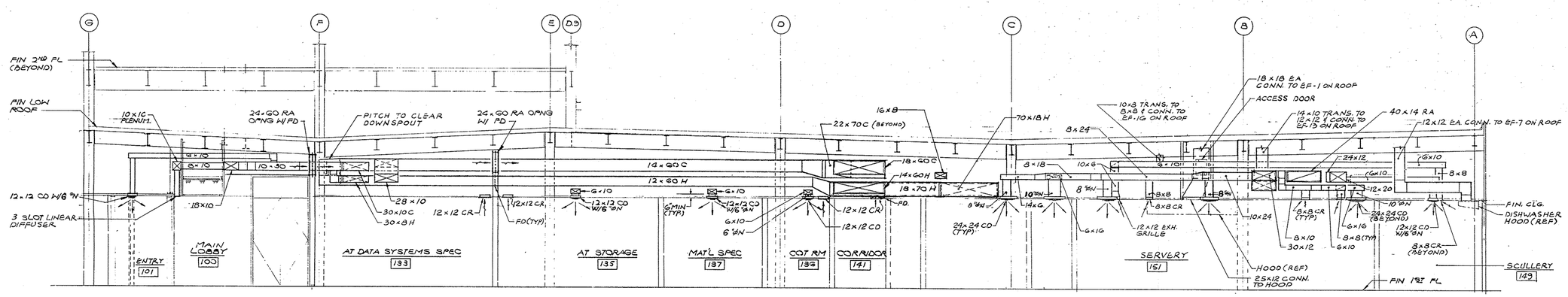

SECTION B M-12 REF M-6
1/4" = 1'-0"

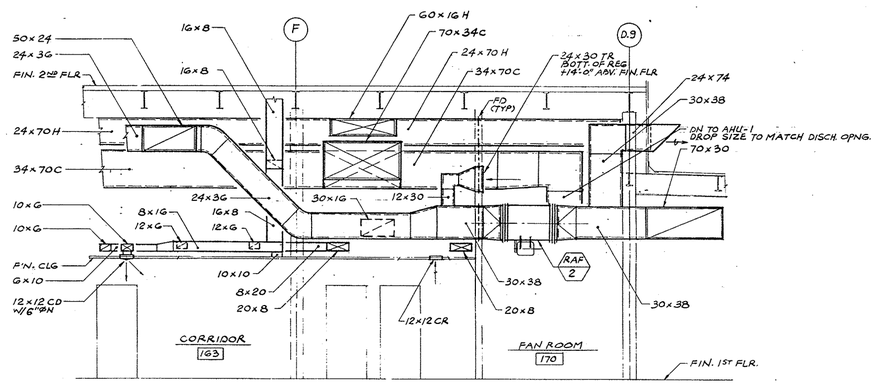

SECTION C M-12 REF M-10
1/4" = 1'-0"

REV. LTR	DATE	DESCRIPTION	CHECKED	APPROVED
1	12-6-79	AS BUILT (5-1-78)		

DEPARTMENT OF TRANSPORTATION
FEDERAL AVIATION ADMINISTRATION
EASTERN REGION — NEW YORK, N.Y.

TOWN OF HEMPSTEAD
NEW YORK TRACON FACILITY

SECTIONS

REGISTERED PROFESSIONAL ENGINEER — WARREN J. MYERS — No. 11219 — 1/22/76 — MECHANICAL — STATE OF CALIFORNIA

KDG - PARSONS
ARCHITECTS-ENGINEERS
PASADENA, CALIFORNIA

SUBMITTED BY: J. N. Shimura DATE 2/23/76

1/4" SCALE 0 4 8 12 FEET

REVIEWED BY
SUBMITTED BY: R Halpern
APPROVED BY: J. Wenstrom
DESIGNED BY: A. LEEN
DRAWN BY: R. SCHIAVO
CHECKED BY: W. MYERS
ISSUED BY: ENGINEERING BRANCH, AIRWAY FACILITIES DIVISION
DATE: 2-23-76
DRAWING NO. AEA-E-26550-M12
REV. LTR. A

A-E JOB 5478-1/480

68