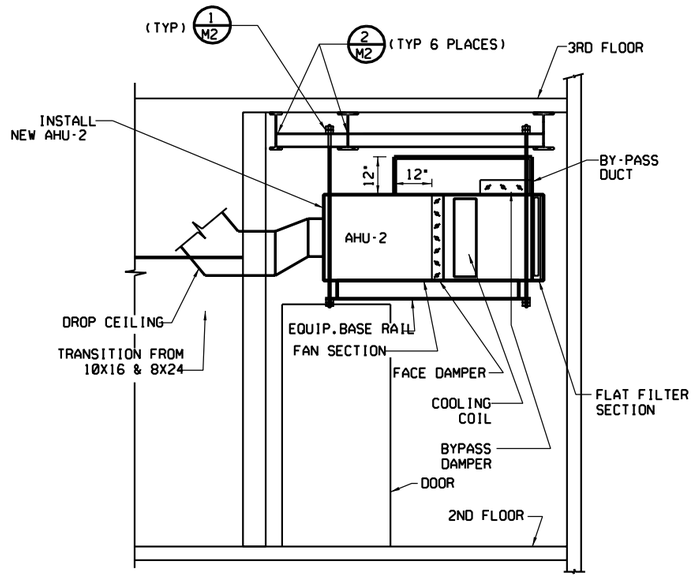

AHU-2 - ELEVATION (1)

SCALE: AS SHOWN ONLY (FIELD VERIFY)

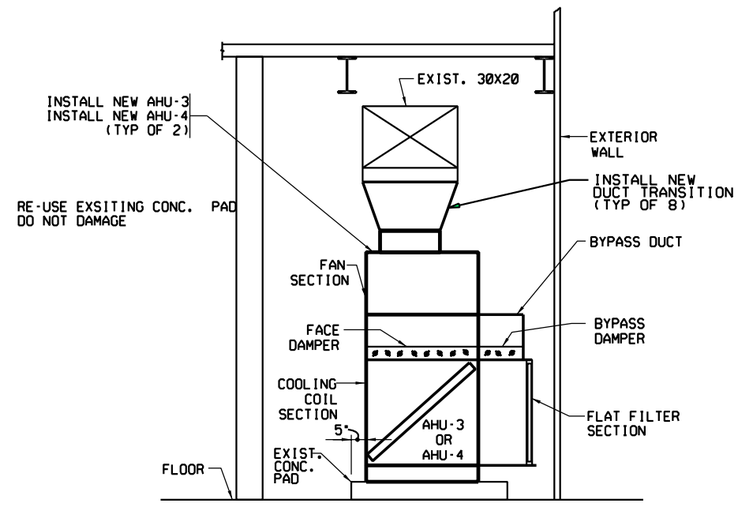

AHU-3 & AHU-4 - ELEVATION (2)

SCALE: AS SHOWN ONLY (FIELD VERIFY)

REFERENCE

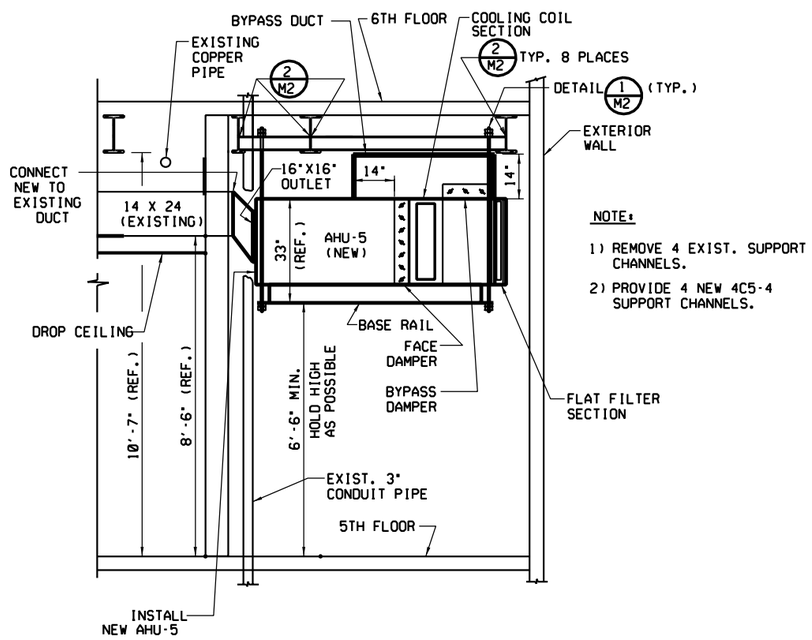

NOTE:

1) REMOVE 4 EXIST. SUPPORT CHANNELS.

2) PROVIDE 4 NEW 4C5-4 SUPPORT CHANNELS.

AHU-5 - ELEVATION (3)

SCALE: AS SHOWN ONLY (FIELD VERIFY)

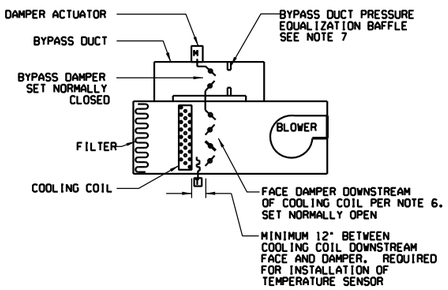

AIR HANDLING UNIT CONFIGURATION DIAGRAM

1. TYPICAL OF 6 WITH FACE AND BYPASS TEMPERATURE CONTROL.
2. SEE APPLICABLE FLOOR PLANS AND SECTIONS FOR VERTICAL OR HORIZONTAL ORIENTATION OF ALL AIR HANDLING UNIT COMPONENTS.

NOTES TO AIR HANDLING UNIT SCHEDULE:

1. ALL COOLING COILS RATED WITH CHILLED WATER OF 44°F ENTERING TEMP./54°F & 54°F LEAVING TEMP. SEE DRAWING -M015 FOR FLOW RATE.
2. ALL FANS AND MOTORS INTERNALLY VIBRATION ISOLATED.
3. ALL CONCRETE PAD MOUNTED UNITS SECURED TO CONCRETE PAD USING 4"X3"X3/16". THREE INCHES LONG GALV. STEEL ANGLES AT 6 LOCATIONS. SECURE ANGLES TO PAD AND SIDES OF UNIT.

REV	APPROVED DATE	DESCRIPTION	JCN	REDLINE DATE	APVD

DEPARTMENT OF TRANSPORTATION
FEDERAL AVIATION ADMINISTRATION
ATO - TECHNICAL OPERATIONS — WESTERN SERVICE AREA

ATCT

HILO INTERNATIONAL AIRPORT
ATCT MODERNIZATION - MECH. RENOVATION
NEW AHU-2, AHU-3, AHU-4 & AHU-5 ELEV

HILO — HAWAII — HI

REVIEWED BY	SUBMITTED BY: EDWARD CHAU (DO NOT SIGN)	APPROVED BY: CLIFFORD RUSTAD (DO NOT SIGN)	
	PROJECT ENGINEER	MGR: ENGINEERING - LA	
DESIGNED EC	ISSUED BY: ENGINEERING SERVICES TERMINAL	DATE 01/29/2010	JCN 415344
DRAWN CGV		DRAWING NO ITO-D-ATCT-M023	REV
CHECKED EC			

ISSUED FOR:

EDM:ITO-D-ATCT-M023.DGN

DRAWING PRODUCED ON WSA MICROSTATION SYSTEM

ITO-D-ATCT-M023.DGN 4/16/2010 9:19:53 AM ED CHAU