REVISIONS				
ZONE	REV	DESCRIPTION	DATE	APPROVED
	-	ORIGINAL DRAWING	05/13/2008	

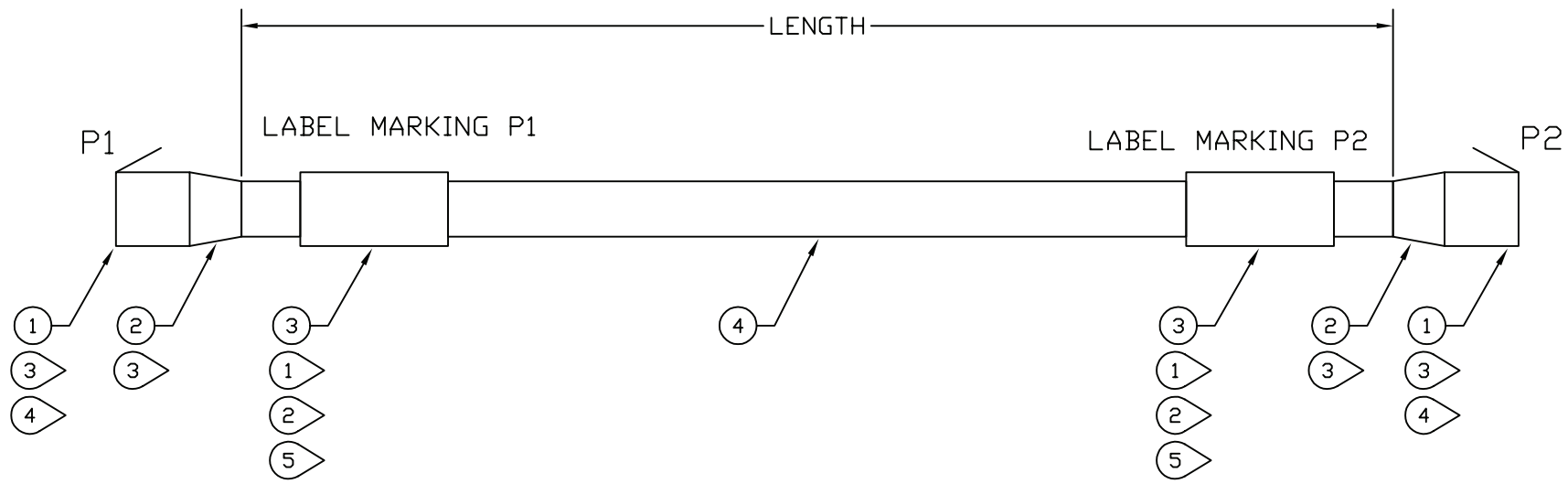

NOTES:

1. MARK IN 0.12 INCH HIGH CHARACTERS
2. SHRINK TUBING PER MANUFACTURER INSTRUCTIONS
3. ASSEMBLE PER MANUFACTURER INSTRUCTIONS
4. WIRES TO BE ARRANGED FOR INSTERTION INTO CONNECTOR PER TIA/EIA 568A STANDARD
5. CABLE LABELS TO BE WITHIN 1 INCH OF APPROPRIATE CONNECTOR END

TABLE I

PART NO.	LENGTH (IN)	NO. CONDUCTORS	LABEL MARKING P1	LABEL MARKING P2
W186	9	8	W186/A1A1-J1	W186/J4

QTY.	PART NO.	DESCRIPTION	FIND NO.
SEE TABLE I	CAT6-BULK-STP-SOL-GRAY	VPI - CAT6, SOLID CONDUCTORS, TWISTED PAIR, SHIELDED, GRAY	4
2	PSPT-375-175YL	BRADY - PERMASLEEVE WIRE MARKER SLEEVE, HEATSHRINK	3
2	FMT718	BLACKBOX - RJ45 PROTECTIVE BOOT, BLACK	2
2	6-PLG-SOLID-SH	VPI - CAT6 SHIELDED SOLID RJ45 PLUG	1

NOTES:
DIMENSIONS - INCHES

FEDERAL AVIATION ADMINISTRATION
6500 S. MACARTHUR BLVD - BLDG 227
OKLAHOMA CITY, OK 73169

POWER DISTRIBUTION UNIT
INDUCTOSYN
CAT6 TO CAT6

DRAWN BY: CFORD 5/21/2008
CHECKED BY:

SIZE D | FSCM NO. | DWG NO. LRR-000067-0005 | REV A

SCALE NONE | SHEET 1 OF 1

C:\Documents and Settings\chris ctr ford\Desktop\pdu latest\dwg\LRR-000067-0005 - EthernettoEthernet.dwg
PLOT DATE: 02/14/2009

REVISIONS				
ZONE	REV	DESCRIPTION	DATE	APPROVED
	-	ORIGINAL DRAWING	05/26/2008	

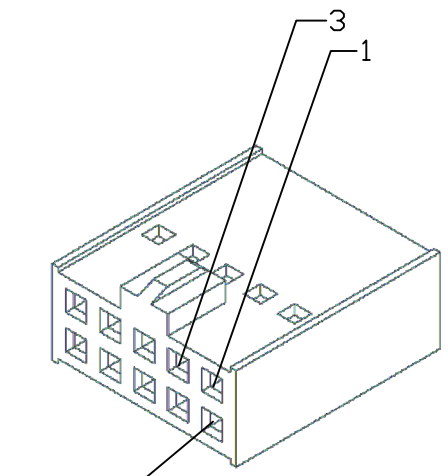

CONNECTOR P1 END VIEW (USING 8 PIN VERSION)

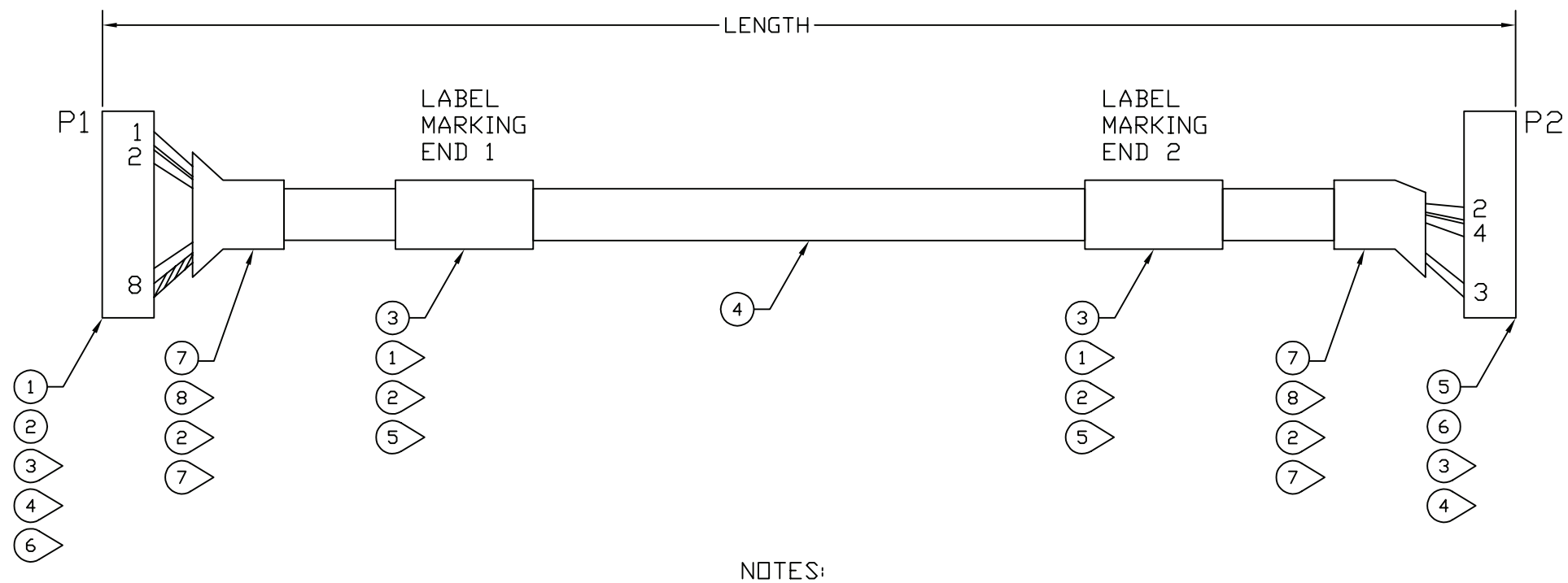

CONNECTOR P2 END VIEW

NOTES:

1. MARK IN 0.12 INCH HIGH CHARACTERS
2. SHRINK TUBING PER MANUFACTURER INSTRUCTIONS
3. CRIMP TERMINALS PER MANUFACTURER INSTRUCTIONS
4. ASSEMBLE PER MANUFACTURER INSTRUCTIONS
5. CABLE LABELS TO BE WITHIN 1 INCH OF APPROPRIATE CONNECTOR END
6. CRIMP THE BRAIDED CABLE SHIELD IN WITH THE BLACK WIRE
7. TRIM BACK UNUSED SHIELD AND INSULATION
8. CUT 0.75 INCHES OF HEATSHRINK AND PUSH UP NEXT TO THE P1 AND P2 CONNECTORS BEFORE SHRINKING

COLOR CODE TABLE II

CONNECTOR P1	CONNECTOR P2	COLOR CODE
PIN 1	PIN 2	RED
PIN 2	PIN 4	GREEN
PIN 8	PIN 3	BLACK

TABLE I

PART NO.	LENGTH (IN)	NO. CONDUCTORS	COLOR CODE TABLE	CONNECTOR P1	CONNECTOR P2	LABEL MARKING P1	LABEL MARKING P2
W187	10	7	II	90142-0008	DF11-10DS-2C	W187/A1-J5	W187/PS1-J2
W188	10	7	II	90142-0008	DF11-10DS-2C	W188/A1-J6	W188/PS2-J2

QTY.	PART NO.	DESCRIPTION	FIND NO.
SEE TABLE I	9932	BELDEN - CABLE, MULTI-CONDUCTOR, 7 CONDUCTOR, 24AWG, QUAD SHIELD	4
3'	FP-301VW1/4"BL48" BX	3M - HEATSHRINK TUBING, BLACK, 1/4"	7
2	PSPT-375-175YL	BRADY - PERMASLEEVE WIRE MARKER SLEEVE, HEATSHRINK	3
6	DF11-22SC	HIROSE - CRIMP TERMINAL, 22-24AWG	6
2	DF11-10DS-2C	HIROSE - HOUSING, 10 CONDUCTOR CONNECTOR	5
6	90119-2109	MOLEX - CRIMP TERMINAL, 22-24AWG	2
2	90142-0008	MOLEX - HOUSING, 8 CONDUCTOR CONNECTOR, 0.1 INCH SPACING	1

NOTES:
DIMENSIONS - INCHES

FEDERAL AVIATION ADMINISTRATION
6500 S. MACARTHUR BLVD - BLDG 227
OKLAHOMA CITY, OK 73169

POWER DISTRIBUTION UNIT
I2C TO I2C

DRAWN BY:	SIZE	FSCM NO.	DWG NO.	REV
CFORD 05/26/2008	D		LRR-000067-0006	A
CHECKED BY:	SCALE NONE			SHEET 1 OF 1

C:\Documents and Settings\chris ctr ford\Desktop\PDU\dwg\LRR-000067-0006 - I2CTo12C.dwg
PLOT DATE: 03/31/2009

REVISIONS				
ZONE	REV	DESCRIPTION	DATE	APPROVED
	-	ORIGINAL DRAWING	05/08/2008	

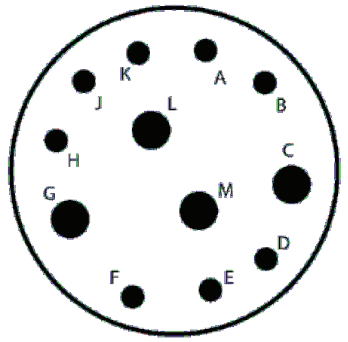

CONNECTOR P2 (J3)
PIN END VIEW
SHOWN. OPPOSITE
FOR SOCKETS

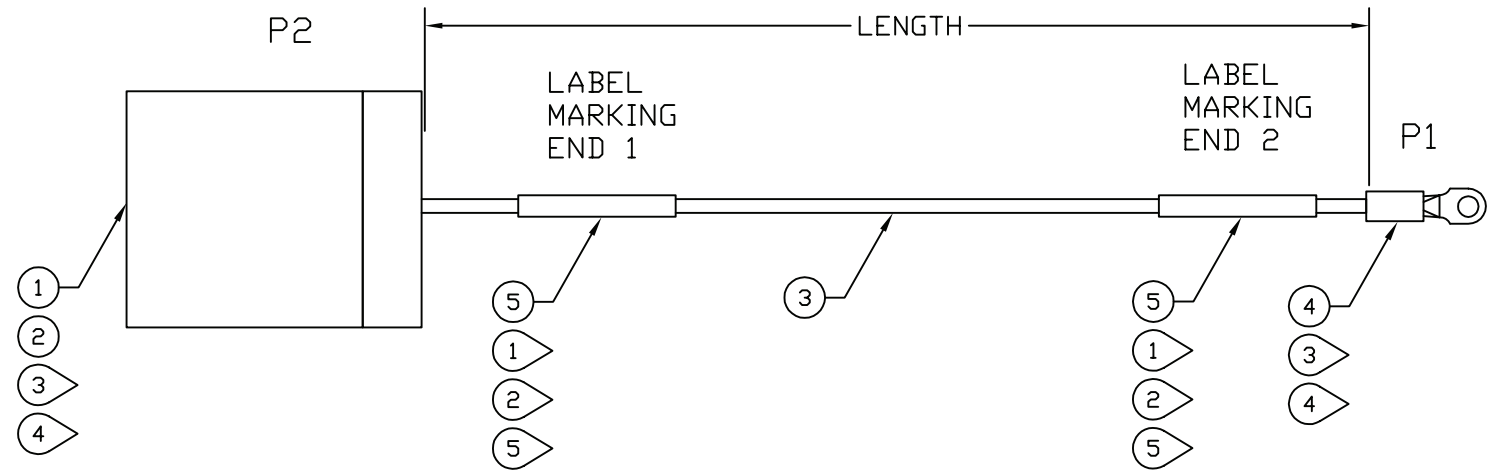

LABEL ORIENTATION:

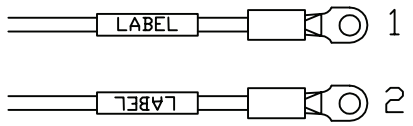

TABLE 1

PART NO.	LENGTH (IN)	WIRE	TERMINAL P1	LABEL MARKING P1	LABEL ORIENTATION	TERMINAL P2	LABEL MARKING P2	LABEL ORIENTATION
W53	26.5	5856-1	RA18-6	W53/A2TB03-8	1	M39029/56-351	W53/J3-H	2
W54	26	5856-1	RA18-6	W54/A2TB03-9	1	M39029/56-351	W54/J3-A	2
W92	29	5856-1	RA18-6	W92/A2TB07-7	1	M39029/56-351	W92/J3-J	2
W93	28.5	5856-1	RA18-6	W93/A2TB07-8	1	M39029/56-351	W93/J3-B	2
W122	27.5	5856-1	RA18-6	W122/A2TB10-7	2	M39029/56-351	W122/J3-K	2
W123	27.5	5856-1	RA18-6	W123/A2TB10-8	2	M39029/56-351	W123/J3-D	2

NOTES:

1. MARK IN 0.10 INCH HIGH CHARACTERS
2. SHRINK TUBING PER MANUFACTURER INSTRUCTIONS
3. CRIMP CONTACTS AND TERMINALS PER MANUFACTURER INSTRUCTIONS
4. ASSEMBLE PER MANUFACTURER INSTRUCTIONS
5. CABLE LABELS TO BE WITHIN 1 INCH OF APPROPRIATE CONNECTOR END

QTY.	PART NO.	DESCRIPTION	FIND NO.
12	PSPT-125-175YL	BRADY - PERMASLEEVE WIRE MARKER SLEEVE, HEATSHRINK	5
6	RA18-6	THOMAS & BETTS - TERMINAL, RING, INSULATED, NYLON, 16AWG - 22AWG, RED, #6 STUD	4
SEE TABLE I	5856-1	ALPHAWIRE - HOOK-UP WIRE, MIL-W-16878E, 20AWG, STRANDED, TFE JACKET, WHITE	3
6	M39029/56-351	CONTACT, ELECTRICAL CONNECTOR, SOCKET, CRIMP REMOVEABLE, 20AWG WIRE	2
1	D38999/20FD97SN	CONNECTOR, ELECTRICAL, CIRCULAR, ELECTROLESS NICKEL FINISH, FEMALE BOX MOUNT RECEPTACLE	1

NOTES:
DIMENSIONS - INCHES

FEDERAL AVIATION ADMINISTRATION
6500 S. MACARTHUR BLVD - BLDG 227
OKLAHOMA CITY, OK 73169

LRR ENCODER REPLACEMENT
Power Distribution Unit
Cannon Socket to Ring Terminal (J3)

DRAWN BY:	SIZE	FSCM NO.	DWG NO.	REV
CFORD 05/27/2008	D		LRR-000067-0007	A
CHECKED BY:	SCALE NONE		SHEET 1 OF 1	

C:\Documents and Settings\chris ctr ford\Desktop\pdu latest\dwg\LRR-000067-0007 - RingToCannonConnector.J3.dwg
PLOT DATE: 02/14/2009

REVISIONS				
ZONE	REV	DESCRIPTION	DATE	APPROVED
	-	ORIGINAL DRAWING	05/05/2008	

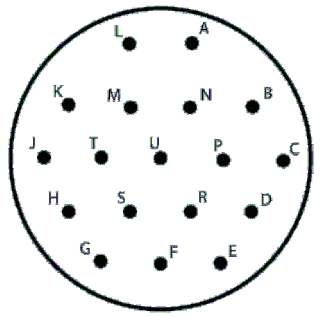

CONNECTOR P2 (J7)
PIN END VIEW
SHOWN, OPPOSITE FOR
SOCKETS

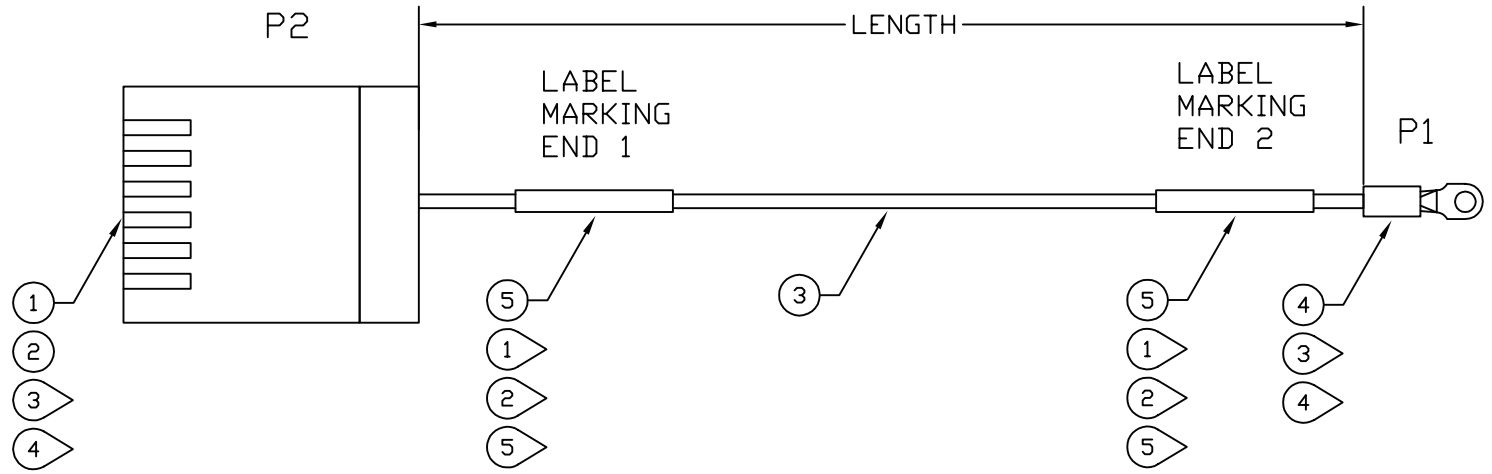

LABEL ORIENTATION:

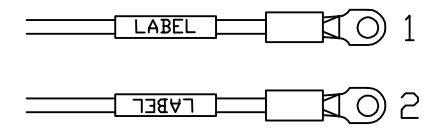

TABLE 1

PART NO.	LENGTH (IN)	WIRE	TERMINAL P1	LABEL MARKING P1	LABEL ORIENTATION	TERMINAL P2	LABEL MARKING P2	LABEL ORIENTATION
W41	29.5	5856-1	RA18-6	W41/A2TB02-6	2	M39029/56-351	W41/J7-A	1
W42	29	5856-1	RA18-6	W42/A2TB02-7	2	M39029/56-351	W42/J7-B	1
W79	27.5	5856-1	RA18-6	W79/A2TB06-4	2	M39029/56-351	W79/J7-F	1
W102	26.5	5856-1	RA18-6	W102/A2TB08-7	1	M39029/56-351	W102/J7-C	1
W104	26	5856-1	RA18-6	W104/A2TB08-9	1	M39029/56-351	W104/J7-D	1
W105	25	5856-1	RA18-6	W105/A2TB08-10	1	M39029/56-351	W105/J7-E	1
W119	24.5	5856-1	RA18-6	W119/A2TB10-4	2	M39029/56-351	W119/J7-K	1
W140	24.5	5856-1	RA18-6	W140/A2TB12-5	1	M39029/56-351	W140/J7-L	1
W138	24.5	5856-1	RA18-6	W138/A2TB12-3	1	M39029/56-351	W138/J7-H	1

NOTES:

1. MARK IN 0.10 INCH HIGH CHARACTERS
2. SHRINK TUBING PER MANUFACTURER INSTRUCTIONS
3. CRIMP CONTACTS AND TERMINALS PER MANUFACTURER INSTRUCTIONS
4. ASSEMBLE PER MANUFACTURER INSTRUCTIONS
5. CABLE LABELS TO BE WITHIN 1 INCH OF APPROPRIATE CONNECTOR END

QTY.	PART NO.	DESCRIPTION	FIND NO.
18	PSPT-125-175YL	BRADY - PERMASLEEVE WIRE MARKER SLEEVE, HEATSHRINK	5
9	RA18-6	THOMAS & BETTS - TERMINAL, RING, INSULATED, NYLON, 16AWG - 22AWG, RED, #6 STUD	4
SEE TABLE I	5856-1	ALPHAWIRE - HOOK-UP WIRE, MIL-W-16878E, 20AWG, STRANDED, TFE JACKET, WHITE	3
9	M39029/56-351	CONTACT, ELECTRICAL CONNECTOR, PIN, CRIMP REMOVEABLE, 20AWG WIRE	2
1	D38999/20FD18SN	CONNECTOR, ELECTRICAL, CIRCULAR, SHELL SIZE 23, INSERT ARRANGEMENT 53, ELECTROLESS NICKEL FINISH, MALE BOX MOUNT RECEPTACLE	1

NOTES:
DIMENSIONS - INCHES

FEDERAL AVIATION ADMINISTRATION
6500 S. MACARTHUR BLVD - BLDG 227
OKLAHOMA CITY, OK 73169

LRR ENCODER REPLACEMENT

Power Distribution Unit
Cannon Socket to Ring Terminal (J7)

DRAWN BY:	SIZE	FSCM NO.	DWG NO.	REV
CFORD 05/22/2008	D		LRR-000067-0008	A
CHECKED BY:	SCALE NONE		SHEET 1 OF 1	

C:\Documents and Settings\chris ctr ford\Desktop\pdu latest\dwg\LRR-000067-0008 - RingToCannonConnector-J7.dwg
PLOT DATE: 02/14/2009

REVISIONS				
ZONE	REV	DESCRIPTION	DATE	APPROVED
	-	ORIGINAL DRAWING	05/08/2008	

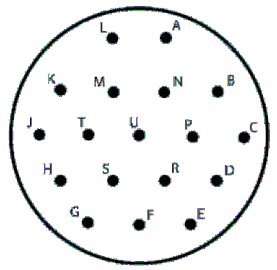

CONNECTOR P2
(J8) PIN END
VIEW SHOWN.

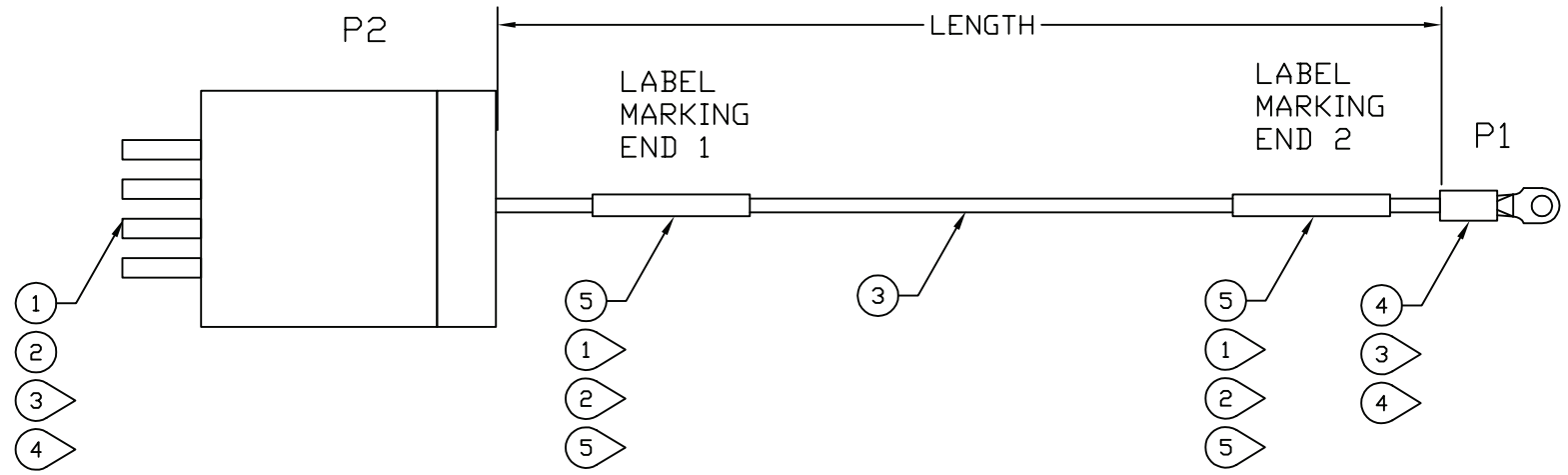

LABEL ORIENTATION:

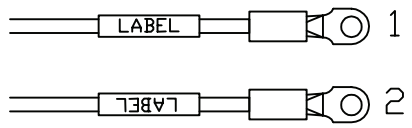

TABLE 1

PART NO.	LENGTH (IN)	WIRE	TERMINAL P1	LABEL MARKING P1	LABEL ORIENTATION	TERMINAL P2	LABEL MARKING P2	LABEL ORIENTATION
W80	25.5	5856-1	RA18-6	W80/A2TB06-5	2	M39029/58-363	W80/J8-F	1
W100	25.5	5856-1	RA18-6	W100/A2TB08-5	1	M39029/58-363	W100/J8-E	1
W120	22.5	5856-1	RA18-6	W120/A2TB10-5	2	M39029/58-363	W120/J8-K	1
W124	21.5	5856-1	RA18-6	W124/A2TB10-9	2	M39029/58-363	W124/J8-C	1
W125	21	5856-1	RA18-6	W125/A2TB10-10	2	M39029/58-363	W125/J8-D	1
W139	23	5856-1	RA18-6	W139/A2TB12-4	1	M39029/58-363	W139/J8-H	1
W141	22.5	5856-1	RA18-6	W141/A2TB12-6	1	M39029/58-363	W141/J8-L	1
W43	27.5	5856-1	RA18-6	W43/A2TB02-8	2	M39029/58-363	W43/J8-A	1
W44	27.5	5856-1	RA18-6	W44/A2TB02-9	2	M39029/58-363	W44/J8-B	1

NOTES:

1. MARK IN 0.10 INCH HIGH CHARACTERS
2. SHRINK TUBING PER MANUFACTURER INSTRUCTIONS
3. CRIMP CONTACTS AND TERMINALS PER MANUFACTURER INSTRUCTIONS
4. ASSEMBLE PER MANUFACTURER INSTRUCTIONS
5. CABLE LABELS TO BE WITHIN 1 INCH OF APPROPRIATE CONNECTOR END

QTY.	PART NO.	DESCRIPTION	FIND NO.
18	PSPT-125-175YL	BRADY - PERMASLEEVE WIRE MARKER SLEEVE, HEATSHRINK	5
9	RA18-6	THOMAS & BETTS - TERMINAL, RING, INSULATED, NYLON, 16AWG - 22AWG, RED, #6 STUD	4
SEE TABLE I	5856-1	ALPHAWIRE - HOOK-UP WIRE, MIL-W-16878E, 20AWG, STRANDED, TFE JACKET, WHITE	3
9	M39029/58-363	CONTACT, ELECTRICAL CONNECTOR, PIN, CRIMP REMOVEABLE, 20AWG WIRE	2
1	D38999/20FD18PN	CONNECTOR, ELECTRICAL, CIRCULAR, ELECTROLESS NICKEL FINISH, MALE BOX MOUNT RECEPTACLE	1

NOTES:
DIMENSIONS - INCHES

FEDERAL AVIATION ADMINISTRATION
6500 S. MACARTHUR BLVD - BLDG 227
OKLAHOMA CITY, OK 73169

LRR ENCODER REPLACEMENT
Power Distribution Unit
Cannon Pin to Ring Terminal (J8)

DRAWN BY:		SIZE	FSCM NO.	DWG NO.	REV
CFORD	05/05/2008	D		LRR-000067-0009	A
CHECKED BY:		SCALE NONE		SHEET 1 OF 1	

C:\Documents and Settings\chris ctr ford\Desktop\pdu latest\dwg\LRR-000067-0009 - RingToCannonConnector J8.dwg
PLOT DATE: 02/14/2009

REVISIONS				
ZONE	REV	DESCRIPTION	DATE	APPROVED
	-	ORIGINAL DRAWING	05/08/2008	

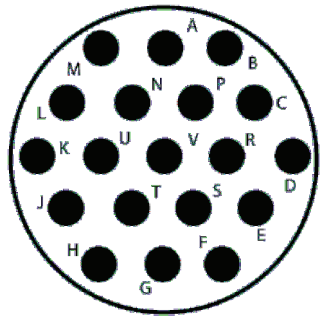

CONNECTOR P2 (J9)
PIN END VIEW
SHOWN. OPPOSITE
FOR SOCKETS.

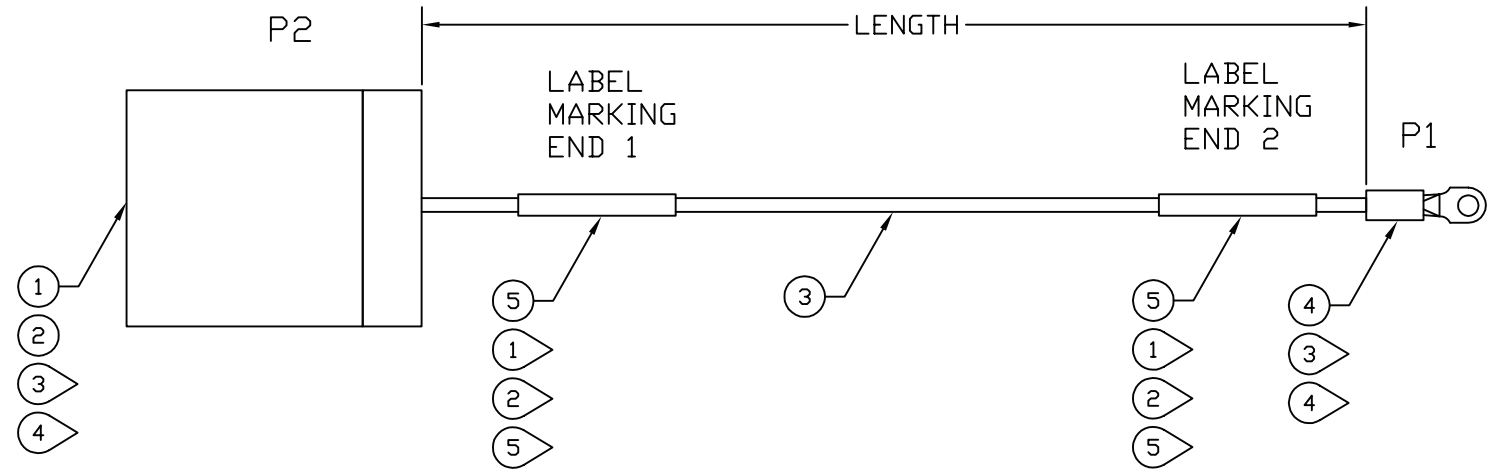

LABEL ORIENTATION:

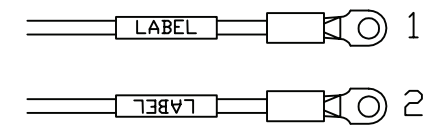

TABLE 1

PART NO.	LENGTH (IN)	WIRE	TERMINAL P1	LABEL MARKING P1	LABEL ORIENTATION	TERMINAL P2	LABEL MARKING P2	LABEL ORIENTATION
W81	23.5	5856-1	RA18-6	W81/A2TB13-6	2	M39029/56-351	W81/J9-A	1
W82	23	5856-1	RA18-6	W82/A2TB13-7	2	M39029/56-351	W82/J9-B	1
W83	22.5	5856-1	RA18-6	W83/A2TB13-8	2	M39029/56-351	W83/J9-C	1
W84	22	5856-1	RA18-6	W84/A2TB13-9	2	M39029/56-351	W84/J9-D	1
W62	27	5856-1	RA18-6	W62/A2TB04-7	1	M39029/56-351	W62/J9-G	1
W63	26.5	5856-1	RA18-6	W63/A2TB04-8	1	M39029/56-351	W63/J9-H	1
W64	26	5856-1	RA18-6	W64/A2TB04-9	1	M39029/56-351	W64/J9-J	1
W65	25.5	5856-1	RA18-6	W65/A2TB04-10	1	M39029/56-351	W65/J9-K	1

NOTES:

1. MARK IN 0.10 INCH HIGH CHARACTERS
2. SHRINK TUBING PER MANUFACTURER INSTRUCTIONS
3. CRIMP CONTACTS AND TERMINALS PER MANUFACTURER INSTRUCTIONS
4. ASSEMBLE PER MANUFACTURER INSTRUCTIONS
5. CABLE LABELS TO BE WITHIN 1 INCH OF APPROPRIATE CONNECTOR END

QTY.	PART NO.	DESCRIPTION	FIND NO.
16	PSPT-125-175YL	BRADY - PERMASLEEVE WIRE MARKER SLEEVE, HEATSHRINK	5
8	RA18-6	THOMAS & BETTS - TERMINAL, RING, INSULATED, NYLON, 16AWG - 22AWG, RED, #6 STUD	4
SEE TABLE I	5856-1	ALPHAWIRE - HOOK-UP WIRE, MIL-W-16878E, 20AWG, STRANDED, TFE JACKET, WHITE	3
8	M39029/56-351	CONTACT, ELECTRICAL CONNECTOR, SOCKET, CRIMP REMOVEABLE, 20AWG WIRE	2
1	D38999/20FD19SN	CONNECTOR, ELECTRICAL, CIRCULAR, ELECTROLESS NICKEL FINISH, FEMALE BOX MOUNT RECEPTACLE	1

NOTES:
DIMENSIONS - INCHES

FEDERAL AVIATION ADMINISTRATION
6500 S. MACARTHUR BLVD - BLDG 227
OKLAHOMA CITY, OK 73169

LRR ENCODER REPLACEMENT
Power Distribution Unit
Cannon Socket to Ring Terminal (J9)

DRAWN BY: CFORD 05/22/2008
CHECKED BY:

SIZE D | FSCM NO. | DWG NO. LRR-000067-0010 | REV A
SCALE NONE | SHEET 1 OF 1

C:\Documents and Settings\chris ctr ford\Desktop\pdu latest\dwg\LRR-000067-0010 - RingToCannonConnector_J9.dwg
PLOT DATE: 02/14/2009

REVISIONS				
ZONE	REV	DESCRIPTION	DATE	APPROVED
	-	ORIGINAL DRAWING	05/08/2008	

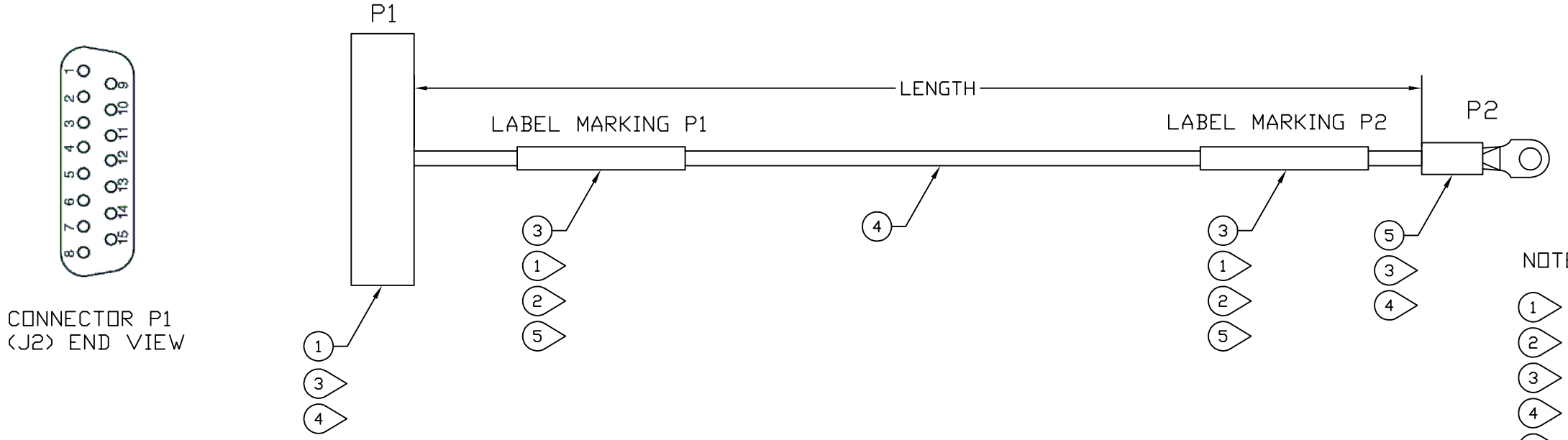

LABEL ORIENTATION:

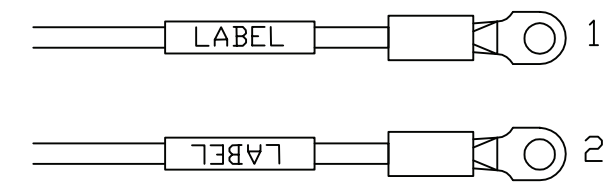

NOTES:

1. MARK IN 0.10 INCH HIGH CHARACTERS
2. SHRINK TUBING PER MANUFACTURER INSTRUCTIONS
3. CRIMP CONTACTS PER MANUFACTURER INSTRUCTIONS
4. ASSEMBLE PER MANUFACTURER INSTRUCTIONS
5. CABLE LABELS TO BE WITHIN 1 INCH OF APPROPRIATE CONNECTOR END

TABLE 1

PART NO.	LENGTH (IN)	TERMINAL P1	LABEL MARKING P1	LABEL ORIENTATION	TERMINAL P2	LABEL MARKING P2	LABEL ORIENTATION
W38	22	M39029/63-368	W38/J2-2	2	RA18-6	W38/A2TB02-3	2
W39	21.5	M39029/63-368	W39/J2-8	2	RA18-6	W39/A2TB02-4	2
W40	21	M39029/63-368	W40/J2-10	2	RA18-6	W40/A2TB02-5	2
W55	23.5	M39029/63-368	W55/J2-7	2	RA18-6	W55/A2TB03-10	1
W78	25	M39029/63-368	W78/J2-1	2	RA18-6	W78/A2TB06-3	2
W94	27	M39029/63-368	W94/J2-9	2	RA18-6	W94/A2TB07-9	1
W101	23	M39029/63-368	W101/J2-4	2	RA18-6	W101/A2TB08-6	1
W103	22.5	M39029/63-368	W103/J2-6	2	RA18-6	W103/A2TB08-8	1
W121	26.5	M39029/63-368	W121/J2-3	2	RA18-6	W121/A2TB10-6	2
W137	28	M39029/63-368	W137/J2-5	2	RA18-6	W137/A2TB12-2	1
W155	32	M39029/63-368	W155/J2-11	2	RA18-6	W155/A2TB13-10	2
W162	29	M39029/63-368	W162/J2-12	2	RA18-6	W162/A2TB14-7	2
W176	31	M39029/63-368	W176/J2-13	2	RA18-6	W176/A2TB16-1	1
W185	27.5	M39029/63-368	W185/J2-14	2	RA18-6	W185/A2TB16-10	1

QTY.	PART NO.	DESCRIPTION	FIND NO.
14	RA18-6	THOMAS & BETTS - TERMINAL, RING, INSULATED, NYLON, 16AWG-22AWG, RED, #6 STUD	5
SEE TABLE I	5856-1	ALPHAWIRE - HOOK-UP WIRE, MIL-W-16878E, 20AWG, STRANDED, TFE JACKET, WHITE	4
28	PSPT-125-175YL	BRADY - PERMASLEEVE WIRE MARKER SLEEVE, HEATSHRINK	3
14	M39029/63-368	CONTACT, ELECTRICAL CONNECTOR, SOCKET, CRIMP REMOVEABLE, 20AWG WIRE	2
1	M24308/2-2F	CONNECTOR, ELECTRIC, RECTANGULAR, FEMALE RECEPTACLE	1

NOTES:
DIMENSIONS - INCHES

FEDERAL AVIATION ADMINISTRATION
6500 S. MACARTHUR BLVD - BLDG 227
OKLAHOMA CITY, OK 73169

LRR ENCODER REPLACEMENT
POWER DISTRIBUTION UNIT
DB CONNECTOR TO RING

DRAWN BY:	SIZE	FSCM NO.	DWG NO.	REV
CFORD 5/22/2008	D		LRR-000067-0011	A
CHECKED BY:	SCALE NONE		SHEET 1 OF 1	

C:\Documents and Settings\chris ctr ford\Desktop\pdu latest\dwg\LRR-000067-0011 - RingToDBConnector.J2.dwg
PLOT DATE: 02/14/2009

REVISIONS				
ZONE	REV	DESCRIPTION	DATE	APPROVED
	-	ORIGINAL DRAWING	05/08/2008	

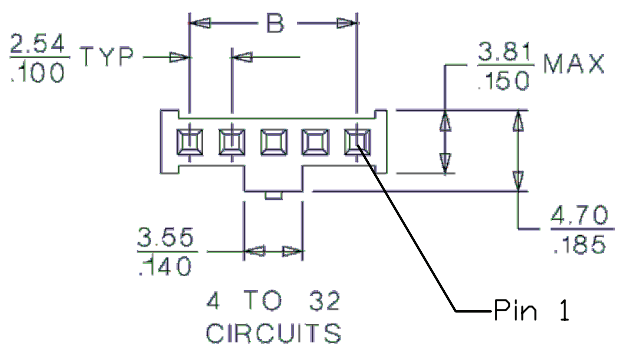

CONNECTOR P2
END VIEW

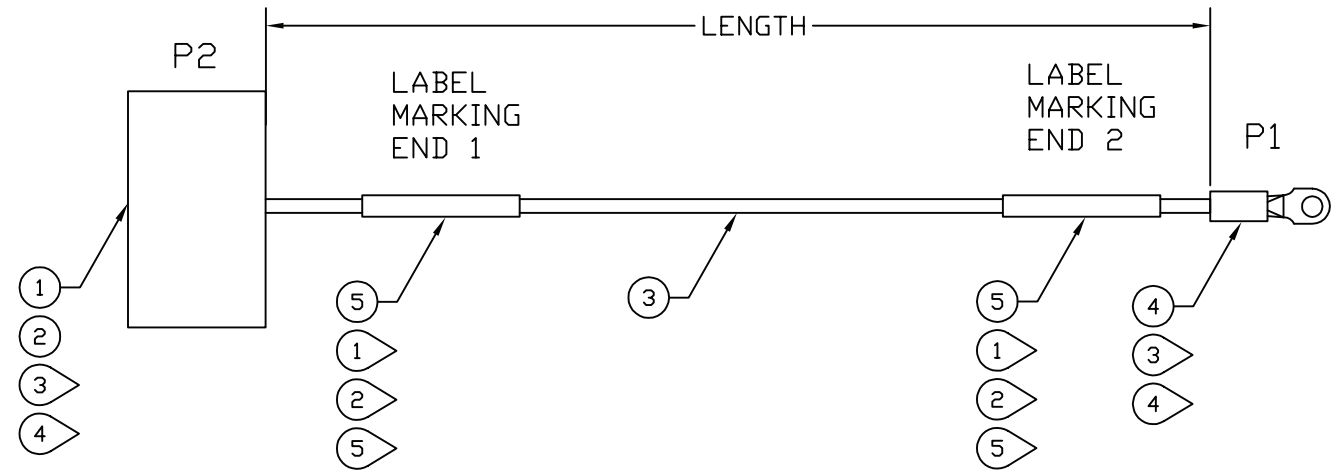

LABEL ORIENTATION:

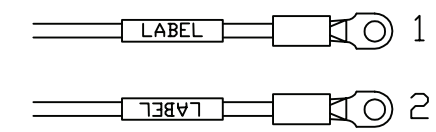

TABLE 1

PART NO.	LENGTH	WIRE	TERMINAL P1	LABEL MARKING P1	LABEL ORIENTATION	TERMINAL P2	LABEL MARKING P2	LABEL ORIENTATION
W77	29	5855-1	RA18-6	W77/A2TB06-2	2	90119-2109	W77/A1J3-1/+5	2
W145	29	5855-1	RA18-6	W145/A2TB12-10	1	90119-2109	W145/A1J3-2/GND	2

NOTES:

1. MARK IN 0.10 INCH HIGH CHARACTERS
2. SHRINK TUBING PER MANUFACTURER INSTRUCTIONS
3. CRIMP CONTACTS AND TERMINALS PER MANUFACTURER INSTRUCTIONS
4. ASSEMBLE PER MANUFACTURER INSTRUCTIONS
5. CABLE LABELS TO BE WITHIN 1 INCH OF APPROPRIATE CONNECTOR END

QTY.	PART NO.	DESCRIPTION	FIND NO.
4	PSPT-125-175YL	BRADY - PERMASLEEVE WIRE MARKER SLEEVE, HEATSHRINK	5
2	RA18-6	THOMAS & BETTS - TERMINAL, RING, INSULATED, NYLON, 16AWG - 22AWG, RED, #6 STUD	4
SEE TABLE I	5855-1	ALPHAWIRE - HOOK-UP WIRE, MIL-W-16878E, 22AWG, STRANDED, TFE JACKET, WHITE	3
2	90119-2109	CONTACT, ELECTRICAL CONNECTOR, SOCKET, CRIMP REMOVEABLE, 20AWG WIRE	2
1	90156-0144	MOLEX HOUSING, 4 POSITION, 0.100" PITCH	1

NOTES:
DIMENSIONS - INCHES

FEDERAL AVIATION ADMINISTRATION
6500 S. MACARTHUR BLVD - BLDG 227
OKLAHOMA CITY, OK 73169

LRR ENCODER REPLACEMENT

Power Distribution Unit
Ring To Housing A1J3

DRAWN BY: CFORD 05/27/2008
CHECKED BY:

SIZE D | FSCM NO. | DWG NO. LRR-000067-0012 | REV A

SCALE NONE | SHEET 1 OF 1

C:\Documents and Settings\chris ctr ford\Desktop\PDU\dwg\LRR-000067-0012 - RingToHousingA1J3.dwg
PLOT DATE: 03/30/2009

REVISIONS				
ZONE	REV	DESCRIPTION	DATE	APPROVED
	-	ORIGINAL DRAWING	05/08/2008	

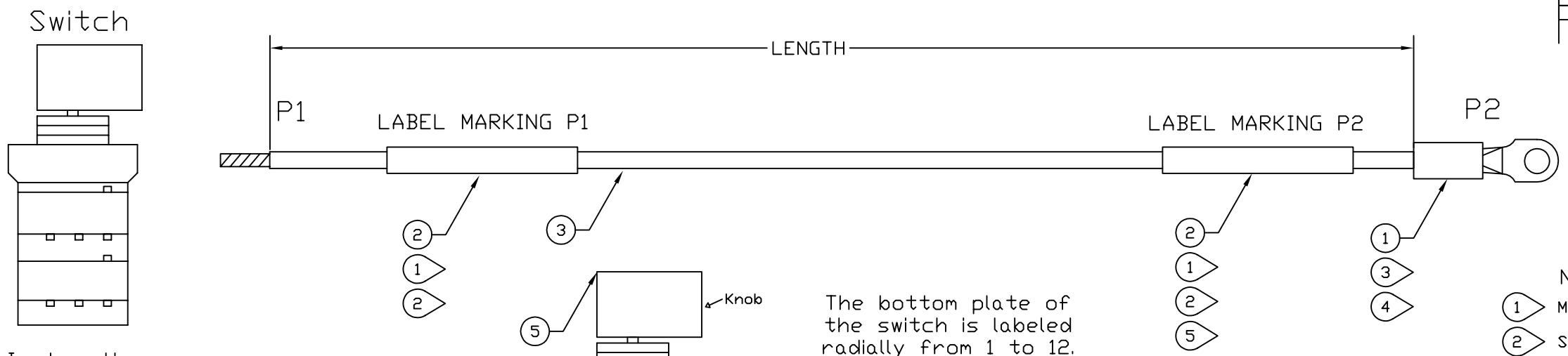

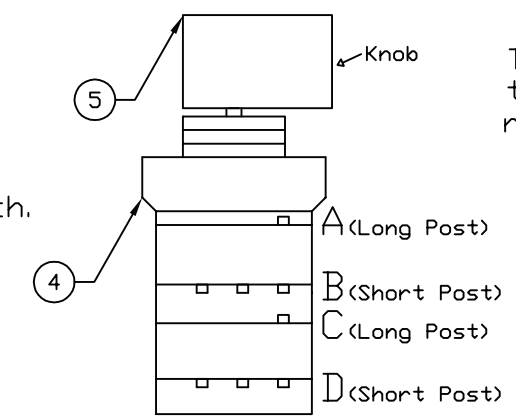

Viewed from side of switch.

The bottom plate of the switch is labeled radially from 1 to 12.

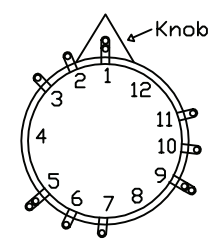

Viewed from bottom of switch.

Instructions:
1. End P1 is at the switch.
2. Strip end P1 approximately 0.25 inch.
3. Bend end P1 into an open loop.
4. Solder end P1 to the pin on the switch indicated by the chart.
5. Slide label on end P1 up to post. Apply heat to shrink label.
6. Slide label for end P2 over wire.
7. Crimp RA18-6 to end P2.
8. Slide label for end 2 up to within 1 inch of the ring terminal. Apply heat to shrink label.

NOTES:
1. MARK IN 0.10 INCH HIGH CHARACTERS
2. SHRINK TUBING PER MANUFACTURER INSTRUCTIONS
3. CRIMP TERMINALS PER MANUFACTURER INSTRUCTIONS
4. ASSEMBLE PER MANUFACTURER INSTRUCTIONS
5. CABLE LABELS TO BE WITHIN 1 INCH OF APPROPRIATE CONNECTOR END

LABEL ORIENTATION:

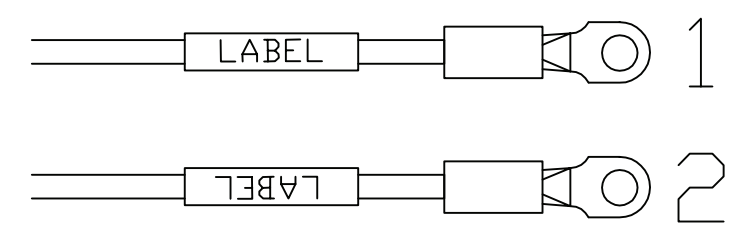

TABLE 1

PART NO.	LENGTH (IN)	TERMINAL P1	LABEL MARKING P1	LABEL ORIENTATION	TERMINAL P2	LABEL MARKING P2	LABEL ORIENTATION
W18	21	ROTARY SWITCH	W18/SW1-1A	1	RA18-6	W18/A3-3	1
W19	15	ROTARY SWITCH	W19/SW1-1C	1	RA18-6	W19/A7-3	1
W20	18.5	ROTARY SWITCH	W20/SW1-5A	1	RA18-6	W20/A6-3	1
W21	13.5	ROTARY SWITCH	W21/SW1-5C	1	RA18-6	W21/A5-3	1
W22	17	ROTARY SWITCH	W22/SW1-9A	1	RA18-6	W22/A4-3	1
W23	11	ROTARY SWITCH	W23/SW1-9C	1	RA18-6	W23/A8-3	1
W47	63.5	ROTARY SWITCH	W47/SW1-6B	1	RA18-6	W47/A2TB03-2	1
W49	63.75	ROTARY SWITCH	W49/SW1-7B	1	RA18-6	W49/A2TB03-4	1
W50	64	ROTARY SWITCH	W50/SW1-5B	1	RA18-6	W50/A2TB03-5	1
W67	60	ROTARY SWITCH	W67/SW1-2B	1	RA18-6	W67/A2TB05-2	2
W69	61	ROTARY SWITCH	W69/SW1-3B	1	RA18-6	W69/A2TB05-4	2
W70	61.5	ROTARY SWITCH	W70/SW1-1B	1	RA18-6	W70/A2TB05-5	2
W87	60.5	ROTARY SWITCH	W87/SW1-2D	1	RA18-6	W87/A2TB07-2	1
W89	61	ROTARY SWITCH	W89/SW1-3D	1	RA18-6	W89/A2TB07-4	1
W90	61.5	ROTARY SWITCH	W90/SW1-1D	1	RA18-6	W90/A2TB07-5	1
W107	57.5	ROTARY SWITCH	W107/SW1-10B	1	RA18-6	W107/A2TB09-2	2
W109	58	ROTARY SWITCH	W109/SW1-11B	1	RA18-6	W109/A2TB09-4	2
W110	58.5	ROTARY SWITCH	W110/SW1-9B	1	RA18-6	W110/A2TB09-5	2
W127	57.5	ROTARY SWITCH	W127/SW1-6D	1	RA18-6	W127/A2TB11-2	1
W129	58	ROTARY SWITCH	W129/SW1-7D	1	RA18-6	W129/A2TB11-4	1
W130	58.5	ROTARY SWITCH	W130/SW1-5D	1	RA18-6	W130/A2TB11-5	1
W147	55	ROTARY SWITCH	W147/SW1-10D	1	RA18-6	W147/A2TB13-2	2
W149	56	ROTARY SWITCH	W149/SW1-11D	1	RA18-6	W149/A2TB13-4	2
W150	56.5	ROTARY SWITCH	W150/SW1-9D	1	RA18-6	W150/A2TB13-5	2

QTY.	PART NO.	DESCRIPTION	FIND NO.
SEE TABLE 1	5855-1	ALPHAWIRE - HOOK-UP WIRE, MIL-W-16878E, 22AWG, STRANDED, TFE JACKET, WHITE	3
1	11K5028-KMNB	GRAYHILL - KNOB FOR ROTARY SWITCH - BLACK	5
1	44A30-02-3-03N	GRAYHILL - ROTARY SWITCH - 3 POS. - 6 THROW - 3 POLE	4
24	RA18-6	THOMAS & BETTS - TERMINAL, RING, INSULATED, NYLON, 16AWG - 22AWG, RED, #6 STUD	1
48	PSPT-125-175YL	BRADY - PERMASLEEVE WIRE MARKER SLEEVE, HEATSHRINK	2

NOTES:
DIMENSIONS - INCHES

FEDERAL AVIATION ADMINISTRATION
6500 S. MACARTHUR BLVD - BLDG 227
OKLAHOMA CITY, OK 73169

LRR ENCODER REPLACEMENT
POWER DISTRIBUTION UNIT
ROTARY SWITCH

DRAWN BY: CFORD 05/22/2008
CHECKED BY:
SIZE D | FSCM NO. | DWG NO. LRR-000067-0013 | REV A
SCALE NONE | SHEET 1 OF 1

C:\Documents and Settings\chris ctr ford\Desktop\pdu latest\dwg\LRR-000067-0013 - RingToSwitchSW1.dwg
PLOT DATE: 02/14/2009

REVISIONS				
ZONE	REV	DESCRIPTION	DATE	APPROVED
	-	ORIGINAL DRAWING	05/05/2008	

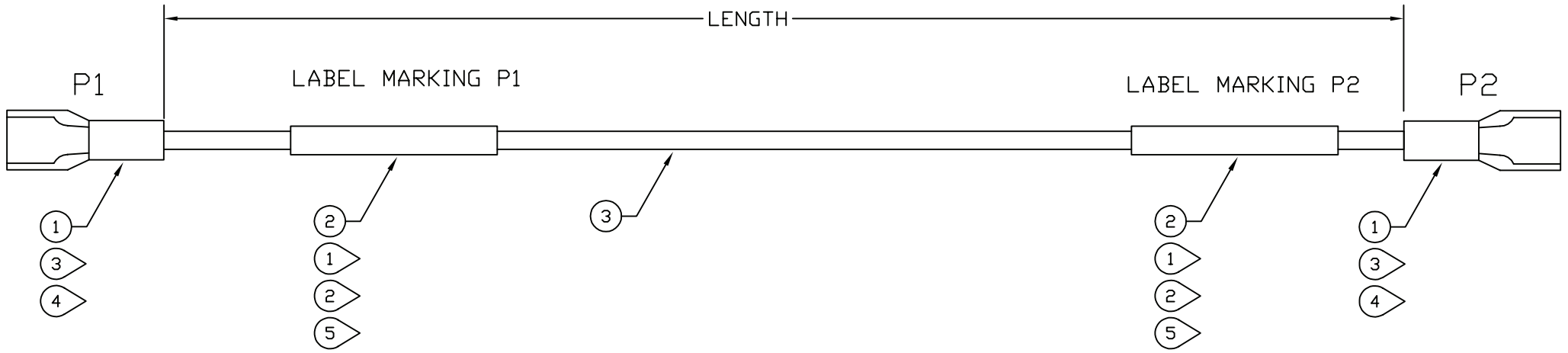

NOTES:

1. MARK IN 0.10 INCH HIGH CHARACTERS
2. SHRINK TUBING PER MANUFACTURER INSTRUCTIONS
3. CRIMP TERMINALS PER MANUFACTURER INSTRUCTIONS
4. ASSEMBLE PER MANUFACTURER INSTRUCTIONS
5. CABLE LABELS TO BE WITHIN 1 INCH OF APPROPRIATE CONNECTOR END

TABLE 1

PART NO.	LENGTH (IN)	WIRE	TERMINAL P1	LABEL MARKING P1	LABEL ORIENTATION	TERMINAL P2	LABEL MARKING P2	LABEL ORIENTATION
W24	5	5859-2	14RB-2577	W24/SW2-2	2	14RB-2577	W24/FL1-H	1
W25	4.5	5859-2	14RB-2577	W25/SW3-2	2	14RB-2577	W25/FL2-H	1

LABEL ORIENTATION:

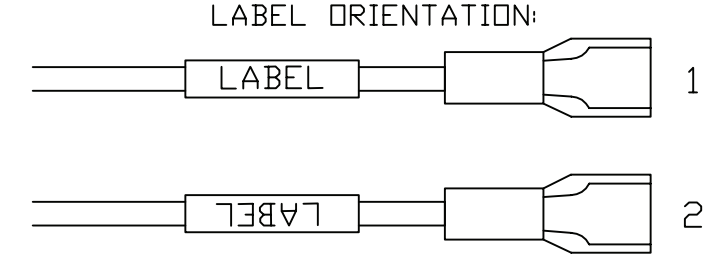

QTY.	PART NO.	DESCRIPTION	FIND NO.
SEE TABLE 1	5859-2	ALPHAWIRE - HOOK-UP WIRE, MIL-W-16878E, 14AWG, STRANDED, TFE JACKET, BLACK	3
4	14RB-2577	THOMAS & BETTS - QUICK CONNECT, FEMALE, INSULATED, NYLON, 14AWG - 18AWG, BLUE	1
4	PSPT-125-175YL	BRADY - PERMASLEEVE WIRE MARKER SLEEVE, HEATSHRINK	2

NOTES:
DIMENSIONS - INCHES

FEDERAL AVIATION ADMINISTRATION
6500 S. MACARTHUR BLVD - BLDG 227
OKLAHOMA CITY, OK 73169

LRR ENCODER REPLACEMENT
POWER DISTRIBUTION UNIT
FEMALE DISCONNECT TO FEMALE DISCONNECT 14AWG

DRAWN BY: CFORD 05/22/2008
CHECKED BY:
SIZE D | FSCM NO. | DWG NO. LRR-000067-0014 | REV A
SCALE NONE | SHEET 1 OF 1

C:\Documents and Settings\chris ctr ford\Desktop\pdu latest\dwg\LRR-000067-0014 - FemaleDisconnectToFemaleDisconnect.dwg
PLOT DATE: 02/14/2009

REVISIONS				
ZONE	REV	DESCRIPTION	DATE	APPROVED
	-	ORIGINAL DRAWING	03/25/2008	

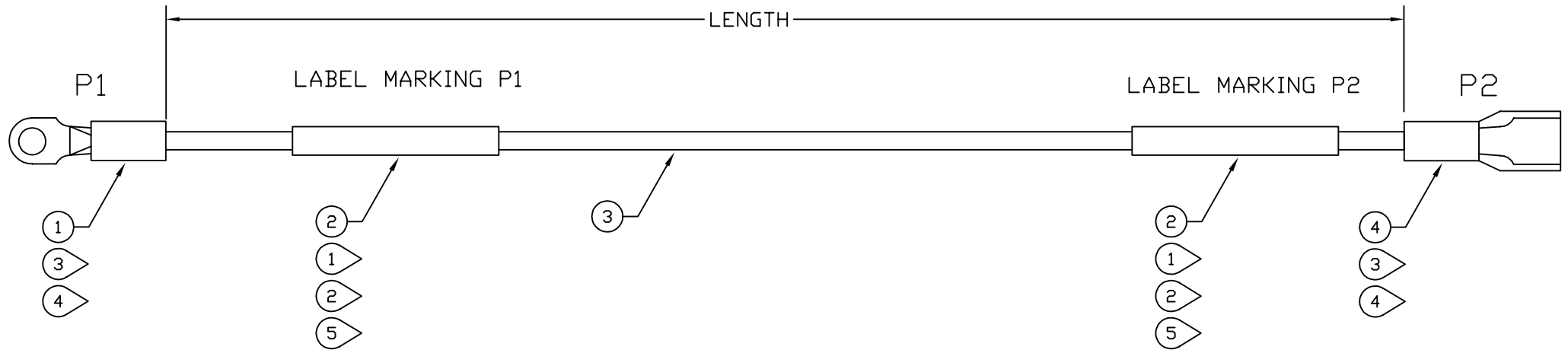

NOTES:

1. MARK IN 0.10 INCH HIGH CHARACTERS
2. SHRINK TUBING PER MANUFACTURER INSTRUCTIONS
3. CRIMP TERMINALS PER MANUFACTURER INSTRUCTIONS
4. ASSEMBLE PER MANUFACTURER INSTRUCTIONS
5. CABLE LABELS TO BE WITHIN 1 INCH OF APPROPRIATE CONNECTOR END

TABLE 1

PART NO.	LENGTH (IN)	WIRE	TERMINAL P1	LABEL MARKING P1	LABEL ORIENTATION	TERMINAL P2	LABEL MARKING P2	LABEL ORIENTATION
W1	10	5859-2	RB14-6	W1/TB1-1	2	14RB-2577	W1/SW3-1	1
W4	10	5859-1	RB14-6	W4/TB1-3	2	14RB-2577	W4/FL2-N	2
W6	9	5859-4	RB14-6	W6/TB1-5	2	14RB-2577	W6/FL2-PE	1
W9	10.5	5859-4	RB14-6	W9/TB1-7	2	14RB-2577	W9/FL1-PE	1
W12	13	5859-1	RB14-6	W12/TB1-10	2	14RB-2577	W12/FL1-N	2
W13	12.5	5859-2	RB14-6	W13/TB1-12	2	14RB-2577	W13/SW2-1	1
W156	28.5	5856-1	RA18-6	W156/A2TB14-1	2	18RA-2577	W156/MF1-(+)	2
W165	25	5856-1	RA18-6	W165/A2TB14-10	2	18RA-2577	W165/MF1-(-)	2

LABEL ORIENTATION:

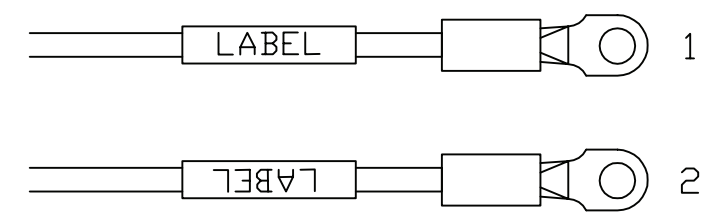

QTY.	PART NO.	DESCRIPTION	FIND NO.
SEE TABLE 1	5859-1	ALPHAWIRE - HOOK-UP WIRE, MIL-W-16878E, 14AWG, STRANDED, TFE JACKET, WHITE	3
SEE TABLE 1	5859-2	ALPHAWIRE - HOOK-UP WIRE, MIL-W-16878E, 14AWG, STRANDED, TFE JACKET, BLACK	3
SEE TABLE 1	5859-4	ALPHAWIRE - HOOK-UP WIRE, MIL-W-16878E, 14AWG, STRANDED, TFE JACKET, GREEN	3
SEE TABLE 1	5856-1	ALPHAWIRE - HOOK-UP WIRE, MIL-W-16878E, 20AWG, STRANDED, TFE JACKET, WHITE	3
2	RA18-6	THOMAS & BETTS - TERMINAL, RING, INSULATED, NYLON, 16AWG - 22AWG, RED, #6 STUD	1
6	RB14-6	THOMAS & BETTS - TERMINAL, RING, INSULATED, NYLON, 14AWG - 18AWG, BLUE, #6 STUD	1
6	14RB-2577	THOMAS & BETTS - QUICK CONNECT, FEMALE, INSULATED, NYLON, 14AWG - 18AWG, BLUE	4
2	18RA-2577	THOMAS & BETTS - QUICK CONNECT, FEMALE, INSULATED, NYLON, 16AWG - 22AWG, RED	4
16	PSPT-125-175YL	BRADY - PERMASLEEVE WIRE MARKER SLEEVE, HEATSHRINK	2

NOTES:
DIMENSIONS - INCHES

FEDERAL AVIATION ADMINISTRATION
6500 S. MACARTHUR BLVD - BLDG 227
OKLAHOMA CITY, OK 73169

LRR ENCODER REPLACEMENT

POWER DISTRIBUTION UNIT

RING TERMINAL TO RING TERMINAL 14AWG

DRAWN BY:		SIZE	FSCM NO.	DWG NO.	REV
CFORD	04/30/2008	D		LRR-000067-0015	A
CHECKED BY:		SCALE NONE		SHEET 1 OF 1	

C:\Documents and Settings\chris ctr ford\Desktop\pdu latest\dwg\LRR-000067-0015 - RingToFemaleDisconnect.dwg
PLOT DATE: 02/14/2009

REVISIONS				
ZONE	REV	DESCRIPTION	DATE	APPROVED
	-	ORIGINAL DRAWING	03/25/2008	

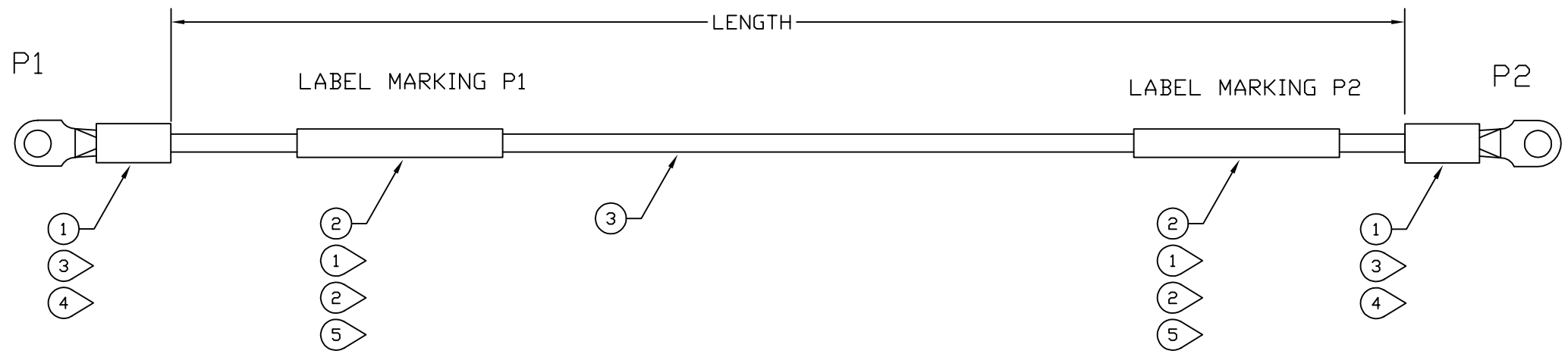

NOTES:

1. MARK IN 0.10 INCH HIGH CHARACTERS
2. SHRINK TUBING PER MANUFACTURER INSTRUCTIONS
3. CRIMP TERMINALS PER MANUFACTURER INSTRUCTIONS
4. ASSEMBLE PER MANUFACTURER INSTRUCTIONS
5. CABLE LABELS TO BE WITHIN 1 INCH OF APPROPRIATE CONNECTOR END

LABEL ORIENTATION:

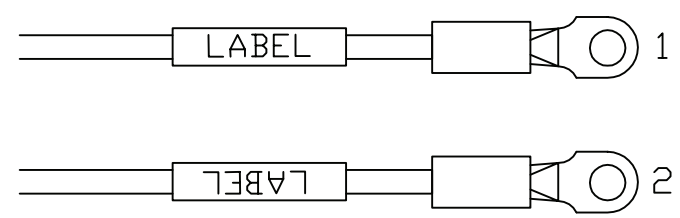

QTY.	PART NO.	DESCRIPTION	FIND NO.
SEE TABLE 1	5855-1	ALPHAWIRE - HOOK-UP WIRE, MIL-W-16878E, 22AWG, STRANDED, TFE JACKET, WHITE	3
SEE TABLE 1	5859-1	ALPHAWIRE - HOOK-UP WIRE, MIL-W-16878E, 14AWG, STRANDED, TFE JACKET, WHITE	3
SEE TABLE 1	5859-2	ALPHAWIRE - HOOK-UP WIRE, MIL-W-16878E, 14AWG, STRANDED, TFE JACKET, BLACK	3
SEE TABLE 1	5859-4	ALPHAWIRE - HOOK-UP WIRE, MIL-W-16878E, 14AWG, STRANDED, TFE JACKET, GREEN	3
26	RA18-6	THOMAS & BETTS - TERMINAL, RING, INSULATED, NYLON, 16AWG-22AWG, RED, #6 STUD	1
20	RB14-4	THOMAS & BETTS - TERMINAL, RING, INSULATED, NYLON, 14AWG - 18AWG, BLUE, #4 STUD	1
41	RB14-6	THOMAS & BETTS - TERMINAL, RING, INSULATED, NYLON, 14AWG - 18AWG, BLUE, #6 STUD	1
8	RB14-10	THOMAS & BETTS - TERMINAL, RING, INSULATED, NYLON, 14AWG - 18AWG, BLUE, #10 STUD	1
1	RB14-14	THOMAS & BETTS - TERMINAL, RING, INSULATED, NYLON, 14AWG - 18AWG, BLUE, 1/4 STUD	1
96	PSPT-125-175YL	BRADY - PERMASLEEVE WIRE MARKER SLEEVE, HEATSHRINK	2

NOTES:
DIMENSIONS - INCHES

FEDERAL AVIATION ADMINISTRATION
6500 S. MACARTHUR BLVD - BLDG 227
OKLAHOMA CITY, OK 73169

LRR ENCODER REPLACEMENT
POWER DISTRIBUTION UNIT
RING TERMINAL TO RING TERMINAL

DRAWN BY:		SIZE	FSCM NO.	DWG NO.	REV
CFORD	04/30/2008	D		LRR-000067-0016	B
CHECKED BY:		SCALE NONE		SHEET 1 OF 2	

X:\Projects\LRR_ENCODER_REPLACEMENT\JCF\APU\PDU2\dwg\LRR-000067-0016 - RingToRing.dwg
PLOT DATE: 08/01/2010

REVISIONS				
ZONE	REV	DESCRIPTION	DATE	APPROVED
	-	ORIGINAL DRAWING	05/26/2008	

TABLE 1

PART NO.	LENGTH (IN)	WIRE	TERMINAL P1	LABEL MARKING P1	LABEL ORIENTATION	TERMINAL P2	LABEL MARKING P2	LABEL ORIENTATION
W146	20	5859-1	RB14-6	W146/A2TB13-1	2	RB14-10	W146/PS1/+24V	2
W148	26.25	5859-1	RB14-6	W148/A2TB13-3	2	RB14-10	W148/PS2/+24V	2
W26	13	5859-1	RB14-6	W26/A2TB01-1	2	RB14-10	W26/PS1/+5V_RET	2
W29	17.75	5859-1	RB14-6	W29/A2TB01-4	2	RB14-10	W29/PS2/+5V_RET	2
W37	18.5	5859-1	RB14-6	W37/A2TB02-2	2	RB14-10	W37/PS1/+24V_RET	2
W66	14.5	5859-1	RB14-6	W66/A2TB05-1	2	RB14-10	W66/PS1/+5V	2
W68	20.25	5859-1	RB14-6	W68/A2TB05-3	2	RB14-10	W68/PS2/+5V	2
W99	24.75	5859-1	RB14-6	W99/A2TB08-4	1	RB14-10	W99/PS2/+24V_RET	2
W5	7	5859-4	RB14-6	W5/TB1-5	1	RB14-14	W5/GND-STUD	2
W106	19.75	5859-1	RB14-6	W106/A2TB09-1	2	RB14-4	W106/PS1/+15V	2
W108	25.75	5859-1	RB14-6	W108/A2TB09-3	2	RB14-4	W108/PS2/+15V	2
W126	20	5859-1	RB14-6	W126/A2TB11-1	1	RB14-4	W126/PS1/-15V	2
W128	26	5859-1	RB14-6	W128/A2TB11-3	1	RB14-4	W128/PS2/-15V	2
W166	21	5859-1	RB14-6	W166/A2TB15-1	1	RB14-4	W166/PS1/+12V_REF	2
W168	27.5	5859-1	RB14-6	W168/A2TB15-3	1	RB14-4	W168/PS2/+12V_REF	2
W177	26.75	5859-1	RB14-6	W177/A2TB16-2	1	RB14-4	W177/PS1/+12V_REF_RET	2
W178	32	5859-1	RB14-6	W178/A2TB16-3	1	RB14-4	W178/PS2/+12V_REF_RET	2
W27	13	5859-1	RB14-6	W27/A2TB01-2	2	RB14-4	W27/PS1/+12V_RET	2
W28	13.5	5859-1	RB14-6	W28/A2TB01-3	2	RB14-4	W28/PS1/-12V_RET	2
W30	20.25	5859-1	RB14-6	W30/A2TB01-5	2	RB14-4	W30/PS2/+12V_RET	2
W31	20.75	5859-1	RB14-6	W31/A2TB01-6	2	RB14-4	W31/PS2/-12V_RET	2
W35	18.5	5859-1	RB14-6	W35/A2TB01-10	2	RB14-4	W35/PS1/+15V_RET	2
W36	19.5	5859-1	RB14-6	W36/A2TB02-1	2	RB14-4	W36/PS1/-15V_RET	2
W46	13.5	5859-1	RB14-6	W46/A2TB03-1	1	RB14-4	W46/PS1/+12V	2
W48	19.75	5859-1	RB14-6	W48/A2TB03-3	1	RB14-4	W48/PS2/+12V	2
W86	15.75	5859-1	RB14-6	W86/A2TB07-1	1	RB14-4	W86/PS1/-12V	2
W88	21.5	5859-1	RB14-6	W88/A2TB07-3	1	RB14-4	W88/PS2/-12V	2
W97	27.25	5859-1	RB14-6	W97/A2TB08-2	1	RB14-4	W97/PS2/+15V_RET	2
W98	27.25	5859-1	RB14-6	W98/A2TB08-3	1	RB14-4	W98/PS2/-15V_RET	2
W10	16	5859-4	RB14-6	W10/TB1-7	1	RB14-6	W10/PS1-PE	1
W11	14.5	5859-1	RB14-6	W11/TB1-10	1	RB14-6	W11/PS1-N	1
W14	13.5	5859-2	RB14-6	W14/TB1-12	1	RB14-6	W14/PS1-H	1
W2	12	5859-2	RB14-6	W2/TB1-1	1	RB14-6	W2/PS2-H	1
W3	11.5	5859-1	RB14-6	W3/TB1-3	1	RB14-6	W3/PS2-N	1
W8	10.5	5859-4	RB14-6	W8/TB1-6	1	RB14-6	W8/PS2-PE	1
W170	44.75	5855-1	RA18-6	W170/A2TB15-5	1	RA18-6	W170/A3-2	2
W171	42.5	5855-1	RA18-6	W171/A2TB15-6	1	RA18-6	W171/A7-2	2
W172	43	5855-1	RA18-6	W172/A2TB15-7	1	RA18-6	W172/A6-2	2
W173	49	5855-1	RA18-6	W173/A2TB15-8	1	RA18-6	W173/A5-2	2
W174	46	5855-1	RA18-6	W174/A2TB15-9	1	RA18-6	W174/A4-2	2
W175	47.5	5855-1	RA18-6	W175/A2TB15-10	1	RA18-6	W175/A8-2	2
W179	48.5	5855-1	RA18-6	W179/A2TB16-4	1	RA18-6	W179/A3-1	1
W180	50	5855-1	RA18-6	W180/A2TB16-5	1	RA18-6	W180/A7-1	1
W181	47	5855-1	RA18-6	W181/A2TB16-6	1	RA18-6	W181/A6-1	1
W182	56.5	5855-1	RA18-6	W182/A2TB16-7	1	RA18-6	W182/A5-1	1
W183	53.5	5855-1	RA18-6	W183/A2TB16-8	1	RA18-6	W183/A4-1	1
W184	57	5855-1	RA18-6	W184/A2TB16-9	1	RA18-6	W184/A8-1	1
W161	3.5	5855-1	RA18-6	W161/A2TB14-6	2	RA18-6	W161/A2TB16-4	1

NOTES:
DIMENSIONS - INCHES

FEDERAL AVIATION ADMINISTRATION
6500 S. MACARTHUR BLVD - BLDG 227
OKLAHOMA CITY, OK 73169

LRR ENCODER REPLACEMENT
POWER DISTRIBUTION UNIT
RING TERMINAL TO RING TERMINAL

DRAWN BY: CFORD 05/28/2008
CHECKED BY:
SIZE D | FSCM NO. | DWG NO. LRR-000067-0016 | REV A
SCALE NONE | SHEET 2 OF 2

C:\Documents and Settings\chris ctr ford\Desktop\PDU\dwg\LRR-000067-0016 - RingToRing.dwg
PLOT DATE: 04/13/2009

REVISIONS				
ZONE	REV	DESCRIPTION	DATE	APPROVED
	-	ORIGINAL DRAWING	05/05/2008	

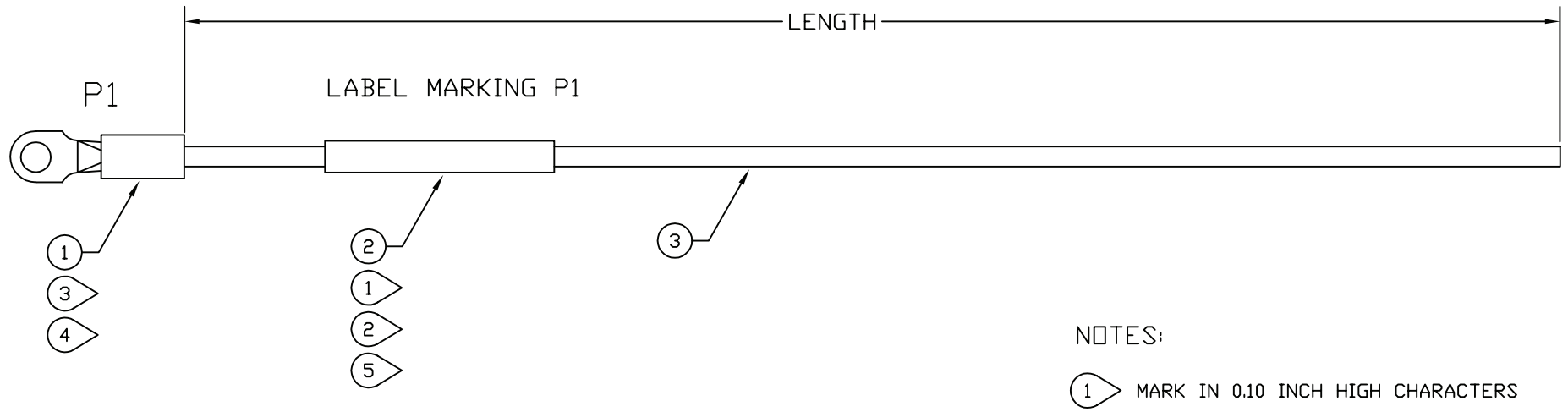

NOTES:

1. MARK IN 0.10 INCH HIGH CHARACTERS
2. SHRINK TUBING PER MANUFACTURER INSTRUCTIONS
3. CRIMP TERMINALS PER MANUFACTURER INSTRUCTIONS
4. ASSEMBLE PER MANUFACTURER INSTRUCTIONS
5. CABLE LABEL TO BE WITHIN 1 INCH OF APPROPRIATE CONNECTOR END

TABLE 1

PART NO.	LENGTH	WIRE	TERMINAL P1	LABEL MARKING P1
W15	55.5	5859-4	RB14-14	W15/GND-STUD

QTY.	PART NO.	DESCRIPTION	FIND NO.
SEE TABLE 1	5859-4	ALPHAWIRE - HOOK-UP WIRE, MIL-W-16878E, 14AWG, STRANDED, TFE JACKET, GREEN	3
1	RB14-14	THOMAS & BETTS - TERMINAL, RING, INSULATED, NYLON, 14AWG - 18AWG, BLUE, 1/4" STUD	1
1	PSPT-125-175YL	BRADY - PERMASLEEVE WIRE MARKER SLEEVE, HEATSHRINK	2

NOTES:
DIMENSIONS - INCHES

FEDERAL AVIATION ADMINISTRATION
6500 S. MACARTHUR BLVD - BLDG 227
OKLAHOMA CITY, OK 73169

LRR ENCODER REPLACEMENT
POWER DISTRIBUTION UNIT
RING TERMINAL TO FEMALE DISCONNECT

DRAWN BY: CFORD 04/30/2008
CHECKED BY:

SIZE	FSCM NO.	DWG NO.	REV
D		LRR-000067-0017	A

SCALE NONE SHEET 1 OF 1

C:\Documents and Settings\chris ctr ford\Desktop\pdu latest\dwg\LRR-000067-0017 - RingToWireForGNDStuds.dwg
PLOT DATE: 02/14/2009

REVISIONS				
ZONE	REV	DESCRIPTION	DATE	APPROVED
	-	ORIGINAL DRAWING	05/26/08	

POWER DISTRIBUTION BOARD (A2)
PS_DIST_BRD

FABRICATION DRAWING PAGE 2
BILL OF MATERIALS PAGE 3

NOTES:
DIMENSIONS - INCHES

FEDERAL AVIATION ADMINISTRATION
6500 S. MACARTHUR BLVD - BLDG 227
OKLAHOMA CITY, OK 73169

PS_DIST_BRD REV B
PARTS LIST

DRAWN BY:	SIZE	FSCM NO.	DWG NO.	REV
CFORD 05/26/2008	D		LRR-000067-0018	E
CHECKED BY:	SCALE NONE		SHEET 1 OF 3	

X:\Projects\LRR_ENCODER_REPLACEMENT\JCF\APU\PDU\Drawing Package\Autocad Files\Updated\LRR-000067-0018A - PS_DIST_BRD TOC.dwg
PLOT DATE: 06/29/2010

DWG. NO.	SH	REV.

REVISIONS

ZONE	REV	DESCRIPTION	DATE	APPROVED

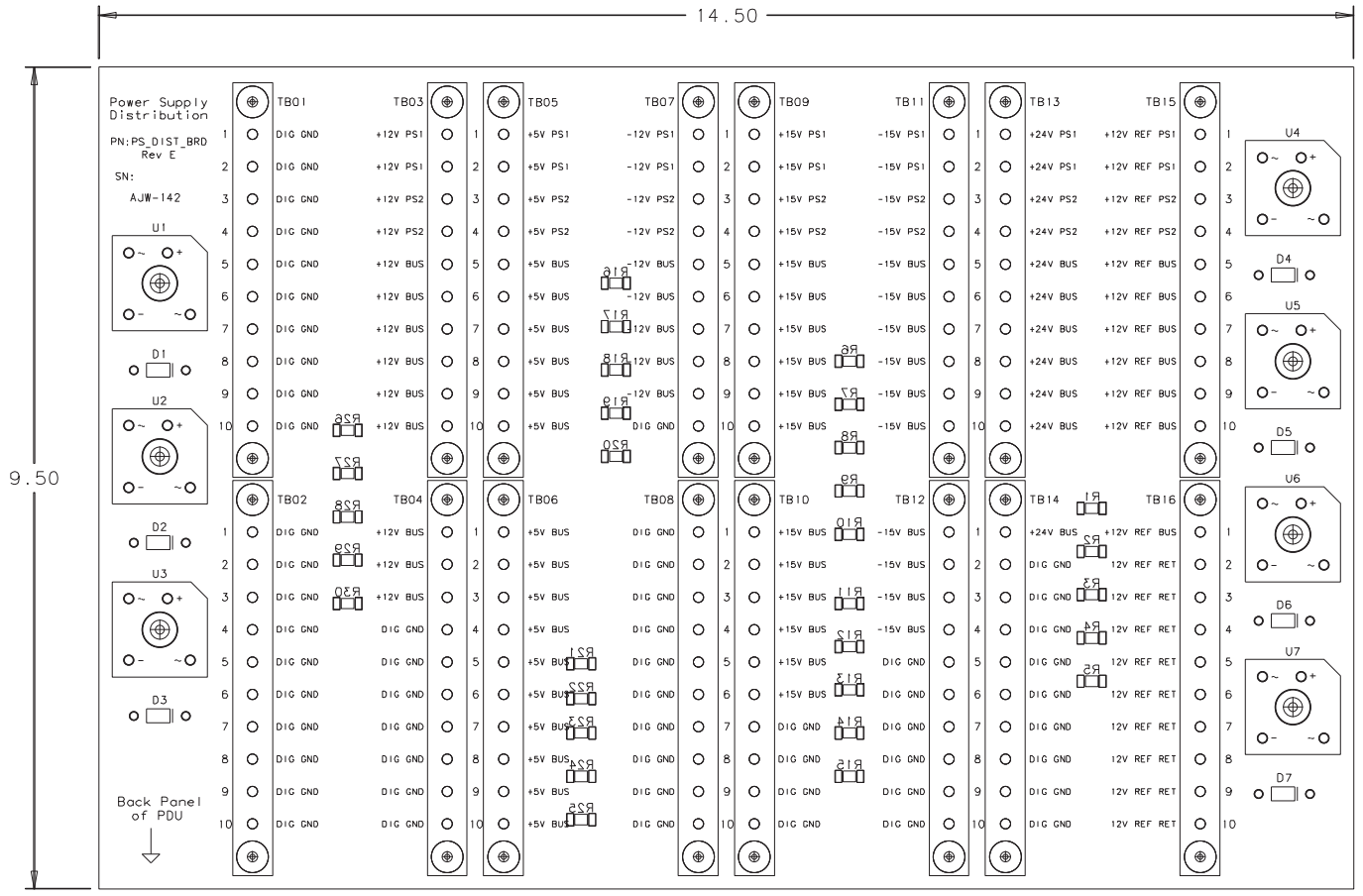

BOARD's DRILL SCHEDULE

DRILL SYMBOL	DRILL SIZE	COUNT	PLATED	Min/Max
○	.055	14	YES	---
⊞	.067	28	YES	---
⊕	.076	160	YES	---
⊟	.125	32	YES	---
⊖	.234	7	YES	---

MFG NOTES:
- Layers: 7
- Material: 0.093" FR4
- Dimensions: 14.5" x 9.5"
- Plating: Lead Free Solder
- Cu Weight: 2 .oz min
- Inner Layer Cu Weight: 2 .oz min
- Plated Slots: No
- Gold Fingers: None
- Soldermask: Both Sides with LPI
- Soldermask Color: Green
- Counter Sinks: No
- Counter Bores: No
- CNC Route points: 4
- Tab Route: No
- Scoring: No
- Plated Edges: No
- Controlled Dialectric: No
- Controlled Impedance: No
- Inspected to IPC-A-600G, Class 2
- All holes plated through

COMPONENT PLACEMENT NOTES:

General: All thru-hole parts should be inserted from the top side of the board. The top side has the terminal block silkscreen's shown.

Diodes: The line on the diode should be oriented to match the same side as the silkscreen line on the board.

Heatsinks: Add heatsinks to the rectifiers after they have been soldered onto the board.

Terminal Blocks: Use 3/4" #4-40 screws, nuts, and washers to secure the terminal blocks to the board before soldering.

THIS SHEET IS COMPUTER GENERATED

5	4	3	2	1	REVISION	REV STATUS OF SHEETS
					SHEET	

		PART DASH NO.	NEXT	FINAL	NEXT ASSY	USED ON
WEIGHTS			QTY REQD PER ASSY		APPLICATION	
STRESS						
MATERIALS & PROCESSES						
MANUFACTURING ENGINEERING						
QUALITY ASSURANCE						
ADDITIONAL APPROVALS	DATE					

UNLESS OTHERWISE SPECIFIED DIMENSIONS ARE IN INCHES
TOLERANCES ARE:
FRACTIONS DECIMALS ANGLES
.XX
.XXX
DO NOT SCALE DRAWING

TREATMENT

FINISH

SIMILAR TO | ACT. WT | CALC WT

CONTRACT NO.

APPROVALS	DATE
DRAWN Chris Ford	05/22/08
CHECKED	
ISSUED	

FEDERAL AVIATION ADMINISTRATION
MIKE MONRONEY AERO CENTER OKLAHOMA CITY, OK 73169

TITLE
Power Supply Distribution Board Fabrication Drawing

SIZE	FSCM NO.	DWG. NO.	REV.
D		LRR-000067-0018	E

SCALE | SHEET 2 of 3

REVISIONS				
ZONE	REV	DESCRIPTION	DATE	APPROVED
	-	ORIGINAL DRAWING	05/26/08	

Parts:

DESCRIPTION	REFERENCE DESIGNATOR	PART #	MANUFACTURER	TOTAL QUANTITY
Terminal Block, 10 Pos., 0.375" Spacing	TB1	38720-6210	Molex	16
Terminal Block, 10 Pos., 0.375" Spacing	TB2	38720-6210	Molex	
Terminal Block, 10 Pos., 0.375" Spacing	TB3	38720-6210	Molex	
Terminal Block, 10 Pos., 0.375" Spacing	TB4	38720-6210	Molex	
Terminal Block, 10 Pos., 0.375" Spacing	TB5	38720-6210	Molex	
Terminal Block, 10 Pos., 0.375" Spacing	TB6	38720-6210	Molex	
Terminal Block, 10 Pos., 0.375" Spacing	TB7	38720-6210	Molex	
Terminal Block, 10 Pos., 0.375" Spacing	TB8	38720-6210	Molex	
Terminal Block, 10 Pos., 0.375" Spacing	TB9	38720-6210	Molex	
Terminal Block, 10 Pos., 0.375" Spacing	TB10	38720-6210	Molex	
Terminal Block, 10 Pos., 0.375" Spacing	TB11	38720-6210	Molex	
Terminal Block, 10 Pos., 0.375" Spacing	TB12	38720-6210	Molex	
Terminal Block, 10 Pos., 0.375" Spacing	TB13	38720-6210	Molex	
Terminal Block, 10 Pos., 0.375" Spacing	TB14	38720-6210	Molex	
Terminal Block, 10 Pos., 0.375" Spacing	TB15	38720-6210	Molex	
Terminal Block, 10 Pos., 0.375" Spacing	TB16	38720-6210	Molex	
TVS Diode, Vbr 27V	D1	1N6281AG	ON Semiconductor	3
TVS Diode, Vbr 27V	D3	1N6281AG	ON Semiconductor	
TVS Diode, Vbr 27V	D4	1N6281AG	ON Semiconductor	
TVS Diode, Vbr 10V	D2	1N6271AG	ON Semiconductor	1
TVS Diode, Vbr 51V	D5	1N6288AG	ON Semiconductor	1
TVS Diode, Vbr 33V	D6	1N6283AG	ON Semiconductor	2
TVS Diode, Vbr 33V	D7	1N6283AG	ON Semiconductor	
Bridge Rectifier, 35A	U1	GBPC3506W	Fairchild Semiconductor	7
Bridge Rectifier, 35A	U2	GBPC3506W	Fairchild Semiconductor	
Bridge Rectifier, 35A	U3	GBPC3506W	Fairchild Semiconductor	
Bridge Rectifier, 35A	U4	GBPC3506W	Fairchild Semiconductor	
Bridge Rectifier, 35A	U5	GBPC3506W	Fairchild Semiconductor	
Bridge Rectifier, 35A	U6	GBPC3506W	Fairchild Semiconductor	
Bridge Rectifier, 35A	U7	GBPC3506W	Fairchild Semiconductor	
BGA Heatsink, 28mm, Omindirectional		658-60ABT3	Wakefield	7
BGA Heatsink, 28mm, Omindirectional		658-60ABT3	Wakefield	
BGA Heatsink, 28mm, Omindirectional		658-60ABT3	Wakefield	
BGA Heatsink, 28mm, Omindirectional		658-60ABT3	Wakefield	
BGA Heatsink, 28mm, Omindirectional		658-60ABT3	Wakefield	
BGA Heatsink, 28mm, Omindirectional		658-60ABT3	Wakefield	
BGA Heatsink, 28mm, Omindirectional		658-60ABT3	Wakefield	
#4-40 Screws, 3/4", Pan-Head Phillips, Stainless Steel				32
#4-40 Nuts, Stainless Steel				32
#4 Flat Washers				32

NOTES:
DIMENSIONS - INCHES

FEDERAL AVIATION ADMINISTRATION
6500 S. MACARTHUR BLVD - BLDG 227
OKLAHOMA CITY, OK 73169

PS_DIST_BRD REV B
PARTS LIST

DRAWN BY: CFORD 05/26/2008
CHECKED BY:

SIZE D | FSCM NO. | DWG NO. LRR-000067-0018 | REV E

SCALE NONE | SHEET 3 OF 3

X:\Projects\LRR_ENCODER_REPLACEMENT\JCF\APU\PDU\Drawing Package\Autocad Files\Updated\LRR-000067-0018C - PS_DIST_BRD PARTS.dwg
PLOT DATE: 06/29/2010

REVISIONS				
ZONE	REV	DESCRIPTION	DATE	APPROVED

POWER SUPPLY MONITOR - A1

TABLE OF CONTENTS

PAGE TITLE:	PAGE #:
Fabrication Drawing	2
Bill Of Materials	3

REV.
SH
DWG. NO.

5	4	3	2	1	REVISION	REV STATUS OF SHEETS
					SHEET	

WEIGHTS	
STRESS	
MATERIALS & PROCESSES	
MANUFACTURING ENGINEERING	
QUALITY ASSURANCE	
ADDITIONAL APPROVALS	DATE

PART DASH NO.	NEXT	FINAL	NEXT ASSY	USED ON
	QTY REQD PER ASSY		APPLICATION	

UNLESS OTHERWISE SPECIFIED
DIMENSIONS ARE IN INCHES
TOLERANCES ARE:
FRACTIONS DECIMALS ANGLES
.XX
.XXX
DO NOT SCALE DRAWING

TREATMENT

FINISH

SIMILAR TO | ACT. WT | CALC WT

CONTRACT NO.

APPROVALS	DATE
DRAWN CFORD	4/21/09
CHECKED	
ISSUED	

TITLE PSM

SIZE	FSCM NO.	DWG. NO.	REV.
C		AE-B-2044	E

SCALE | SHEET 1 OF 3

THIS SHEET IS COMPUTER GENERATED

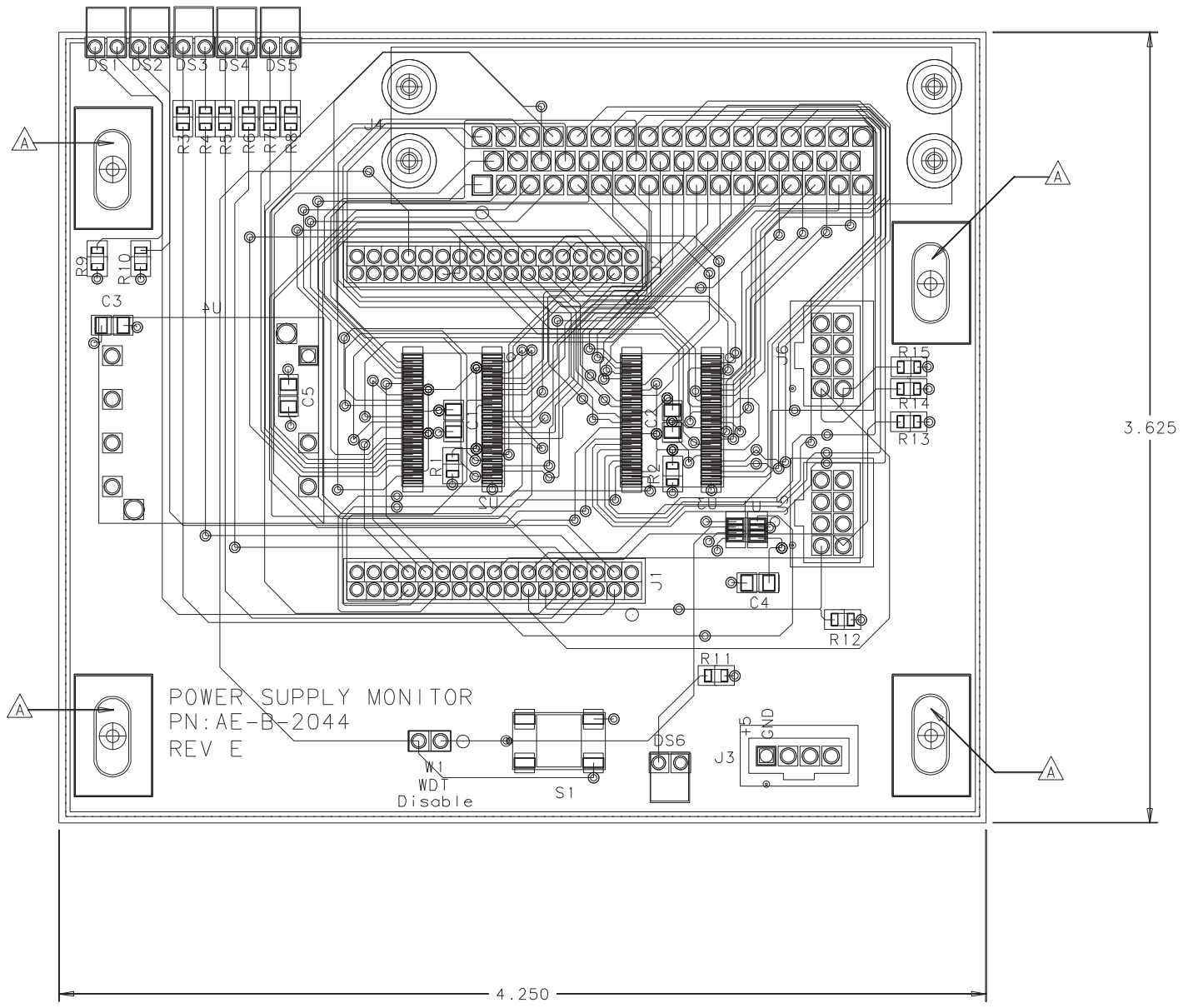

MASTER DRILL SCHEDULE

DRILL SYMBOL	DRILL SIZE	COUNT	PLATED	Min/Max
○	.015	103	YES	---
⊞	.036	80	YES	---
⦶	.041	2	YES	---
⊟	.043	27	YES	---
⊖	.052	50	YES	---
◫	.0625	2	YES	---
⊕	.12	4	YES	---
□	.125	4	YES	---

Layers: 8
Material: 0.062" FR4
Dimensions: 4.25" x 3.625"
Plating: Lead Free Solder
Cu Weight: 1 .oz min
Inner Layer Cu Weight: 1 .oz min
All holes plated through
Gold Fingers: None
Soldermask: Both Sides with LPI
Soldermask Color: Green
CNC Route points: 4
Tab Route: No
Scoring: No
Plated Edges: No
Controlled Dielectric: No
Controlled Impedance: No
Inspected to IPC-A-600G, Class 2

PLACEMENT NOTES:
-S1 HAS A CIRCLE TO INDICATE THE SIDE TO HAVE THE METAL SIDE OF THE SWITCH FACE
-USE #4-40 HARDWARE (SCREW,LOCK,FLAT,NUT) TO FASTEN THE 50 PIN CONNECTOR TO THE PSM
-ALL LED'S SHOULD FACE AWAY FROM THE CENTER OF THE BOARD
-CIRCLE/DOTS INDICATE PIN 1 FOR THE CONNECTORS

A - 0.15 inch wide, 0.35 inch long, vertical slot centered on drill hole

INSTALLATION INSTRUCTIONS:
-MOUNT PSM BOARD ONTO THE 4 STANDOFFS IN THE BOTTOM OF THE PDU. THE LED'S SHOULD FACE OUT THE REAR OF THE PDU CHASSIS.
-USE THE FOLLOWING HARDWARE 4X(#4-40 PAN-HEAD PHILLIPS SCREW 3/8" LENGTH, #4 FLAT WASHER, #4 SPLIT WASHER)
-INSTALL PROVIDED RABBIT CORE MODULE INTO TOP OF COMPLETED PSM CARD.
-INSTALL PDU INTERNAL CABLES TO PSM ACCORDING TO LABELING.

UNLESS OTHERWISE SPECIFIED DIMENSIONS ARE IN INCHES TOLERANCES ARE: FRACTIONS DECIMALS ANGLES .XX .XXX DO NOT SCALE DRAWING

TREATMENT
FINISH
SIMILAR TO | ACT. WT | CALC WT

CONTRACT NO.

APPROVALS	DATE
DRAWN CFORD	4/21/09
CHECKED	
ISSUED	

TITLE PSM - Fabrication Drawing

SIZE D | FSCM NO. | DWG. NO. AE-B-2044 | REV. E
SCALE | SHEET 2 OF 3

THIS SHEET IS COMPUTER GENERATED

PSM Parts List

Ref Des	Qty	Part Number	Description	Manufacturer
U1	1	MAX6370KA	Watchdog Timer	Maxim
U2, U3	2	DS89C386TMEA/NOPB	12 Channel Differential Rx	National Semiconductor
U4	1	CC6-0503SF-E	3.3V DC-DC Converter	Lambda
J1, J2	2	SQT-117-01-F-D	2x17 2mm Socket, PCB Mount	Samtec
J3	1	90136-1104	.100" Pitch, 4 Position PCB Header (for Power)	Molex
J4	1	747193-1	DB50, 90 degree, PCB Mount	AMP
J5, J6	2	90130-1108	.100" Pitch, 8 Position PCB Header (for I2C)	Molex
DS1	1	WP934CB/ID	3mm LED, PCB mount, Red	Kingbright
DS2	1	WP934CB/YD	3mm LED, PCB mount, Yellow	Kingbright
DS3 - DS5	3	WP937CB/EGW	3mm LED, PCB mount, Red/Green	Kingbright
DS6	1	WP934CB/GD	3mm LED, PCB mount, Green	Kingbright
R1, R2	2	RR1220P-1131-D-M	Metal Film Resistor, 1130.0 ohm, 100V, .5%	Susumu
R3 - R8	6	RR1220Q-54R9-D-M	Metal Film Resistor, 54.9 ohm, 100V, .5%	Susumu
R9 - R11	3	RR1220P-1070-D-M	Metal Film Resistor, 107.0 ohm, 100V, .5%	Susumu
R12 - R15	4	RR1220P-1401-D-M	Metal Film Resistor, 1401.0 ohm, 100V, .5%	Susumu
C1 - C4	4	C1206C104K5RAC-TU	Capacitor, .1uf, 50V, 10%	Kemet
C5	1	C1206C105K3RAC-TU	Capacitor, 1uf, 25V, 10%	Kemet
W1	1	TSW-102-08-F-S	.100" Pitch, 2 Position PCB Header (WDT Jumper)	Samtec
	1	SNT-100-BK-G	.100" Pitch, 2 Position Jumper	Samtec
S1	1	GP11MSABE	SPST Pushbutton Switch, .4VA at 20VAC/DC	C&K Components
	4		#4-40 Screw, S/S, Panhead Phillips, 3/8"	
	4		#4 Flat Washer, S/S	
	4		#4 Split Washer, S/S	

REVISIONS				
ZONE	REV	DESCRIPTION	DATE	APPROVED
	-	ORIGINAL DRAWING	05/05/2008	

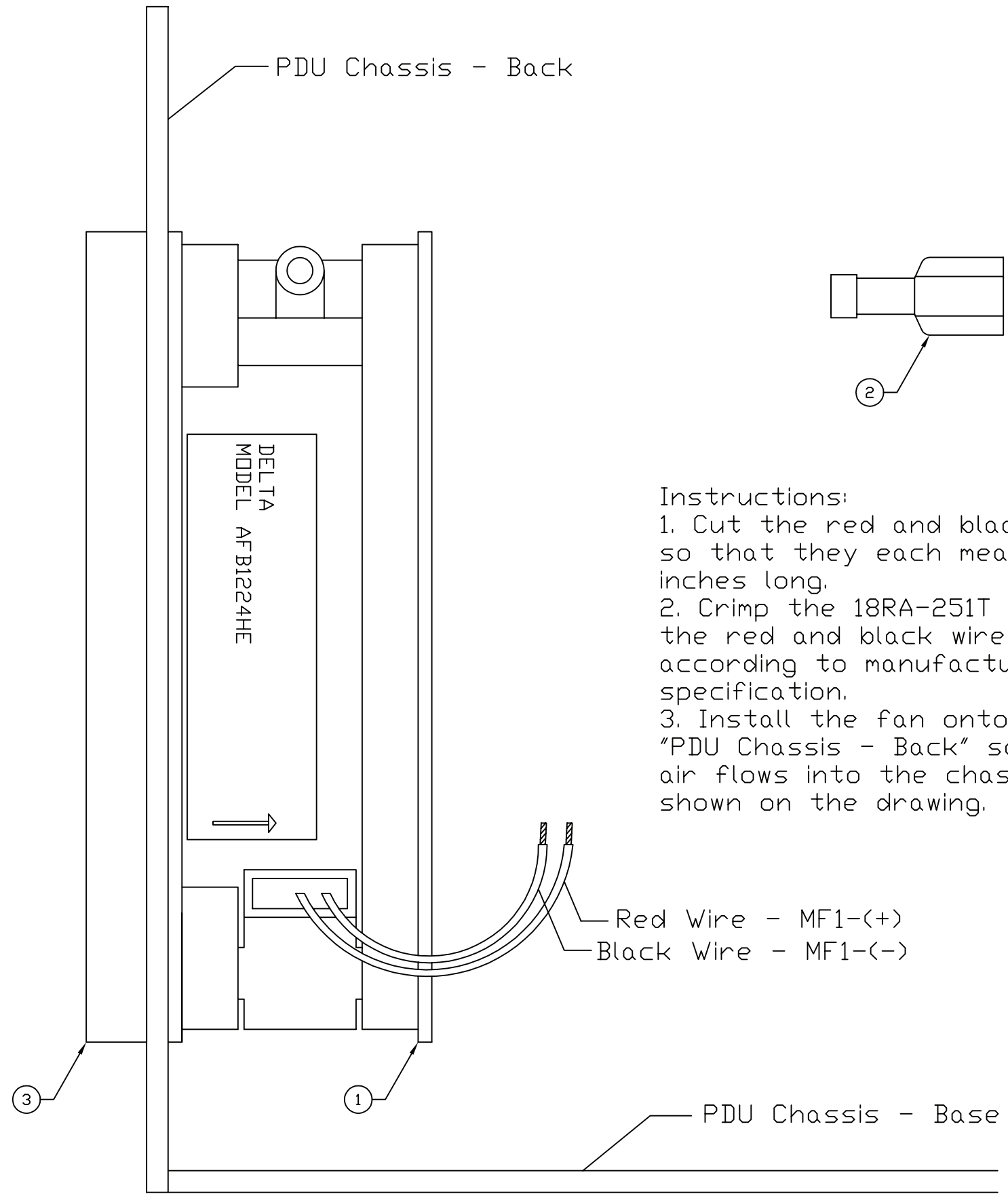

Instructions:
1. Cut the red and black wires so that they each measure 4 inches long.
2. Crimp the 18RA-251T onto the red and black wires according to manufacturers specification.
3. Install the fan onto the "PDU Chassis - Back" so that air flows into the chassis, as shown on the drawing.

QTY.	PART NO.	DESCRIPTION	FIND NO.
1	8205-5005-0413 -MOD	TECH-ETCH - EMI MUFFIN FAN FILTER	3
2	18RA-251T	THOMAS & BETTS - QUICK CONNECT, MALE, INSULATED, NYLON, 16AWG - 22AWG, RED	2
1	AFB1224HE	DELTA - 24VDC FAN, 120X120MM	1

NOTES:
DIMENSIONS - INCHES

FEDERAL AVIATION ADMINISTRATION
6500 S. MACARTHUR BLVD - BLDG 227
OKLAHOMA CITY, OK 73169

LRR ENCODER REPLACEMENT
POWER DISTRIBUTION UNIT
MUFFIN FAN

DRAWN BY: CFORD 06/12/2008
CHECKED BY:

SIZE D | FSCM NO. | DWG NO. LRR-000067-0019 | REV A
SCALE NONE | SHEET 1 OF 1

C:\Documents and Settings\chris ctr ford\Desktop\pdu latest\dwg\LRR-000067-0019 - MuffinFan.dwg
PLOT DATE: 02/14/2009

REVISIONS				
ZONE	REV	DESCRIPTION	DATE	APPROVED
	-	ORIGINAL DRAWING	05/05/2008	

POWER SUPPLY INPUTS

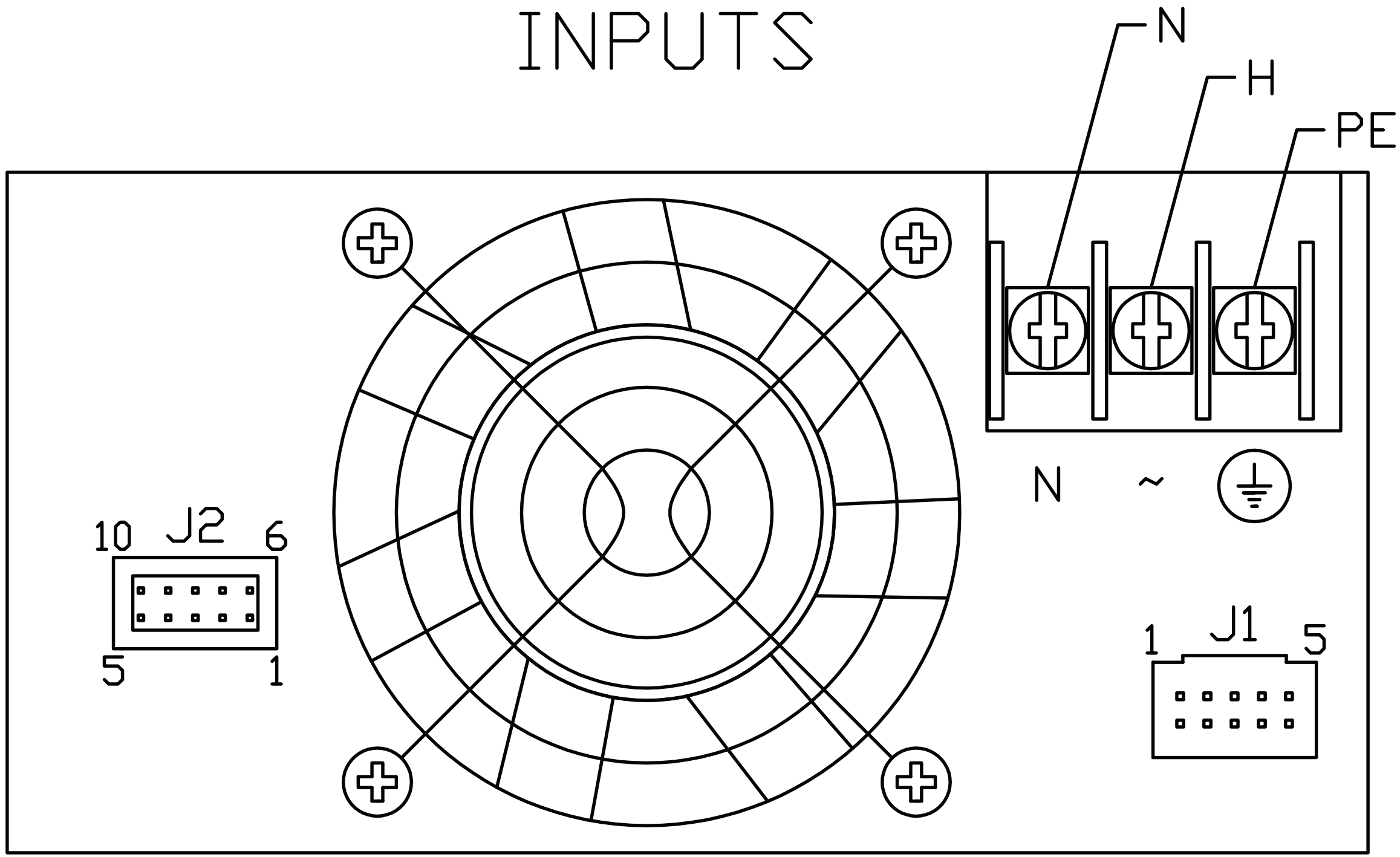

NOTES:
DIMENSIONS - INCHES

FEDERAL AVIATION ADMINISTRATION
6500 S. MACARTHUR BLVD - BLDG 227
OKLAHOMA CITY, OK 73169

LRR ENCODER REPLACEMENT
POWER DISTRIBUTION UNIT
POWER SUPPLY - INPUTS

DRAWN BY:	SIZE	FSCM NO.	DWG NO.	REV
CFORD 04/30/2008	D		LRR-000067-0020	A
CHECKED BY:	SCALE NONE		SHEET 1 OF 1	

C:\Documents and Settings\chris ctr ford\Desktop\pdu latest\dwg\LRR-000067-0020 - PowerSupplyInputs.dwg
PLOT DATE: 02/14/2009

REVISIONS				
ZONE	REV	DESCRIPTION	DATE	APPROVED
	-	ORIGINAL DRAWING	05/05/2008	

POWER SUPPLY OUTPUTS (PS1 AND PS2)

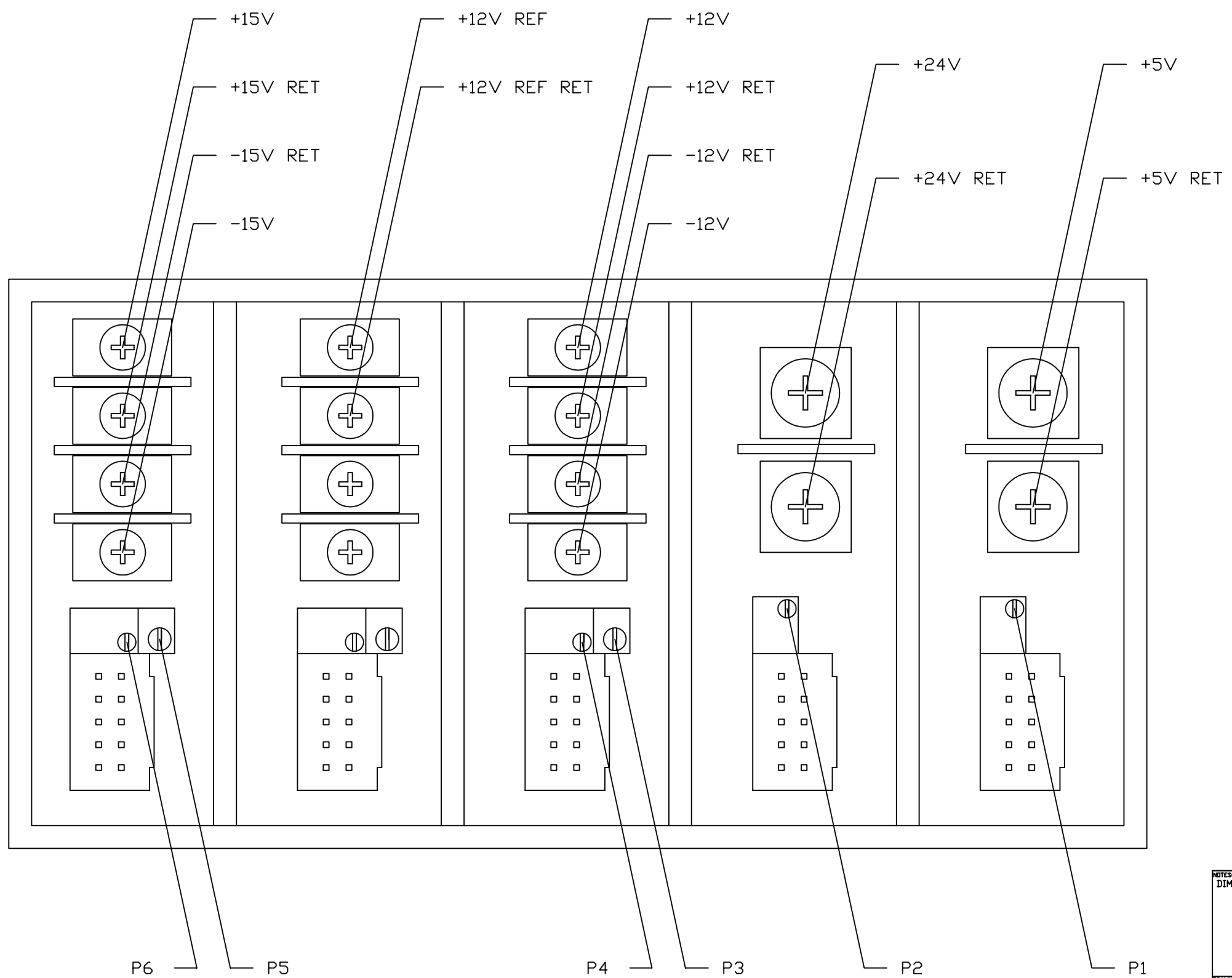

NOTES:
DIMENSIONS - INCHES

FEDERAL AVIATION ADMINISTRATION
6500 S. MACARTHUR BLVD - BLDG 227
OKLAHOMA CITY, OK 73169

LRR ENCODER REPLACEMENT
POWER DISTRIBUTION UNIT
POWER SUPPLY - OUTPUTS

DRAWN BY:	SIZE	FSCM NO.	DWG NO.	REV
CFORD 04/30/2008	D		LRR-000067-0021	A
CHECKED BY:	SCALE NONE		SHEET 1 OF 1	

C:\Documents and Settings\chris ctr ford\Desktop\pdu latest\dwg\LRR-000067-0021 - PowerSupplyOutputs.dwg
PLOT DATE: 02/14/2009

REVISIONS				
ZONE	REV	DESCRIPTION	DATE	APPROVED
	-	ORIGINAL DRAWING	05/05/2008	

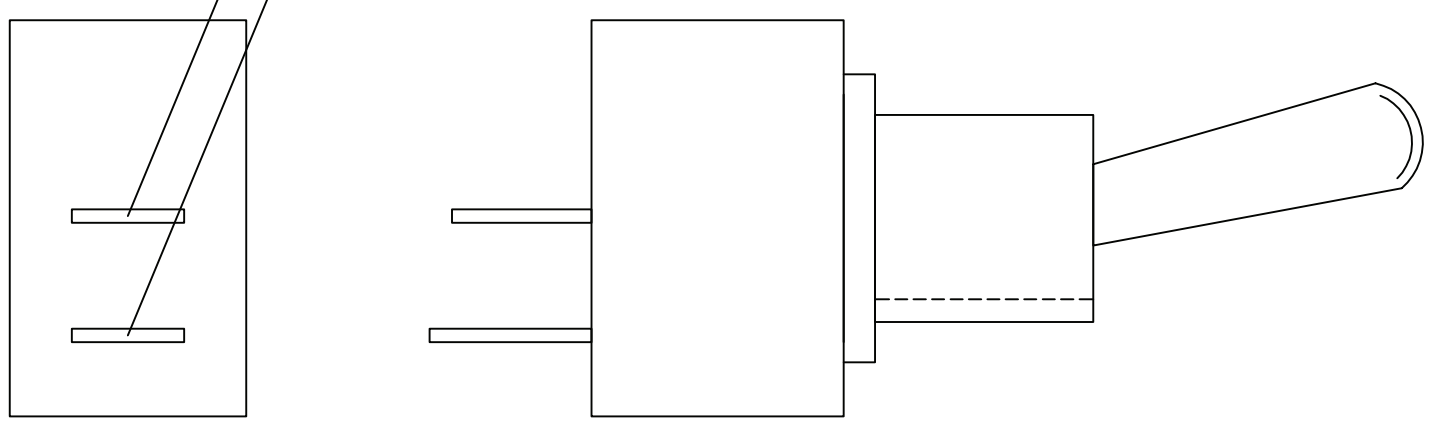

BACK VIEW

SIDE VIEW

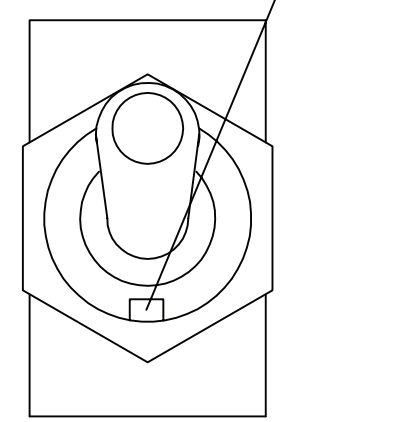

FRONT VIEW

Mounting Instructions: Install switch according to manufacturer's instructions with the key facing the bottom of the PDU Chassis.

NOTES:
DIMENSIONS - INCHES

FEDERAL AVIATION ADMINISTRATION
6500 S. MACARTHUR BLVD - BLDG 227
OKLAHOMA CITY, OK 73169

LRR ENCODER REPLACEMENT
POWER DISTRIBUTION UNIT
TOGGLE SWITCH

DRAWN BY:	SIZE	FSCM NO.	DWG NO.	REV
CFORD 04/30/2008	D		LRR-000067-0022	A
CHECKED BY:	SCALE NONE		SHEET 1 OF 1	

C:\Documents and Settings\chris ctr ford\Desktop\pdu latest\dwg\LRR-000067-0022 - ToggleSwitch.dwg
PLOT DATE: 02/14/2009

REVISIONS				
ZONE	REV	DESCRIPTION	DATE	APPROVED
	-	ORIGINAL DRAWING	05/05/2008	

LCD METERS BACK LAYOUT
(A3,A4,A5,A6,A7,A8)

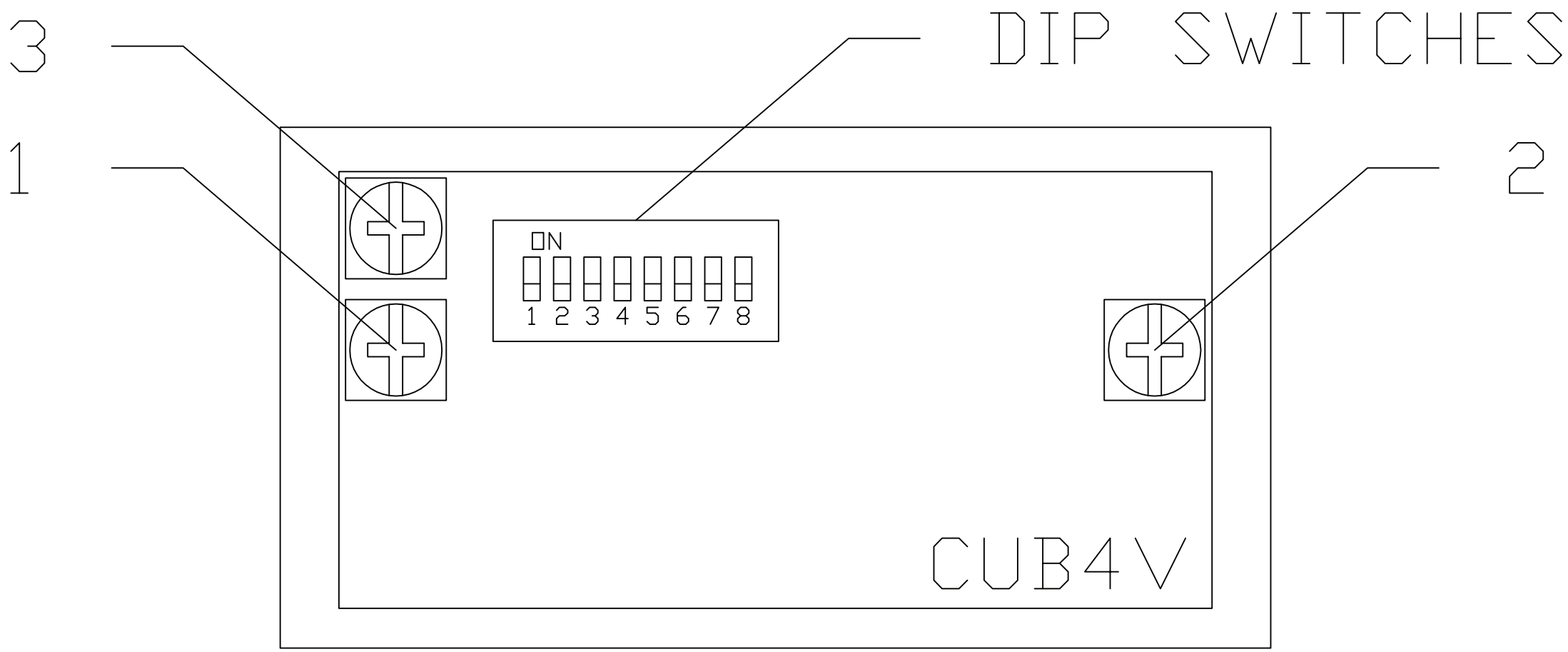

NOTES:
DIMENSIONS - INCHES

FEDERAL AVIATION ADMINISTRATION
6500 S. MACARTHUR BLVD - BLDG 227
OKLAHOMA CITY, OK 73169

LRR ENCODER REPLACEMENT
POWER DISTRIBUTION UNIT
LCD METERS BACK LAYOUT

DRAWN BY:	SIZE	FSCM NO.	DWG NO.	REV
CFORD 04/30/2008	D		LRR-000067-0023	A
CHECKED BY:	SCALE NONE		SHEET 1 OF 1	

C:\Documents and Settings\chris ctr ford\Desktop\pdu latest\dwg\LRR-000067-0023 - LCD Back.dwg
PLOT DATE: 02/14/2009

REVISIONS				
ZONE	REV	DESCRIPTION	DATE	APPROVED
	-	ORIGINAL DRAWING	05/26/08	

PDU Assembly Instructions

1.1 Assembly Summary- These procedures describe how to assemble the PDU. This includes general instructions for assembling the PDU chassis, installing the wire harnesses, connectors, and parts.

2.1 Materials and Equipment Required- #2 Phillips screwdriver, #1 Phillips screwdriver, Flat-head screwdriver, and a Crescent wrench.

3.1 Assembling the PDU- Assemble the PDU according to LRR-000067-0003.

4.1 Installing Parts- Install the parts using the hardware listed and according to reference designators, visual interpretation of LRR-000067-0003, and per manufacturer's instructions.

4.1.1 Power Supplies- Install the power supplies with the outputs facing the PDU Chassis - Front. Use LRR-000067-0020, LRR-000067-21, and LRR-000067-0003 for reference.

4.1.2 Muffin Fan- Install the muffin fan so that air flows into the chassis. Use LRR-000067-0019 and LRR-000067-0003 for reference.

4.1.3 Toggle Switches-Install the toggle switches using LRR-000067-0022 and LRR-000067-0003 for reference.

4.1.4 LCD Meters- Install the LCD meters so that the text reads in the same orientation as the text on the PDU Chassis - Front and using LRR-000067-0003 for reference.

4.15 PS_DIST_BRD- Install the PS_DIST_BRD (A2) using LRR-000067-0003 for reference. The silkscreen on the PCB should be visible when mounted. TB1 should be closest to the rotary switch on the front of the PDU.

4.16 Remaining Parts- Install the remaining parts using LRR-000067-0003 for reference.

5.1 Installing the Cables, Wires, and Wire Harnesses- Install these items according to LRR-000067-0003.

NOTES:
DIMENSIONS - INCHES

FEDERAL AVIATION ADMINISTRATION
6500 S. MACARTHUR BLVD - BLDG 227
OKLAHOMA CITY, OK 73169

POWER DISTRIBUTION UNIT
ASSEMBLY INSTRUCTIONS

DRAWN BY:	SIZE	FSCM NO.	DWG NO.	REV
CFORD 05/26/2008	D		LRR-000067-0024	A
CHECKED BY:	SCALE NONE		SHEET 1 OF 1	

C:\Documents and Settings\chris ctr ford\Desktop\pdu latest\dwg\LRR-000067-0024 - AssemblyProcedures.dwg
PLOT DATE: 02/14/2009

REVISIONS				
ZONE	REV	DESCRIPTION	DATE	APPROVED
	-	ORIGINAL DRAWING	05/26/08	

Configuration, Alignment, and Test Procedures

1.1 Configuration and Test Summary- These procedures describe how to setup the initial configuration for the PDU. This includes configuring the LCD display dipswitch settings and adjusting the voltage outputs from the power supply modules. The procedure for testing the output connectors is also described.

2.1 Materials and Equipment Required- The vendor performing the testing should provide a digital multi-meter and a small flathead screwdriver.

3.1 Setup- Before performing these procedures, verify that all wires in the PDU have been routed and terminated correctly.

3.2 Detach the PDU Chassis - Front Panel- Detach the PDU Chassis - Front Panel from the PDU so that you can access the backs of the LCD's.

3.3 Dipswitch Settings- Use LRR-000067-0023 for reference as you set the dipswitches on the LCD displays (A3, A4, A5, A6, A7, A8).

3.4 For A3, A4, A5, A6, and A7- On the back of the LCD, set switches 3 and 7 to the up (ON) position. The rest of the switches should be set to the down position.

3.5 For A8- On the back of the LCD, set switches 4 and 6 to the up (ON) position. The rest of the switches should be set to the down position.

NOTES:
DIMENSIONS - INCHES

FEDERAL AVIATION ADMINISTRATION
6500 S. MACARTHUR BLVD - BLDG 227
OKLAHOMA CITY, OK 73169

POWER DISTRIBUTION UNIT
TURN ON AND TEST PROCEDURES

DRAWN BY:	SIZE	FSCM NO.	DWG NO.	REV
CFORD 05/26/2008	D		LRR-000067-0025	A
CHECKED BY:	SCALE NONE		SHEET 1 OF 3	

C:\Documents and Settings\chris ctr ford\Desktop\pdu latest\dwg\LRR-000067-0025 - TurnOnProcedures.dwg
PLOT DATE: 02/14/2009

REVISIONS				
ZONE	REV	DESCRIPTION	DATE	APPROVED
	-	ORIGINAL DRAWING	05/26/08	

4.1 Setting the Bus Voltages- Use LRR-000067-0021 for reference. Unscrew the PDU Chassis - Front Panel from the PDU. Lay the Front Panel in front of the PDU so that the LCD meters can be seen and the power supply outputs can be accessed. Set the front rotary switch (SW1) to the furthest counter-clockwise ("Bus") position.

4.2.1 For PS1- Plug an AC power cord into J5. Turn the toggle switch PS1 (SW2) to the up ("ON") position.

4.2.2 Adjust PS1-P1- Adjust PS1-P1 with a small flathead screwdriver until the +5V LCD display reads "5.20".

4.2.3 Adjust PS1-P2- Adjust PS1-P2 with a small flathead screwdriver until the +24V LCD display reads "24.3".

4.2.4 Adjust PS1-P3- Adjust PS1-P3 with a small flathead screwdriver until the -12V LCD display reads "-12.45".

4.2.5 Adjust PS1-P4- Adjust PS1-P4 with a small flathead screwdriver until the +12V LCD display reads "+12.45".

4.2.6 Adjust PS1-P5- Adjust PS1-P5 with a small flathead screwdriver until the -15V LCD display reads "-15.55".

4.2.7 Adjust PS1-P6- Adjust PS1-P6 with a small flathead screwdriver until the +15V LCD display reads "+15.55".

4.2.8 Turn the PDU Off- Turn the toggle switch PS1 (SW2) to the down ("OFF") position. Unplug the AC power cord from J5.

4.3.1 For PS2- Plug an AC power cord into J6. Turn the toggle switch PS2 (SW3) to the up ("ON") position.

4.3.2 Adjust PS2-P1- Adjust PS2-P1 with a small flathead screwdriver until the +5V LCD display reads "5.20".

4.3.3 Adjust PS2-P2- Adjust PS2-P2 with a small flathead screwdriver until the +24V LCD display reads "24.3".

4.3.4 Adjust PS2-P3- Adjust PS2-P3 with a small flathead screwdriver until the -12V LCD display reads "-12.45".

4.3.5 Adjust PS2-P4- Adjust PS2-P4 with a small flathead screwdriver until the +12V LCD display reads "+12.45".

4.3.6 Adjust PS2-P5- Adjust PS2-P5 with a small flathead screwdriver until the -15V LCD display reads "-15.55".

4.3.7 Adjust PS2-P6- Adjust PS2-P6 with a small flathead screwdriver until the +15V LCD display reads "+15.55".

4.3.8 Turn the PDU Off- Turn the toggle switch PS2 (SW3) to the down ("OFF") position. Unplug the AC power cord from J6.

NOTES:
DIMENSIONS - INCHES

FEDERAL AVIATION ADMINISTRATION
6500 S. MACARTHUR BLVD - BLDG 227
OKLAHOMA CITY, OK 73169

POWER DISTRIBUTION UNIT
TURN ON AND TEST PROCEDURES

DRAWN BY:	SIZE	FSCM NO.	DWG NO.	REV
CFORD 05/26/2008	D		LRR-000067-0025	A
CHECKED BY:	SCALE NONE		SHEET 2 OF 3	

X:\Projects\LRR_ENCODER_REPLACEMENT\JCF\APU\PDU2\dwg\LRR-000067-0025 - TurnOnProcedures.dwg
PLOT DATE: 08/03/2010

REVISIONS				
ZONE	REV	DESCRIPTION	DATE	APPROVED
	-	ORIGINAL DRAWING	05/26/08	

5.1 Test the Output Connectors Continuity- Using a digital multi-meter, test the continuity between the following points as described.

5.1.1 All of these pins/sockets should be shorted together: J2-2, J2-4, J2-6, J2-8, J2-10, J2-12, J2-14, J3-D, J3-K, J7-A, J7-B, J7-C, J7-D, J7-E, J7-L, J8-A, J8-B, J8-C, J8-D, J8-E, J8-L, J9-B, J9-C, J9-F, J9-J, J9-L, J9-P, J9-R, J9-T.

5.1.2 All of these pins/sockets should be shorted together: J2-1, J7-F, J8-F, J9-D, J9-G, J9-M, J9-S, J9-U.

5.1.3 All of these pins/sockets should be shorted together: J2-3, J7-K, J8-K.

5.1.4 All of these pins/sockets should be shorted together: J2-5, J7-H, J8-H.

5.1.5 All of these pins/sockets should be shorted together: J2-7, J3-A, J3-H, J9-A, J9-H, J9-N.

5.1.6 All of these pins/sockets should be shorted together: J2-9, J3-B, J3-J.

5.2 Test the Output Connectors Voltages- Plug power cables into J5 and J6 and turn on SW2 and SW3. Using a digital multi-meter, with J2-2 as the reference point for the negative lead, confirm the following voltages.

5.2.1 J2-1 should have +5.20V on it.

5.2.2 J2-3 should have +15.55V on it.

5.2.3 J2-5 should have -15.55V on it.

5.2.4 J2-7 should have +12.45V on it.

5.2.5 J2-9 should have -12.45V on it.

5.2.6 J2-11 should have +24.3V on it.

5.2.7 J2-13 should have between +11 and +13 volts on it.

6.1 If any of these tests cannot be correctly verified, check the wiring harness and consult the power supply manufacturer if needed.

NOTES:
DIMENSIONS - INCHES

FEDERAL AVIATION ADMINISTRATION
6500 S. MACARTHUR BLVD - BLDG 227
OKLAHOMA CITY, OK 73169

POWER DISTRIBUTION UNIT
TURN ON AND TEST PROCEDURES

DRAWN BY: CFORD 05/26/2008
CHECKED BY:

SIZE	FSCM NO.	DWG NO.	REV
D		LRR-000067-0025	A

SCALE NONE
SHEET 3 OF 3

X:\Projects\LRR_ENCODER_REPLACEMENT\JCF\APU\PDU2\dwg\LRR-000067-0025 - TurnOnProcedures.dwg
PLOT DATE: 08/03/2010

REVISIONS				
ZONE	REV	DESCRIPTION	DATE	APPROVED
	-	ORIGINAL DRAWING	05/26/08	

-Record the PDU Serial #.
PDU Serial #: _____

-Perform these procedures only after all of the wires, cables, and parts have been installed into the PDU, and the alignment and setup procedures have been performed. Plug power cords into J5 and J6 on the back of the PDU. Turn SW2 and SW3 to the 'On' pos

-Put SW1 in the "PS1" position. Record the following values off of the LCD Meters (A3-A8):					
+5V Meter LCD	+12V Meter LCD	-12V Meter LCD	+15V Meter LCD	-15V Meter LCD	+24V Meter LCD

-Using a DMM, measure and record the DC voltage on the following terminal block pins, using A2TB2-10 as the negative (reference) lead:					
A2TB5-1	A2TB3-1	A2TB7-1	A2TB9-1	A2TB11-1	A2TB13-1

-If the measured DC voltages are not within 0.01V of the values read on the LCD meters, follow the manufacturer's instructions for calibrating the LCD meters to accurately reflect the voltage measured. Compare A2TB5-1 to the +5V Meter, A2TB3-1 to the +12V

-Put SW1 in the "PS2" position. Record the following values off of the LCD Meters (A3-A8):					
+5V Meter LCD	+12V Meter LCD	-12V Meter LCD	+15V Meter LCD	-15V Meter LCD	+24V Meter LCD

-Using a DMM, measure and record the DC voltage on the following terminal block pins, using A2TB2-10 as the negative (reference) lead:					
A2TB5-3	A2TB3-3	A2TB7-3	A2TB9-3	A2TB11-3	A2TB13-3

-Put SW1 in the "BUS" position. Record the following values off of the LCD Meters (A3-A8):					
+5V Meter LCD	+12V Meter LCD	-12V Meter LCD	+15V Meter LCD	-15V Meter LCD	+24V Meter LCD

-Using a DMM, measure and record the DC voltage on the following terminal block pins, using A2TB2-10 as the negative (reference) lead:					
A2TB5-5	A2TB3-5	A2TB7-5	A2TB9-5	A2TB11-5	A2TB13-5

NOTES:
DIMENSIONS - INCHES

FEDERAL AVIATION ADMINISTRATION
6500 S. MACARTHUR BLVD - BLDG 227
OKLAHOMA CITY, OK 73169

POWER DISTRIBUTION UNIT
TEST TABLES

DRAWN BY: CFORD 07/14/2008
CHECKED BY:
SIZE D | FSCM NO. | DWG NO. LRR-000067-0026 | REV A
SCALE NONE | SHEET 1 OF 1

C:\Documents and Settings\chris ctr ford\Desktop\pdu latest\dwg\LRR-000067-0026 - TestTables.dwg
PLOT DATE: 02/14/2009