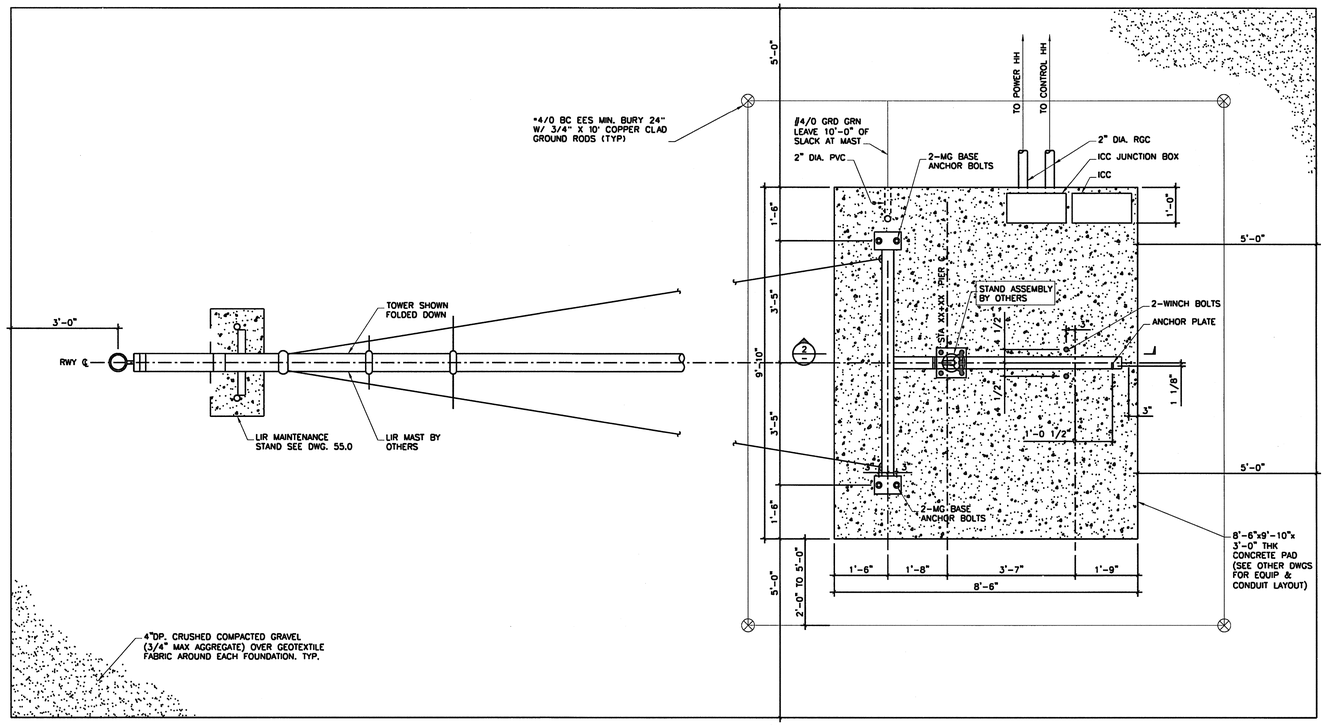

1 — FOUNDATION LAYOUT OF MG-30/40 PLAN VIEW (TYP.)
1/2"=1'-0"

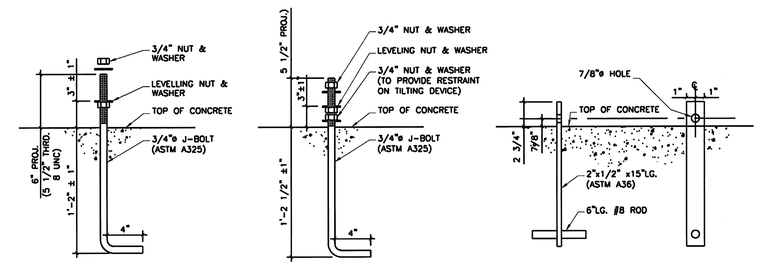

ANCHOR BOLT
1 1/2"=1'-0"

MG-30/40 WINCH BOLTS
1 1/2"=1'-0"

ANCHOR PLATE
1 1/2"=1'-0"

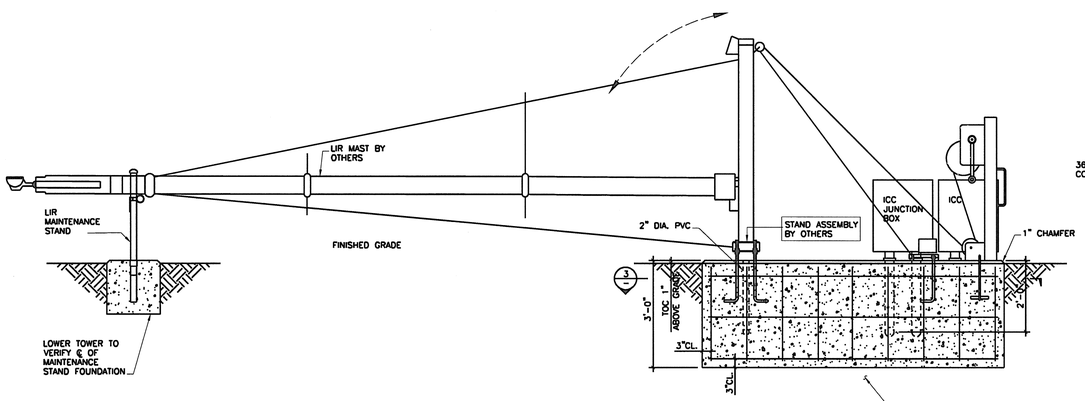

SECTION 2
1/2"=1'-0"

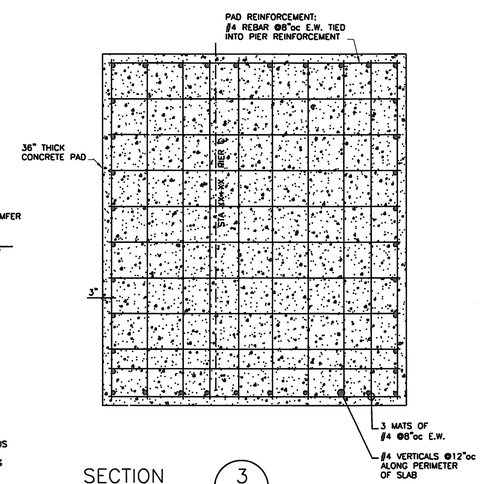

SECTION 3
1/2"=1'-0"

FOR OFFICIAL USE ONLY
PUBLIC AVAILABILITY TO BE DETERMINED UNDER 5 USC 552

REV	APPROVED DATE	DESCRIPTION	JCN	REDLINE DATE	APVD

DEPARTMENT OF TRANSPORTATION
FEDERAL AVIATION ADMINISTRATION
ATO - TECHNICAL OPERATIONS WESTERN SERVICE AREA

MALSR
RWY 08 - NEW MALSR
MG-30/40 FOUNDATION AND LAYOUT

JUNEAU — JUNEAU INTERNATIONAL AIRPORT — AK

REVIEWED BY
SUBMITTED BY — PROJECT ENGINEER
APPROVED BY — MGR: CONSTRUCTION/INSTALLATION
DESIGNED
DRAWN
CHECKED
ISSUED BY ENGINEERING SERVICES NAVAIDS
DATE 11/14/2011 JCN 1004011
DRAWING NO JNU-D-MALSR-C018 REV

ISSUED FOR: CONSTRUCTION

DWG. 56.0-L

jnu-d-malsr-c018.dgn 11/9/2011 8:33:39 AM lori.divona