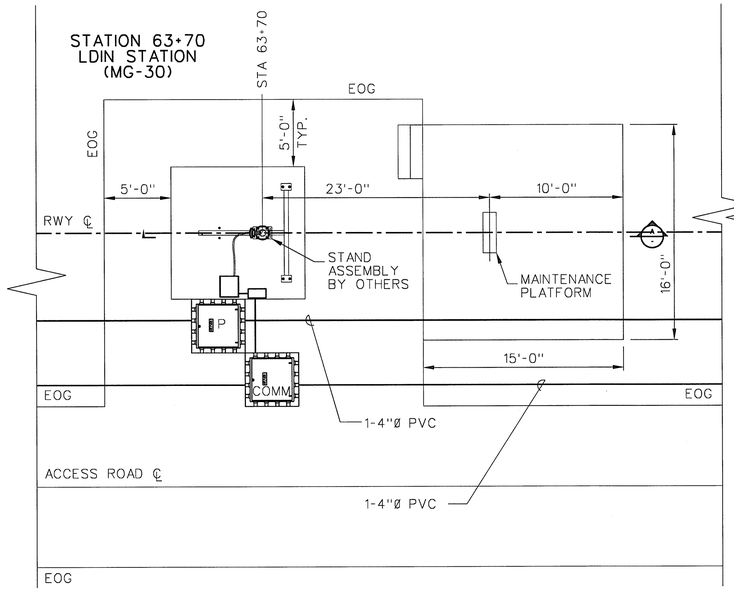

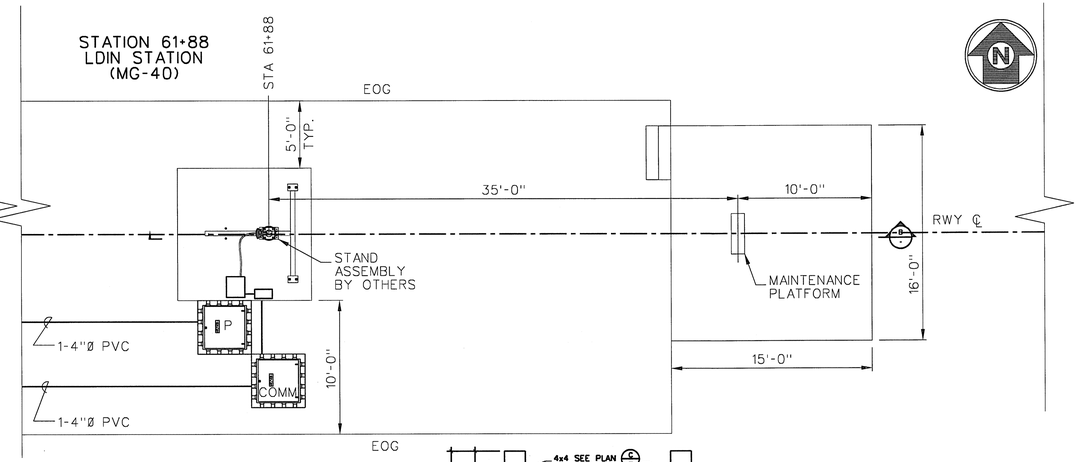

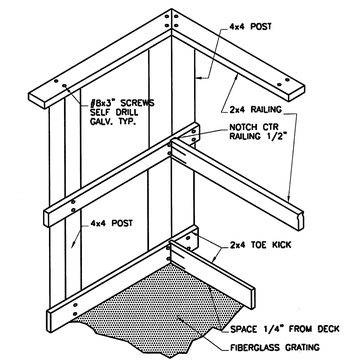

- ALL HARDWARE TO BE HOT-DIPPED GALVANIZED
- ALL LUMBER TO BE PRESSURE TREATED PER AWPA (USE CATEGORY UC3B). SPLIT OR CRACKED LUMBER WILL NOT BE ACCEPTED
- ALL LUMBER D-FIR #2 OR BETTER

H — MAINTENANCE PLATFORM RAILING DETAIL
3/4"=1'-0"

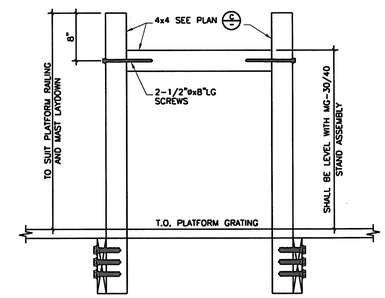

D — SECTION
1"=1'-0"

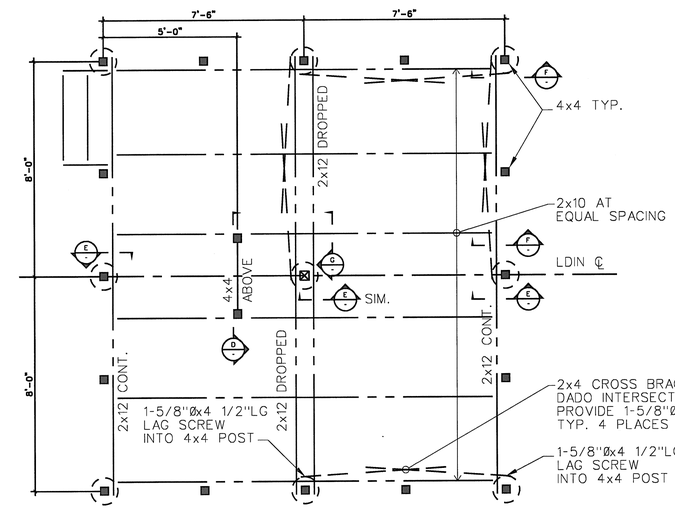

C — MAINTENANCE PLATFORM FRAMING PLAN FOR ENGINEER'S CUT LDIN STA 61+88 AND STA 63+70
3/8"=1'-0"

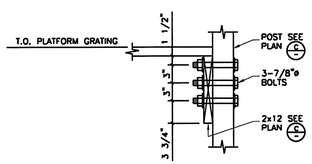

E — SECTION
1"=1'-0"

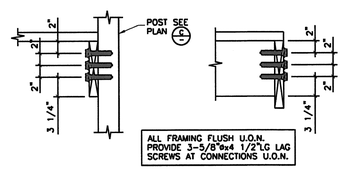

F — MINIMUM FASTENER DISTANCES DETAIL
1"=1'-0"

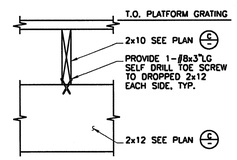

G — SECTION
1"=1'-0"

NOTE A :

1. ALL UNSED CONDUITS WILL HAVE A PULL STRING IN EACH INTERDUCT.
2. MAINTAIN A MIN. 6" SEPARATION BETWEEN POWER AND CONTROL (TYP)
3. MAINTAIN A MIN. 3ft SEPARATION BETWEEN POWER AND CONTROL CONDUITS
4. ALL DUCT BANK UNDER ROADS SHALL BE CONCRETE ENCASED A MIN. OF 4" COVER.

NOTE B :

1. THE EXISTING MALSR SYSTEM SHALL REMAIN OPERATIONAL WHILE THE NEW MALSR IS BEING CONSTRUCTED.
2. THE NEW MALSR SYSTEM WILL BE COMMISSIONED IN SUMMER 2012.
3. ONCE THE NEW MALSR SYSTEM IS COMMISSIONED, THE OLD MALSR SYSTEM SHALL BE COMPLETELY DEMOLISHED AND SITE RESTORED.

NOT IN CONTRACT

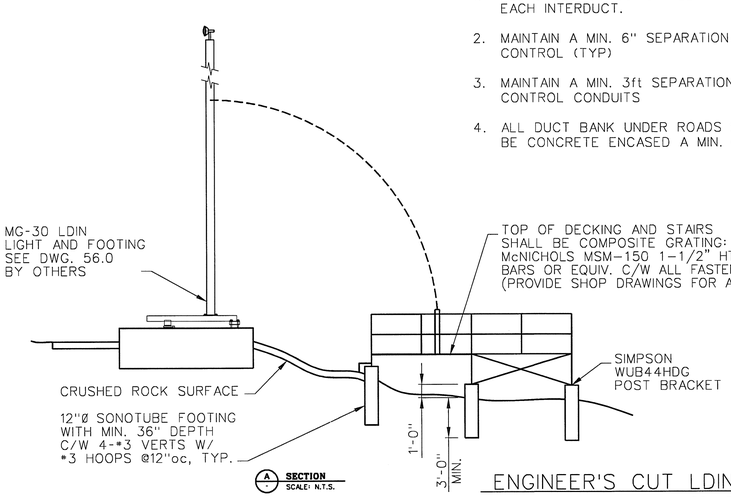

A SECTION
SCALE: N.T.S.

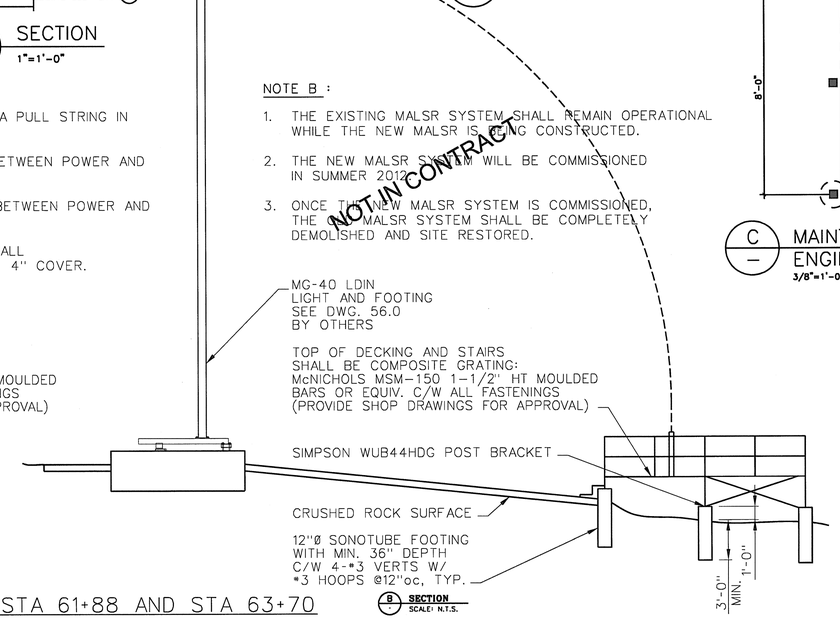

B SECTION
SCALE: N.T.S.

ENGINEER'S CUT LDIN STA 61+88 AND STA 63+70
SCALE: 3/16" = 1'-0"

4' 0 4' 8' 12'
SCALE: 3/16" = 1'-0"

FOR OFFICIAL USE ONLY
PUBLIC AVAILABILITY TO BE DETERMINED UNDER 5 USC 552

REV	APPROVED DATE	DESCRIPTION	JCN	REDLINE DATE	APVD

DEPARTMENT OF TRANSPORTATION
FEDERAL AVIATION ADMINISTRATION
ATO - TECHNICAL OPERATIONS WESTERN SERVICE AREA

LDIN
RWY 08 - ENGINEER'S CUT
REPLACE LDIN
STATION 61+88 TO 63+70 - LAYOUT

JUNEAU — JUNEAU INTERNATIONAL AIRPORT — AK

REVIEWED BY
SUBMITTED BY
APPROVED BY
PROJECT ENGINEER
MGR: CONSTRUCTION/INSTALLATION
DESIGNED
DRAWN
CHECKED
ISSUED BY ENGINEERING SERVICES NAVAIDS
DATE 11/14/2011
JCN 1004011
DRAWING NO JNU-D-LDIN-C204
REV

ISSUED FOR: CONSTRUCTION

jnu-d-ldin-c204.dgn 11/8/2011 3:28:43 PM loridvana

DWG. 43.0-L