REVISIONS				
ZONE	LTR.	DESCRIPTION	DATE	APPROVED
	A	PRELIMINARY RELEASE PER ERF P162	4-10-81	RK
	A	FINAL RELEASE PER ERF F3D	7-26-82	RK

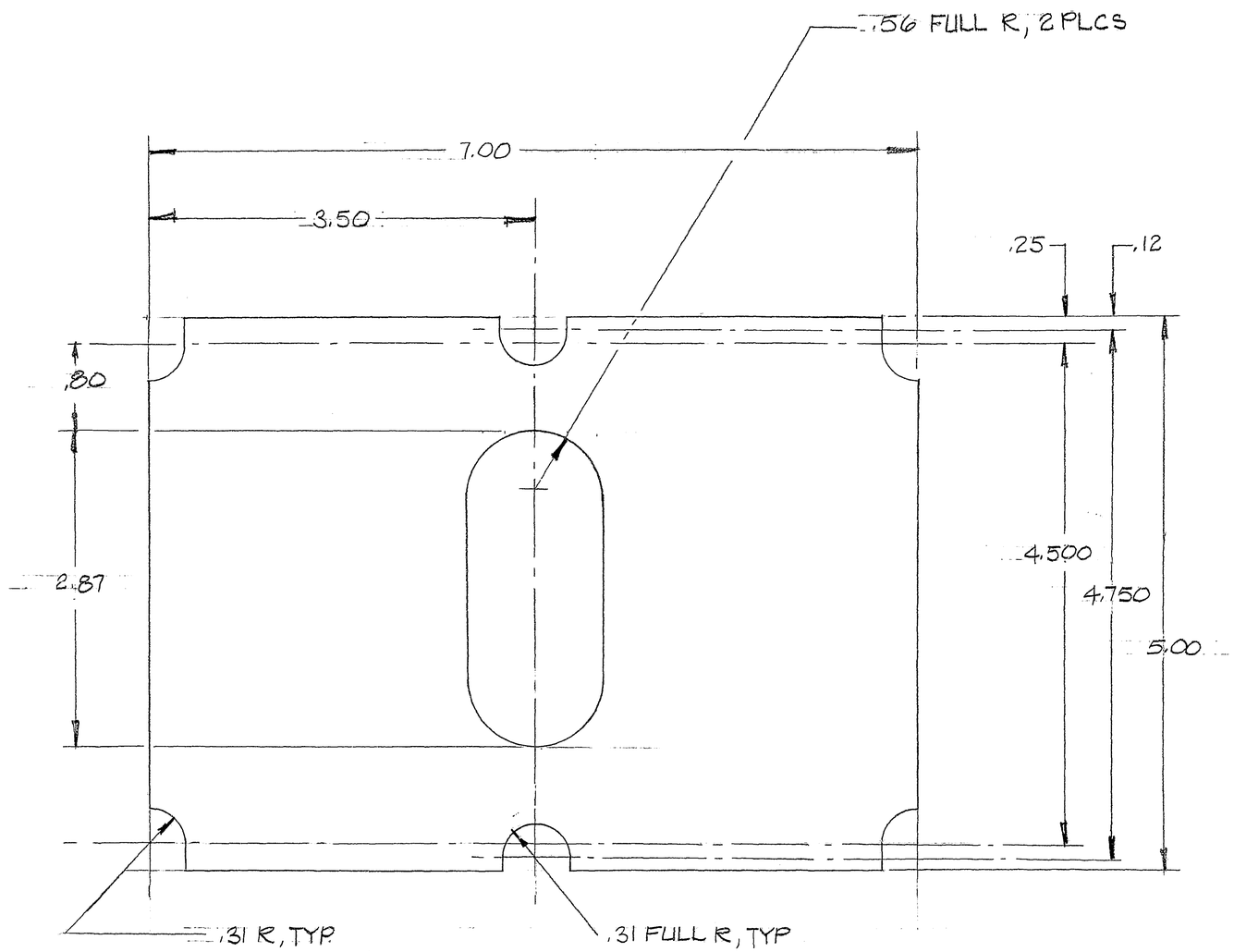

NOTES:

1. MARK PER NR.03.06.02

WILCOX ELECTRIC PART NO.			QUANTITY REQUIRED	ITEM NO.	PART OR IDENTIFYING NO.	NOMENCLATURE OR DESCRIPTION	MATERIAL OR NOTE	SPECIFICATION	CODE IDENT. NO.
				LIST OF MATERIALS OR PARTS LIST					
			YORTAC						
0001	1	119418-0001	098393-0100						
DASH NO.	NO. REQ'D.	NEXT ASSY	USED ON						
		APPLICATION							

ALL DIMENSIONS ARE SHOWN IN INCHES.
ALL DIMENSIONS APPLY AFTER FINISH.
REMOVE ALL BURRS AND SHARP EDGES.

TOLERANCES UNLESS OTHERWISE SPECIFIED

2 DECIMAL .XX	± .02
3 DECIMAL .XXX	± .010
FORMED ANGLE	± 1.0°
HOLE DIAMETERS	± .005
MACH. SURFACES	125 √

DRAWN BY	JLS	3-31-81
DRAFTING APPROVAL	CTS	4/1/81
E. E. APPROVAL	CEM	4/10/81
M. E. APPROVAL	J. Horak	4-10-81
COMP. APPROVAL		
CONF. MGMT.	RKEITH	7-23-82

CONTRACT NO. FA79WA-4317

MATERIAL: WPN A 890308-0001

FINISH: —

APPROVED

APPROVED

WILCOX ELECTRIC, INC. KANSAS CITY, MO. • U.S.A.
A Subsidiary of Northrop Corporation

BOARD, INSULATOR (POWER AMPLIFIER)

SIZE	CODE IDENT. NO.	
C	65597	684211

SCALE 1:1 SHEET 1 OF 1

PART NO. 684211-0001 SHOWN