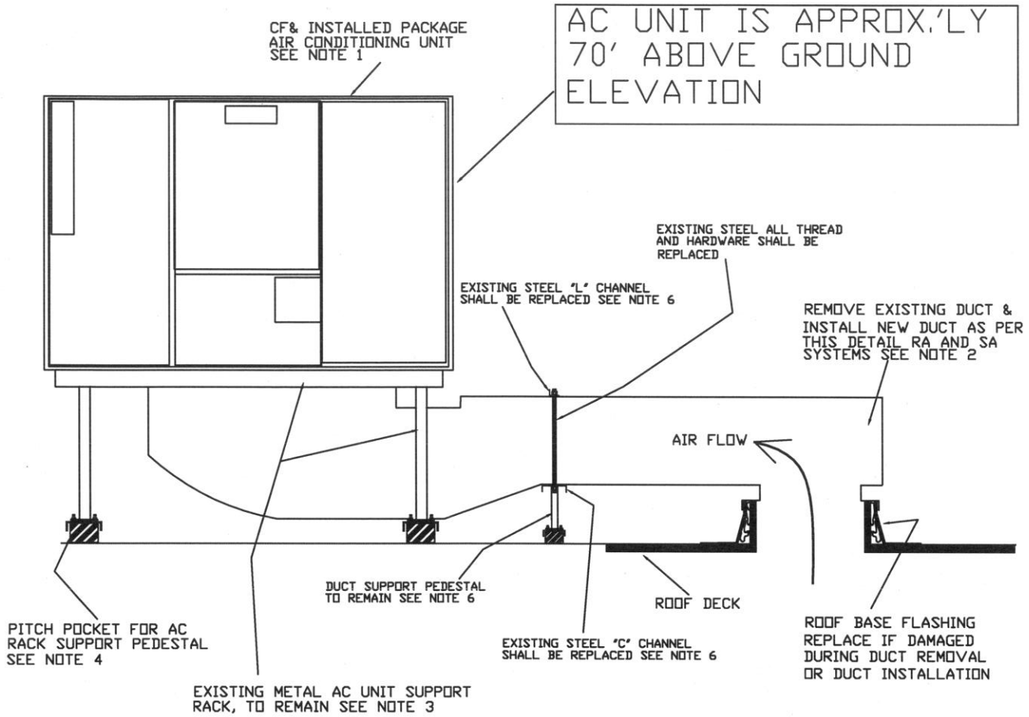

ELEVATION SIDE VIEW (N)

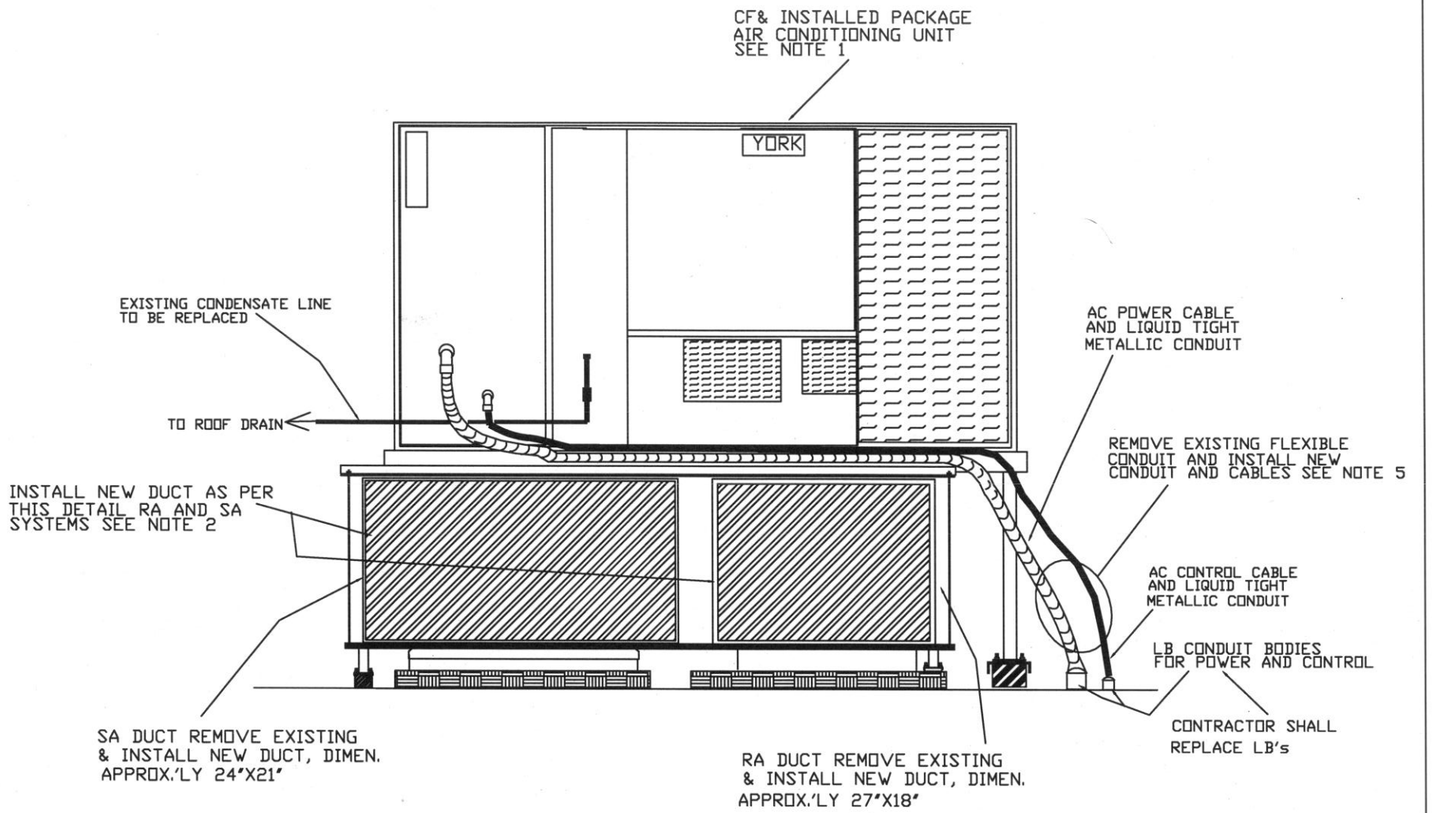

ELEVATION SIDE VIEW (E)

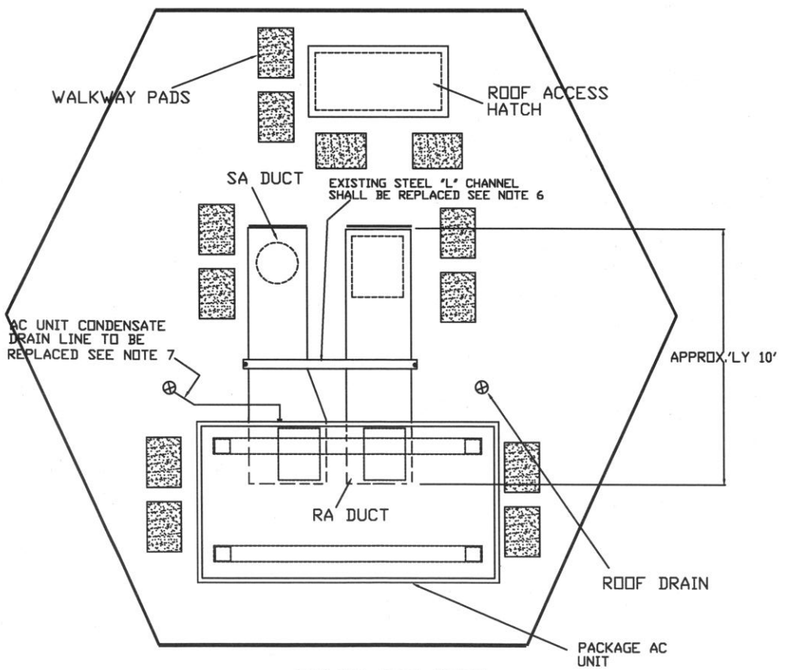

TOWER CAB ROOF PLAN VIEW

NOTES:

CONTRACTOR FURNISHED - CF, GOVERNMENT FURNISHED - GF, RETURN AIR - RA
CONTRACTOR FURNISHED & INSTALLED - CF&I, SUPPLY AIR - SA, AIR CONDITIONING - AC

ALL DIMENSIONS LISTED OR IDENTIFIED ARE APPROXIMATE. IT IS THE CONTRACTOR'S RESPONSIBILITY TO VERIFY UNITS IN THE FIELD PRIOR TO PURCHASING ITEMS OR MATERIALS

1. THE CONTRACTOR SHALL REMOVE AN EXISTING AC PACKAGE UNIT FROM METAL SUPPORT FRAME; AND INSTALL A NEW CF PACKAGE UNIT. THE NEW UNIT HAS THE SAME DIMENSIONS AS THE EXISTING. THE NEW UNIT SHALL BE MANUFACTURED BY YORK AND HAVE MODEL# ZF102C00N2AAA. THE UNIT WILL BE 8.5 TONS, DOWN FLOW, 208 VOLT, 3 PHASE.

NOTE: THE EXISTING UNIT WAS MANUFACTURED BY YORK AND HAS A MODEL# DH102C00D2DTA3. THE EXISTING UNIT IS IDENTICAL TO THE NEW SYSTEM (IF ORDERED BY MODEL# PROVIDED IN NOTE 1)

2. THE CONTRACTOR SHALL REMOVE THE EXISTING SA AND RA DUCT, AND INSTALL NEW SA/RA DUCT IN THE SAME LOCATION AS EXISTING. THE NEW DUCT SHALL HAVE THE SAME DIMENSIONS AS EXISTING AND SHALL BE BE CONSTRUCTED AS OUTLINED ON PROJECT DRAWINGS. AND IN THE SPECIFICATIONS.

3. AFTER REMOVING EXISTING AC PACKAGE UNIT, THE CONTRACTOR SHALL REFURBISH THE UNIT'S METAL RACK. REFURBISHMENT SHALL CONSIST OF THE FOLLOWING: A.) CLEAN ALL RACK METAL SURFACES BY REMOVING RUST, SCALE, GREASE, DIRT, ETC. SEE PROJECT SPECIFICATIONS FOR ADDITIONAL INFORMATION ON METAL SURFACE PREPARATION. THE CONTRACTOR SHALL THEN PAINT METAL RACK USING MATERIALS AND METHODS OUTLINED IN SPECIFICATIONS.

4. THE CONTRACTOR SHALL REPAIR IF REQUIRED ALL AC RACK PITCH POCKETS. TO ENSURE THAT THEY WILL NOT LEAK.

5. THE CONTRACTOR SHALL REPLACE THE CONDUIT FOR BOTH CONTROL AND POWER CABLES. THE CONTRACTOR SHALL REPLACE THE AC THERMOSTAT (CONTROL) CABLES. THE EXISTING POWER CABLES SHALL REMAIN IN PLACE FOR REUSE W/ NEW AC UNIT. THE CONTRACTOR SHALL ALSO REPLACE EXISTING LB CONDUIT BODIES FOR BOTH POWER AND CONTROL CIRCUITS.

6. THE CONTRACTOR SHALL REUSE THE DUCT SUPPORT PEDESTAL; HOWEVER THE REMAINING DUCT SUPPORT COMPONENTS SHALL REPLACED. COMPONENTS TO BE REPLACED ARE: a.) STEEL "C" CHANNEL BEAM b.) STEEL "L" BEAM c.) STEEL ALL THREAD AND ASSOCIATED NUTS AND WASHERS. THE NEW CF REPLACEMENT BEAMS SHALL BE HOT DIPPED AND ALL HARDWARE SHALL BE STAINLESS STEEL.

7. THE CONTRACTOR SHALL REPLACE THE AC CONDENSATE UNIT DRAIN LINE. THE NEW LINE SHALL BE PVC AND SHALL BE ROUTED TO THE ROOF DRAIN.

HOUMA TOWER CAB HVAC REPLACEMENT PROJECT

SUBMITTED:	APPROVED:
KENNETH GRAVES	
TEC. SUPPORT STAFF - 9/10/12	DWG# - HUMATCT-HVAC-01

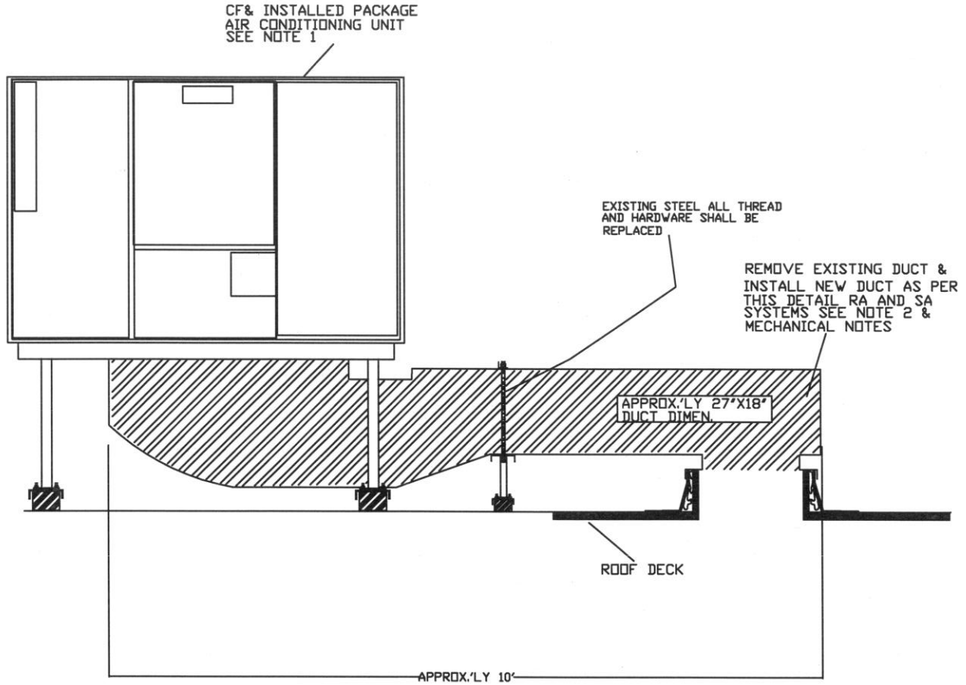

ELEVATION SIDE VIEW (N)

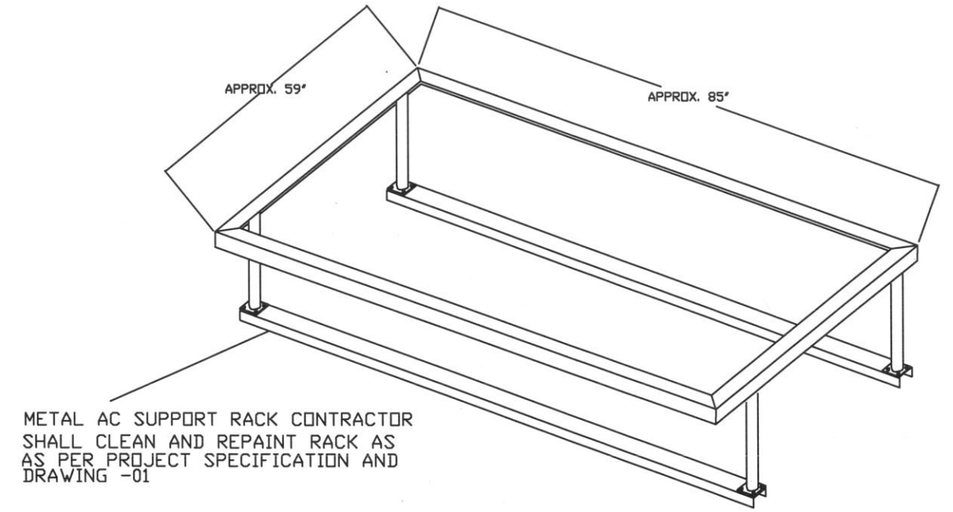

DIMENSIONAL VIEW OF
AC SUPPORT RACK

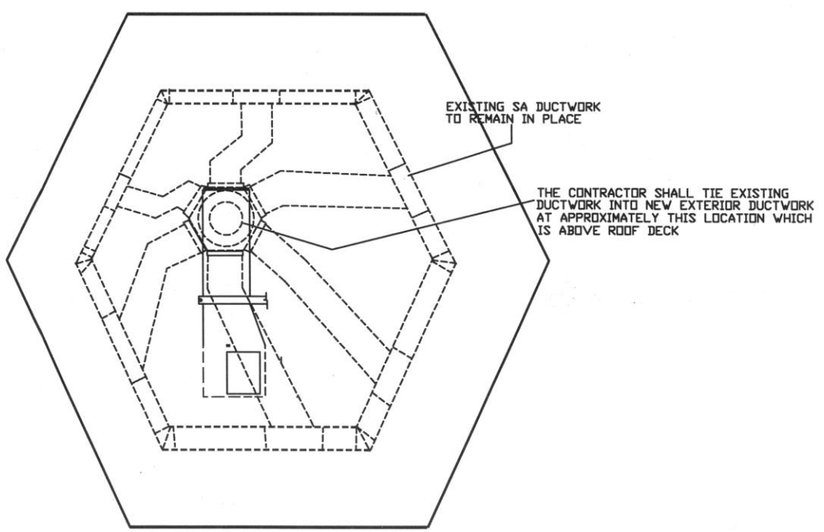

TOWER CAB DUCTWORK
PLAN VIEW

NOTES:

CONTRACTOR FURNISHED - CF, GOVERNMENT FURNISHED - GF, RETURN AIR - RA
CONTRACTOR FURNISHED & INSTALLED - CF&I, SUPPLY AIR - SA, AIR CONDITIONING - AC

ALL DIMENSIONS LISTED OR IDENTIFIED ARE APPROXIMATE. IT IS THE CONTRACTOR'S RESPONSIBILITY TO VERIFY UNITS IN THE FIELD PRIOR TO PURCHASING ITEMS OR MATERIALS

1. THE CONTRACTOR SHALL REMOVE AN EXISTING AC PACKAGE UNIT FROM METAL SUPPORT FRAME; AND INSTALL A NEW CF PACKAGE UNIT. THE NEW UNIT HAS THE SAME DIMENSIONS AS THE EXISTING. THE NEW UNIT SHALL BE MANUFACTURED BY YORK AND HAVE MODEL# ZF102C00N2AAA. THE UNIT WILL BE 8.5 TONS, DOWN FLOW, 208 VOLT, 3 PHASE.

NOTE: THE EXISTING UNIT WAS MANUFACTURED BY YORK AND HAS A MODEL# DH102C00D2DTA3. THE EXISTING UNIT IS IDENTICAL TO THE NEW SYSTEM (IF ORDERED BY MODEL# PROVIDED IN NOTE 1)

2. THE CONTRACTOR SHALL REMOVE THE EXISTING SA AND RA DUCT, AND INSTALL NEW SA/RA DUCT IN THE SAME LOCATION AS EXISTING. THE NEW DUCT SHALL HAVE THE SAME DIMENSIONS AS EXISTING AND SHALL BE BE CONSTRUCTED AS OUTLINED ON PROJECT DRAWINGS. AND IN THE SPECIFICATIONS.

MECHANICAL NOTES

1A. CONSTRUCT ALL DUCTS WITH GALVANIZED STEEL IN ACCORDANCE WITH THE "SMACNA" DUCT CONSTRUCTION STANDARDS". ALL DUCT WORK SHALL BE INSTALLED AS PER THESE SAME STANDARDS.

2A. DUCT DIMENSIONS SHOWN ON DWGs ARE OUTSIDE SHEET METAL UNITS. ALSO THE DIMENSIONS ARE APPROXIMATE. SINCE CF&I DUCT WORK SHALL HAVE THE SAME DIMENSIONS AS EXISTING IT SHALL BE THE CONTRACTORS RESPONSIBILITY TO OBTAIN ALL MEASUREMENTS PRIOR TO DUCTWORK FABRICATION.

3A. REINFORCED DUCT AND SEAL PER SMACNA FOR 2" WATER GAGE PRESSURE CLASSIFICATION AND SEAL CLASSIFICATION C.

4A. ANY DUCT ELBOWS SHALL HAVE DOUBLE WALL TURNING VANES.

5A. EXTERIOR DUCT WORK SHALL BE CONSTRUCTED TO WITHSTAND A SALTWATER COASTAL ENVIRONMENT AND WIND FORCES OF 120 MPH.

5A. CONDENSATE DRAIN PIPING TO BE PVC MATERIAL.

6A. ALL HARDWARE SHALL BE STAINLESS STEEL.

HVAC CONTROLS OPERATION

NOTE: AS INDICATED ON DWG-01, THE CONTRACTOR SHALL REPLACE EXISTING AC THERMOSTAT FLEXIBLE CONDUIT. THE CONTRACTOR SHALL ALSO REPLACE ALL THERMOSTAT CONTROL WIRE. THE NEW WIRE SHALL RUN FROM AN EXISTING THERMOSTAT TO THE NEWLY INSTALLED AC UNIT.
NOTE: THE EXISTING T-STAT SHALL BE REPLACED WITH A NEW CF THERMOSTAT.

1B. THE CONTRACTOR SHALL PROVIDE NEW DIGITAL THERMOSTAT FOR CONTROL OF NEW AC UNIT.

HOUMA TOWER CAB HVAC
REPLACEMENT PROJECT

SUBMITTED: KENNETH GRAVES	APPROVED:
TEC. SUPPORT STAFF - 9/10/12	DWG# - HUMATCT-HVAC-02