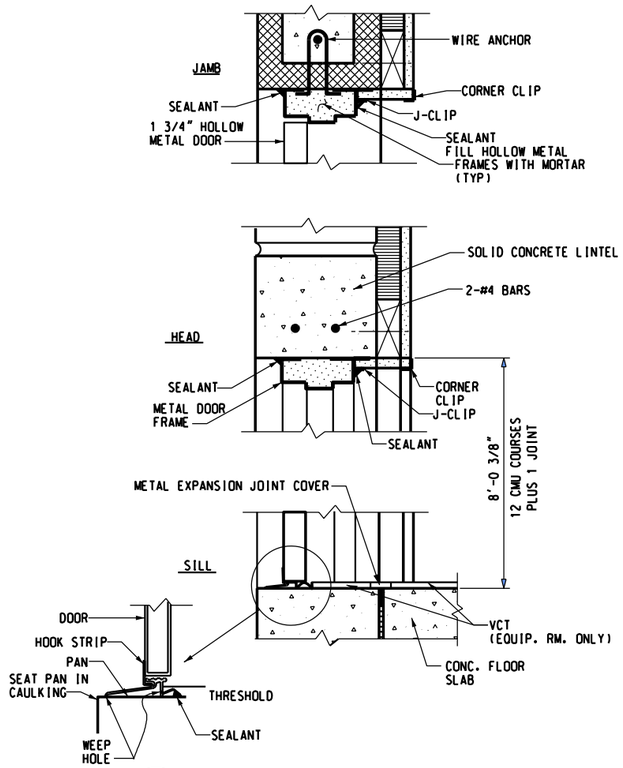

A A004 SECTION THROUGH DOOR
NOT TO SCALE

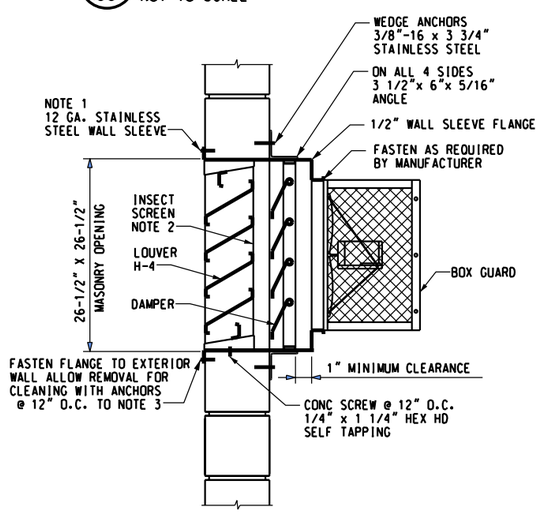

D A004 ENGINE GENERATOR ROOM WALL MOUNTED EXHAUST FAN EF-1 WITH DAMPER D-3
NOT TO SCALE

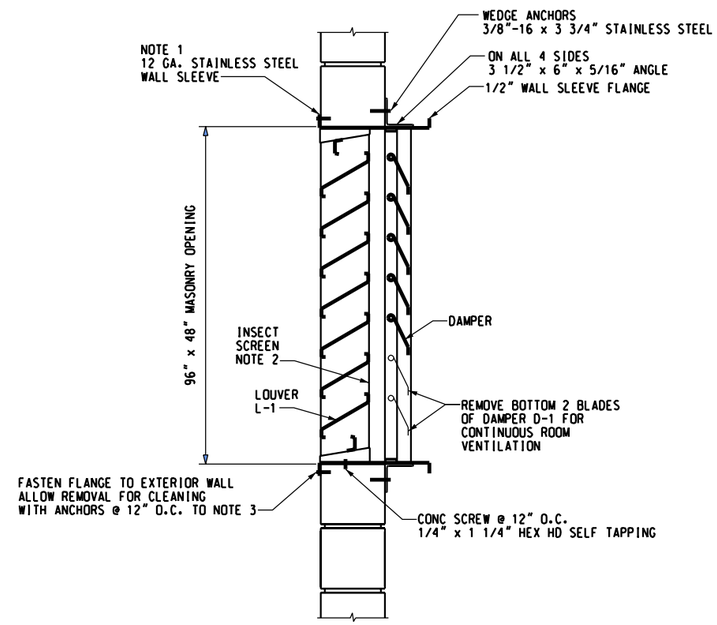

B A004 ENGINE GENERATOR ROOM INTAKE DAMPER D-1
NOT TO SCALE

NOTES

1. WIDTH OF WALL SLEEVE DETERMINED BY ACTUAL EQUIPMENT FURNISHED AND MINIMUM CLEARANCES. SHELL TYPE #304 STAINLESS STEEL DROP-IN EXPANSION BINDING HEAD SLOTTED MACHINE SCREWS.
2. INSECT SCREENING SHALL BE 18 GAUGE, NO. 18 MESH STAINLESS STEEL.
3. FASTEN LOUVER TO MASONARY WALL BY USING 1/4" FLUSH OR ANCHORS WITH TYPE 18-8 STAINLESS STEEL #1/4"-20 X 1/2".

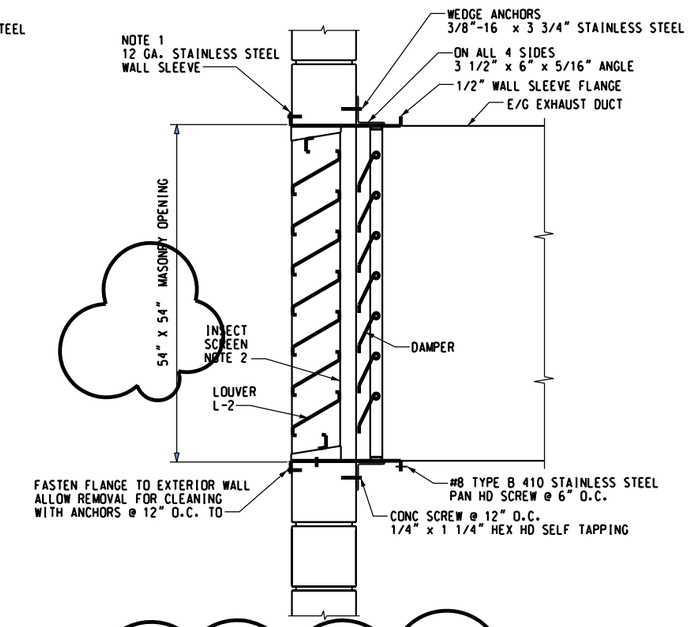

C A004 ENGINE GENERATOR ROOM GRAVITY EXHAUST DAMPER D-2
NOT TO SCALE

REV	APPROVED DATE	DESCRIPTION	JCN	REDLINE DATE	APVD
A	2/24/12	ENG'R REV. EXH DAMPER SIZE	NB		

DEPARTMENT OF TRANSPORTATION
FEDERAL AVIATION ADMINISTRATION
ATO - TECHNICAL OPERATIONS EASTERN SERVICE AREA

ASR

CONCRETE MASONRY UNIT (CMU) BUILDING DOOR AND HOOD DETAILS

FT LAUDERDALE FORT LAUDERDALE/HOLLYWOOD INTL AIRPORT FL

REVIEWED BY
SUBMITTED BY DO NOT SIGN
APPROVED BY DO NOT SIGN
PROJECT ENGINEER
MGR SURV/WEATHER ENGR CTR
DESIGNED NB
DRAWN
CHECKED
ISSUED BY ENGINEERING SERVICES SURV/WEATHER
DATE 12/16/2010 JCN 722788
DRAWING NO FLL-D-ASR-A004 REV A

HARTRAMPF

ISSUED FOR: CONSTRUCTION
1589212775

EDMS FLL-D-ASR-A004DGN

THIS DRAWING PRODUCED ON ASO REGION MICROSTATION SYSTEM