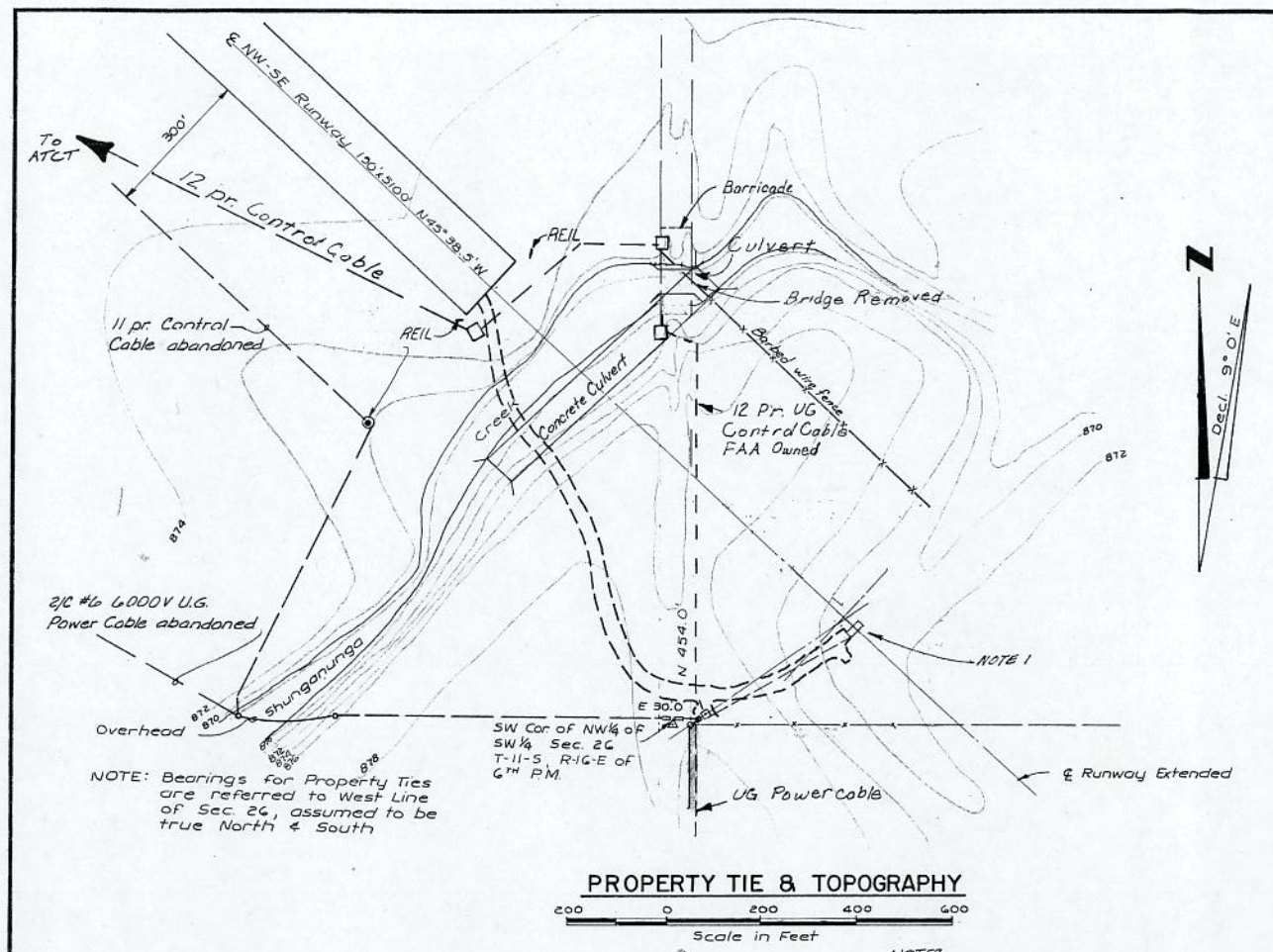

PROPERTY TIE & TOPOGRAPHY

200 0 200 400 600
Scale in Feet

NOTES

1. 8 ELEMENT V-RING LOCALIZER ARRAY PER DWG. CE-D-6600-21-6. FOUNDATION. ARE 7'-0" DEEP
2. 20' x 60' x 4" DEEP CRUSHED ROCK WALK AREA AROUND ALTERNATE ARRAY.
3. 2-RG 333 A/U COAXIAL CABLES & 1-12 PR. #19 ARMORED CONTROL CABLE MIN. 36" DEEP, & 1" PVC SCH. 40 TYPE II CONDUIT W/4-#10 TYPE USE WIRES & #6 BARE GND WIRE MIN. 24" DEEP.
4. CABLE INTO LOCALIZER BLDG. PER DWG. CE-D-2530-3-1
5. REDUCER PIECES TO TRANSITION 1" PVC CONDUIT TO 2" RIGID CONDUIT AT LOCALIZER ARRAY.

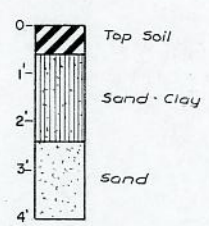

BORING LOG

No Water Encountered
Nov. 19, 1947

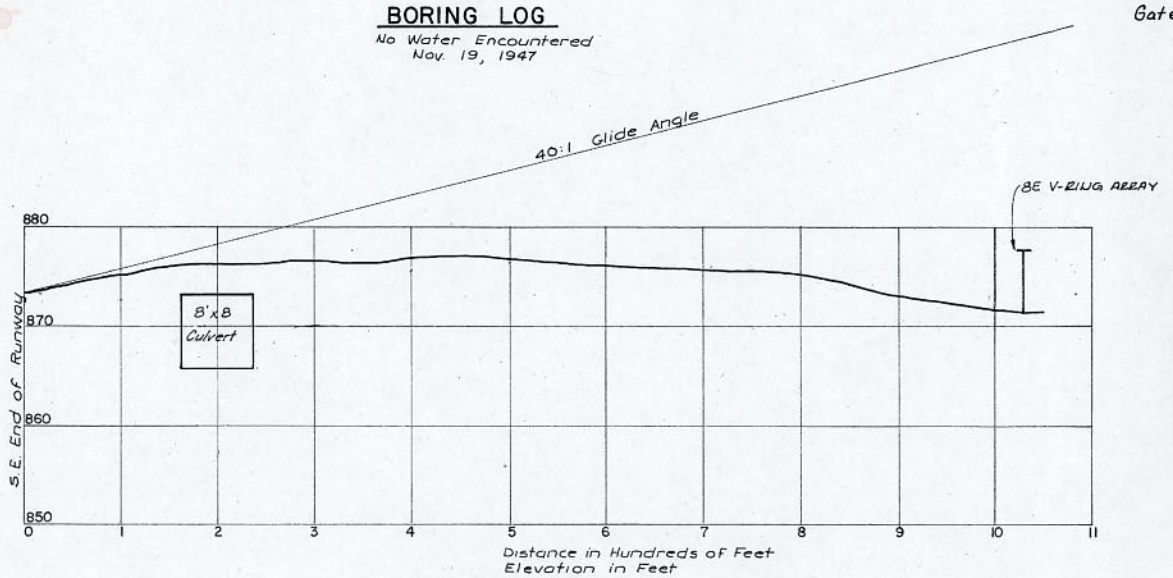

PROFILE - RUNWAY TO LOCALIZER

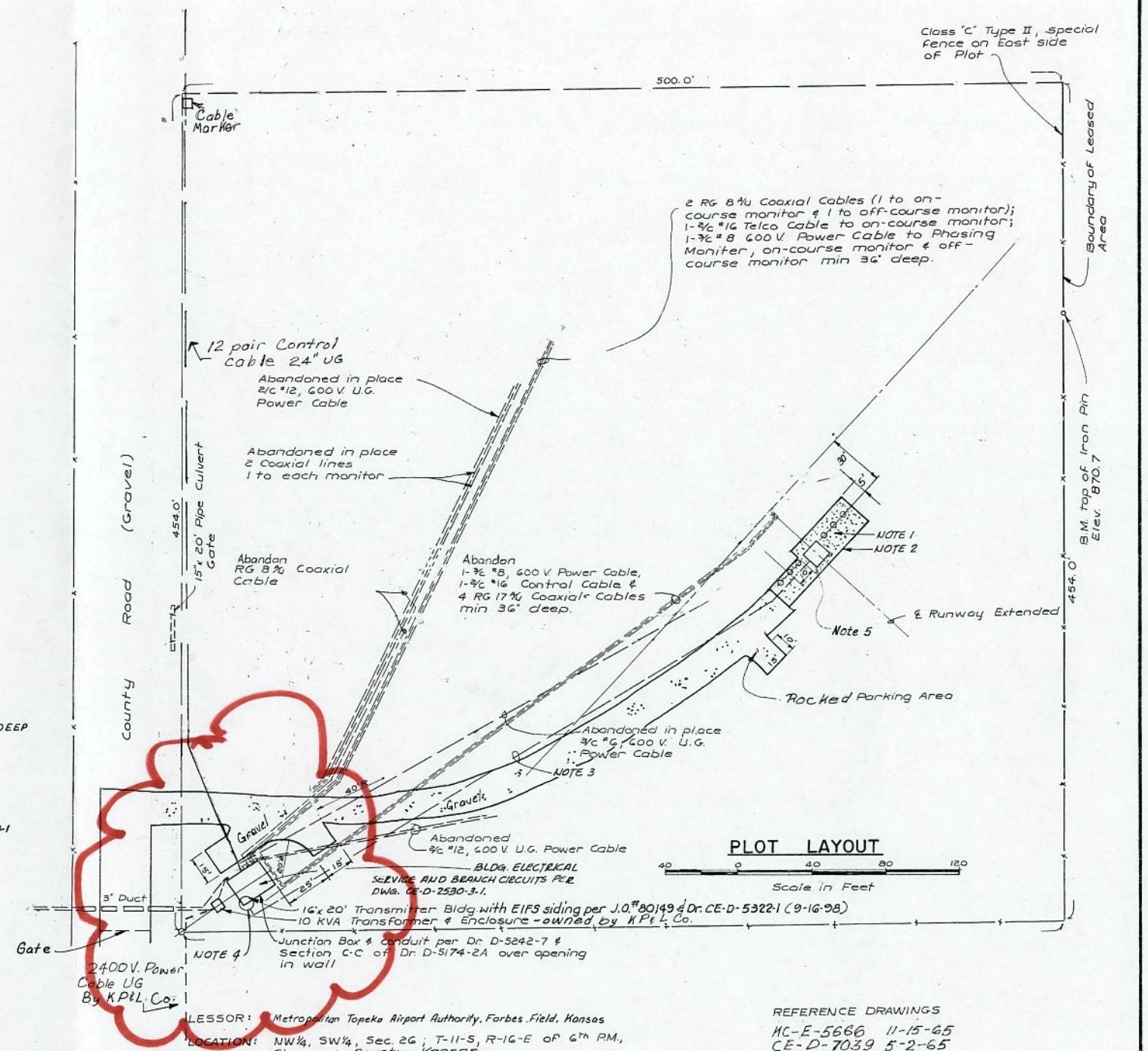

PLOT LAYOUT

40 0 40 80 120
Scale in Feet

LESSOR: Metropolitan Topeka Airport Authority, Forbes Field, Kansas

LOCATION: NW¼, SW¼, Sec. 26, T-11-S, R-16-E of 6th P.M., Shawnee County, Kansas.

AREA: 5.74 Acres

ELEVATION: 872 Feet

LATITUDE: 39° 03.6'

LONGITUDE: 95° 36.8'

POWER: Kansas Power & Light Co., Topeka Kansas
D.W. Whitaker, Division Engineer
A.C. 2300 V, 60 cycle 1 phase service

REFERENCE DRAWINGS

KC-E-5666	11-15-65
CE-D-7039	5-2-65
CE-D-6600-21-6	4-30-84
CE-D-6600-21-7	4-30-84
CE-D-6600-21-8	4-30-84
CE-D-7371	6-17-77
CE-D-2530-3-1	
D-1702-26	4-22-46

DIRECTIONS TO SITE: Site is located 1000' SE of SE end of NW-SE Runway.

NO.	REVISION	DATE	CK'D.
7	As Built EIFS siding per J.O.#80149 (9-16-98)	10-6-98	MKJ
6	As Built (01-19-90) (AF-SFO)		JLB
4	ADD 8E V-RING ARRAY (33433)	7-20-84	
3	AS BUILT UG Power Cable By KP&L Co. (8-19-80)	5-15-80	
2	Replaced Control Cable (4-11-77)	5-15-80	
5	As Built	8-28-85	

FEDERAL AVIATION AGENCY
AVIATION FACILITIES SERVICE, CENTRAL REGION
KANSAS CITY, MISSOURI

LOCALIZER
INSTRUMENT LANDING SYSTEM
TOPEKA, KANSAS 3842K

APPROVED: SUBMITTED BY: George C. Reuter
CK'D. BY: MCJ ENG. BY: MCJ
DR. BY: RUMPELTES DATE: 4-19-62
DR. KC-D-2530-3B

ICT-TOP-LOC A

(CENTIMETERS)

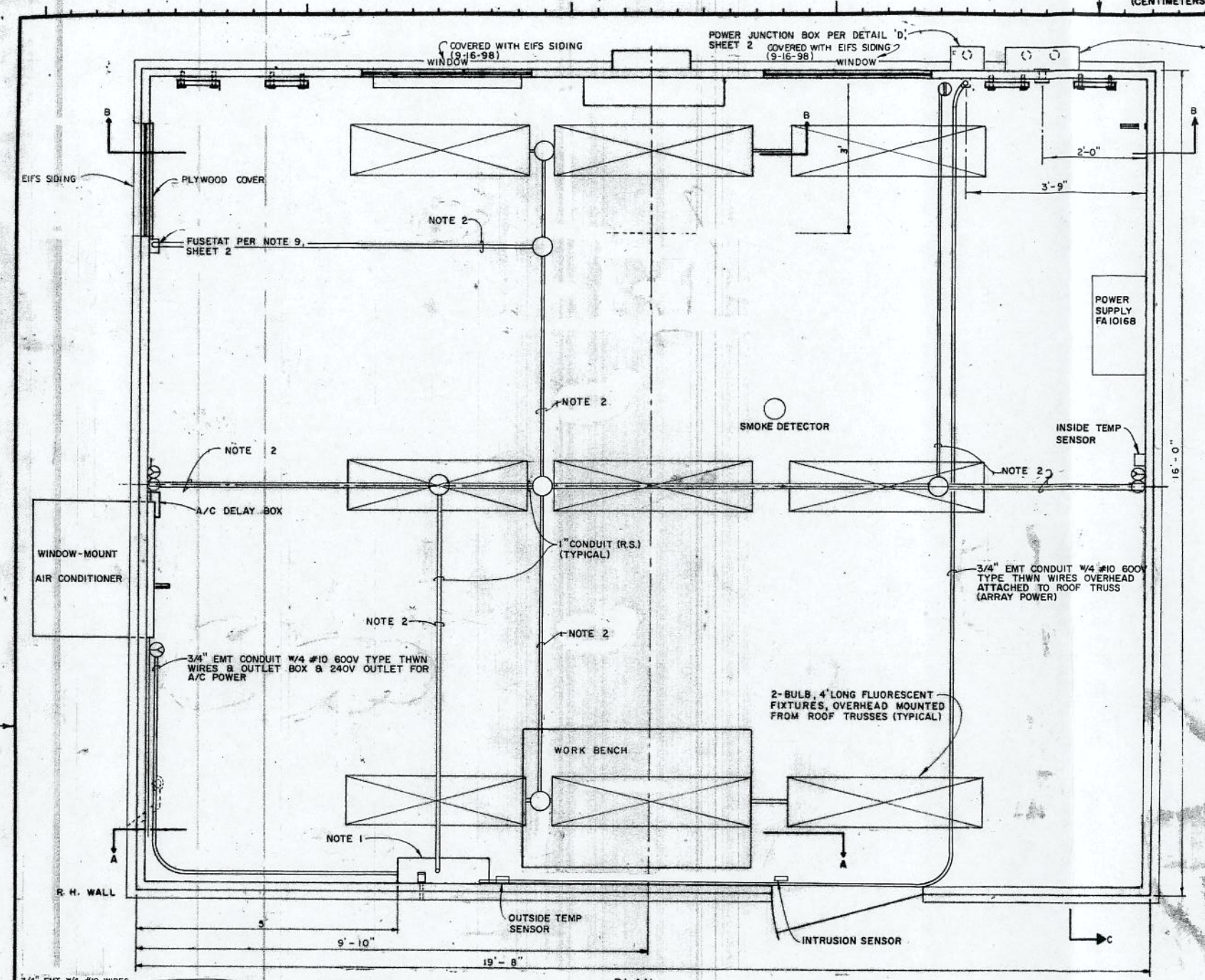

PLAN
SCALE: 3/4" = 1'-0"

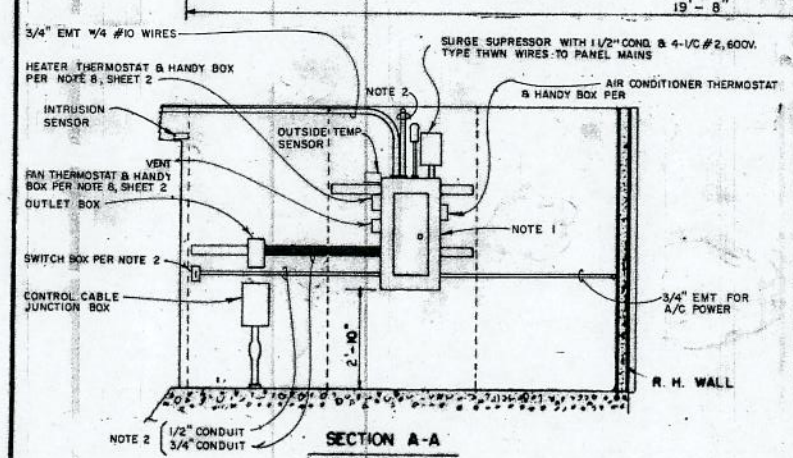

SECTION A-A
SCALE: 3/8" = 1'-0"

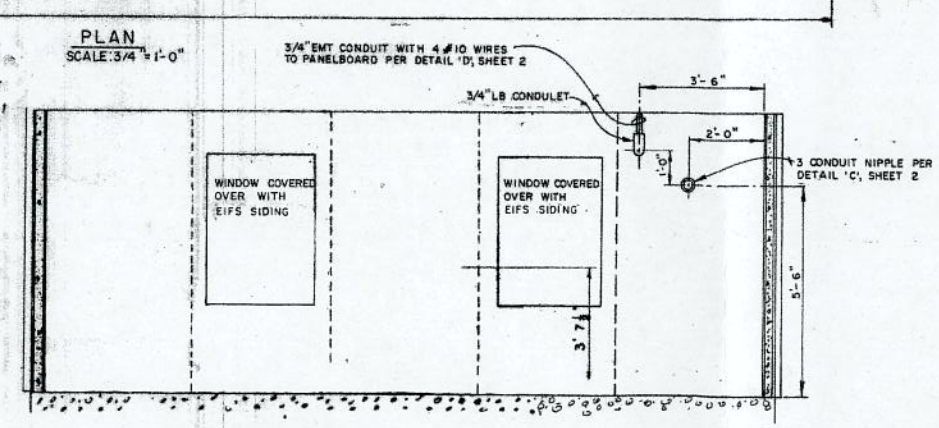

SECTION B-B
SCALE: 3/8" = 1'-0"

NOTES

1. GFM FURNISHED SQUARE 'D' CAT. # NQOB-30-3ABIOOS, -SPL PANELBOARD INTERIOR WITH CIRCUIT BREAKERS SQUARE 'D' CAT. # PK23GTAL GROUND BAR KIT, OR EQUAL.

2. WIRING TO BUILDING LIGHTS, CONV. OUTLETS, A/C UNIT, VENT FAN & HEATER RECEPT. ALL WIRING IS 600V. TYPE THWN WIRES WITH GREEN GROUND WIRE INCLUDED. USED # 12 WIRE FOR 120V. CIRCUITS & #10 WIRE FOR 240V. CIRCUITS.

LEGEND

Ⓥ 240V. OUTLET - 24" AFF

◐ 120V. OUTLET - 36" AFF

REV.	DATE	DESCRIPTION		APPROVED
5	10-6-98	AS BUILT EIFS SIDING (9-16-98)	80149	TMJ
4	4-29-94	AS BUILT - ADDED SENSORS		TMJ
3	2-14-90	AS BUILT (01-19-90) (AF-SFO)		JLB
2	8-28-85	AS BUILT 5-1-85		[illegible]
1	7-20-84	INSTALL NEW S.S. & ELEC. EQUIP.	33433	[illegible]
			33433	

DEPARTMENT OF TRANSPORTATION
FEDERAL AVIATION ADMINISTRATION
CENTRAL REGION-KANSAS CITY, MISSOURI

ELECTRICAL LAYOUT & DETAILS
LOCALIZER SHELTER - RUNWAY 13
PHILLIP BILLARD MUNICIPAL AIRPORT
TOPEKA, KANSAS

3842K

REVIEWED BY: RB 453 / MW 453
SUBMITTED BY: John Scott Sweetnam
APPROVED BY: William J. Barnberg
DESIGNED BY / DRAWN BY / CHECKED BY
ISSUED BY: AIRWAY FACILITIES DIVISION, ENGINEERING BRANCH
DATE: 7-20-84
DRAWING NO. CE-D-2530-3-1
ICT TOP LOC C

SHEET 1 OF 2

(INCHES)

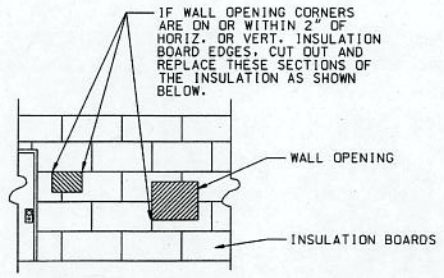

INSULATION LAYOUT

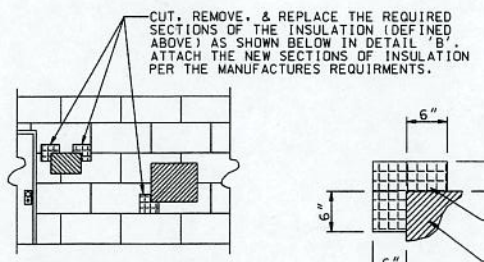

CORNER INSERTS

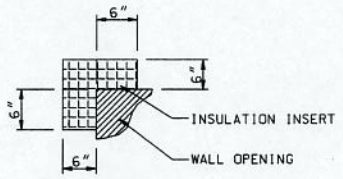

DETAIL 'B'

WALL OPENING CORNER DETAILS

NOT TO SCALE

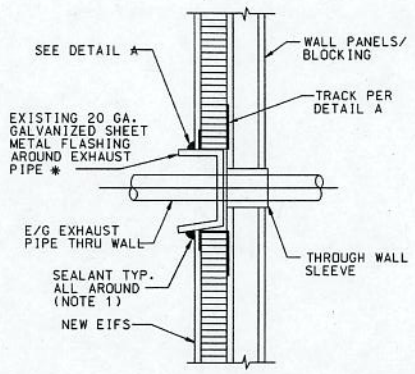

* IF FLASHING DOES NOT EXIST, PROVIDE 3" CLEARANCE AROUND PIPE.

E/G EXHAUST PIPE DETAIL

NOT TO SCALE

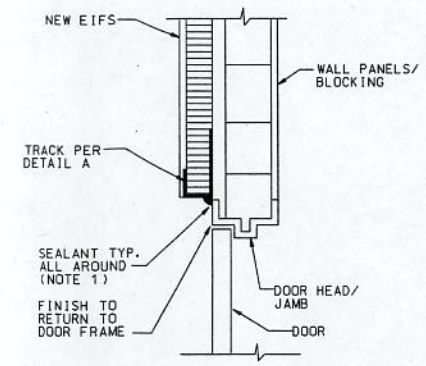

TYPICAL DOOR HEAD DETAIL
JAMB DETAIL IS SIMILAR

NOT TO SCALE

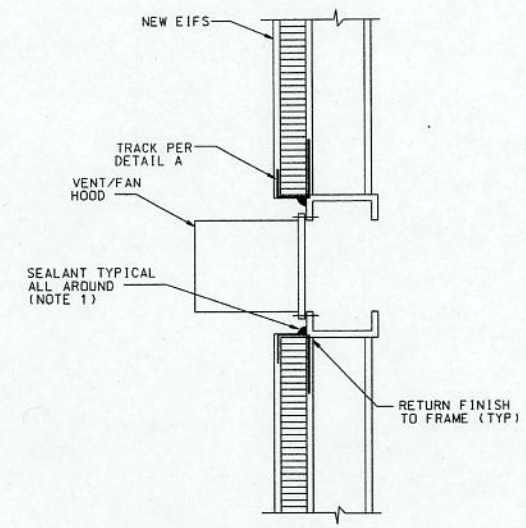

MASONRY OPENING DETAIL

NOT TO SCALE

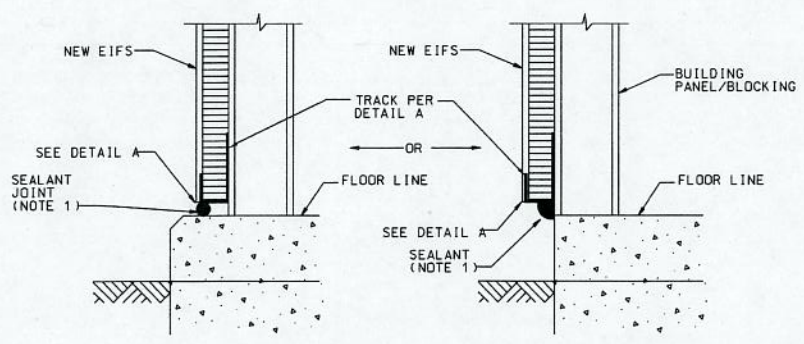

DETAIL AT WALL BASE

NOT TO SCALE

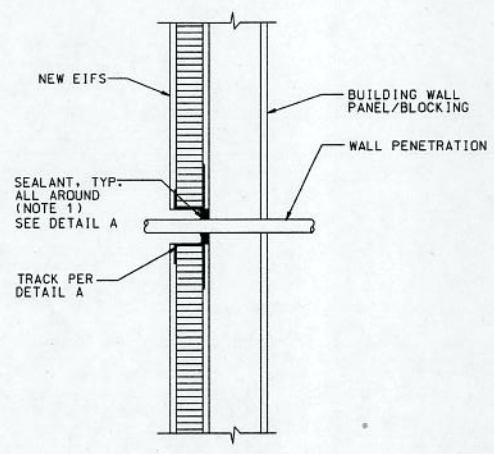

WALL PENETRATION DETAIL

NOT TO SCALE

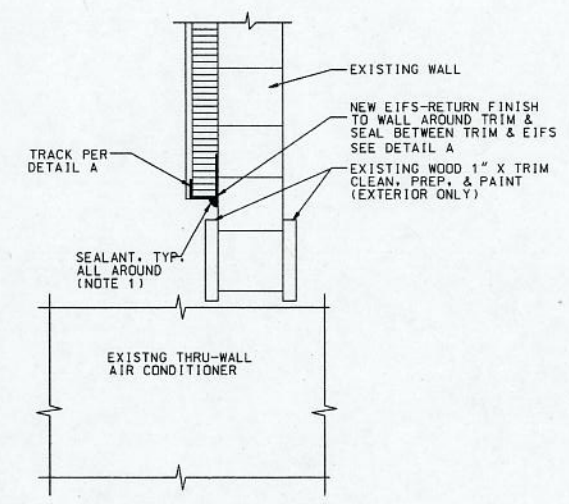

NOTE: JAMB, HEAD, & SILL SIMILAR

A/C OPENING DETAILS

NOT TO SCALE

GENERAL NOTES:

1. JOINTS: ALL JOINTS OF EIFS EDGES SHALL BE SEALED WITH AN APPROVED CAULK (DOW CORNING #790 OR EQUAL AS APPROVED BY THE EIFS MANUFACTURER).

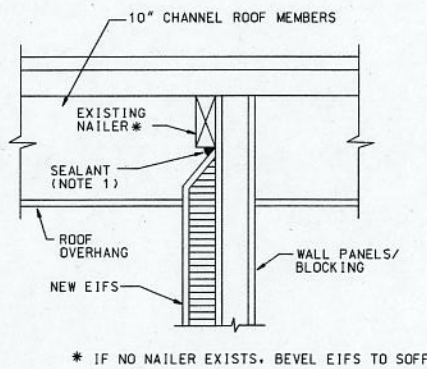

* IF NO NAILER EXISTS, BEVEL EIFS TO SOFFIT

TYPICAL SIDING DETAIL
AT TOP OF WALLS w/ REMOVABLE SOFFIT

NOT TO SCALE

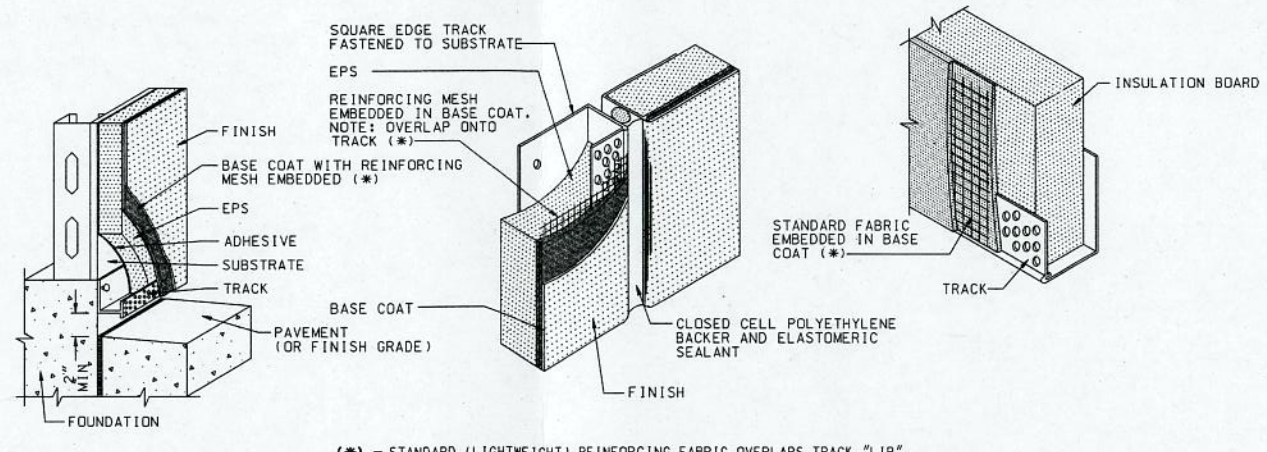

(*) - STANDARD (LIGHTWEIGHT) REINFORCING FABRIC OVERLAPS TRACK "LIP"
IMPACT (HEAVYWIEGHT) REINFORCING FABRIC BUTTS AGAINST TRACK "LIP" EDGE

DETAIL A

NOT TO SCALE

REV.	DATE	DESCRIPTION	JOB ORDER NUMBER	APPROVED
5	8-9-05	REGIONAL STANDARD		TMJ
4	12/18/00	REVISED DETAILS		JMG
3	7/10/97	ADDED DETAILS		ABL
2	5/28/96	MINOR CORRECTIONS		JMG
1	3/1/96	ADDED DETAILS		JMG

DEPARTMENT OF TRANSPORTATION
FEDERAL AVIATION ADMINISTRATION
KCNASIC - KANSAS CITY, MISSOURI

EXTERIOR INSULATION & FINISH SYSTEM (EIFS) SIDING TYPICAL INSTALLATION DETAILS

COORDINATED WITH

CAEG FILE ORIGINATED BY: PK BAILEY

CHECKED BY:

ISSUED BY
KCNASIC
901 LOCUST
KANSAS CITY, MISSOURI
64106

ALPHA TYPE	LOCATION	AF/REMOTE	AF/CONTROL	R/CCC
–	–	–	–	–

SUBMITTED BY: Timothy Johnson
ORIGINAL SIGNED BY: Timothy Johnson
APPROVED BY: James L. Besel
ORIGINAL SIGNED BY: JAMES L. BESEL
MASTER USED:
DATE:

CAEG FILE NAME: CE_ACE_5322_1_SO_R5
DRAWING NO: CE-D-5322-1
SHEET ___ OF ___
REV: 5

SOFTWARE: Microstation V8 2004 Edition
PLOT SCALE: 1.0

USERNAME: JIM WILCKENS
FILENAME: 0-0006_5322_1_s0_r5.dgn
DATE: 8-10-2005

(CENTIMETERS)

(INCHES)