FAA-E-2214a
AMENDMENT-2
July 5, 1973
SUPERSEDING
AMEND.-1, 11/3/68

DEPARTMENT OF TRANSPORTATION
FEDERAL AVIATION ADMINISTRATION SPECIFICATION

GUN, SIGNAL LIGHT, PORTABLE

This amendment forms a part of FAA-E-2214a dated July 30, 1968.

* Page 4, paragraph 3.3.3: Add the following: "A #8-32 brass screw and threaded terminal shall be provided for connection from the shell of the lamp socket to the terminal strip. Complete electrical insulation of the lamp socket from the gun frame shall be maintained as indicated on the associated drawings. The resistance to ground when tested at 500 volts shall be not less than 1 megohm." *

Page 5, paragraph 3.4: First sentence change to read: "The gun shall be adjusted with the red filter in the normal position and the green filter in the alternate position."

* Page 6: Add the following paragraph:

"4.3.1 Tests.- The test plan submitted in accordance with paragraph 4.2 shall include but not be restricted to tests for the following requirements:

Resistance to ground, paragraph 3.3.3
Candle power distribution, paragraph 3.4.1"

Drawing D-5056: The listed sheets were revised as follows:

(a) Sheet 1 - "The mounting details of the lamp socket assembly, item 10, and the vertical focusing adjusting plate, item 12, were changed. A brass screw terminal was provided in item 10."

(b) Sheet 2 - Change the description for item 10 to read "Prefocus Lamp Base Assembly and Insulating Panel." Delete "two #6-32 x 5/16 inch round head machine screws stainless steel," and add "two #6-32 x 5/16 inch round head machine screws, nylon." "Add "one #8-32 x ¼ inch round head machine screw brass."

(c) Sheet 5 - Change the mounting holes of the lamp socket assembly, item 10; add a #8-32 brass screw to the assembly. Detail "the new item 10A, insulating panel."

(d) Sheet 9 - Change the mounting holes of the vertical focusing adjusting plate assembly, item 12.

(e) Sheet 10 - Delete the "item 12B, stainless steel pin." *

* * * * *

ATTACHMENTS

DWG. NO. D-5056-1
D-5056-2
D-5056-5
D-5056-9
D-5056-10

SHEET	PART NUMBER	DESCRIPTION	NUMBER REQ'D.
4	1	HOUSING ASSEMBLY	1
6	2	COVER GLASS RETAINER	1
—	3	COVER GLASS 6 1/4" DIA. X 1/8" THICK, GROUND EDGE	1
6	4	GASKET FOR COVER GLASS	2
10	5	PRISM ASSEMBLY	1
6	6	REFLECTOR SUPPORT	1
—	7	PARABOLIC REFLECTOR, LANCASTER LENS CO., 5 1/2" DIA. 5 1/4" FOCAL LENGTH	1
6	8A	REFLECTOR CLIP	3
6	8B	REFLECTOR PAD	3
7	9	SIGHT	1
5	10	PREFOCUS LAMP BASE ASSEMBLY & INSULATING PANEL	1
9	11	ADJUSTABLE FOCUSING SUPPORT	1
9	12	VERTICAL FOCUSING ADJUSTMENT PLATE ASSEMBLY	1
10	13	SPHERICAL REFLECTOR HOLDER	1
10	14	SPHERICAL REFLECTOR ASSEMBLY	1
—	15	LAMP #1507 PRE-FOCUSED BASE	1
9	16	HORIZONTAL FOCUSING ADJUSTING PLATE COMPLETE	1
9	17	MOUNTING PLATE COMPLETE FOR FOCUSING MECHANISM	1
8	18	HORIZONTAL ADJUSTING STUD FOR FOCUSING MECHANISM	1
8	19	CLAMPING WASHER FOR FOCUSING MECHANISM	1
9	20	FILTER CHANGER SUPPORT ASSEMBLY	1
8	21	OPERATING SHAFT AND GEAR	1
5	22	COLOR SCREEN BEVEL GEAR	1
8	23	COLOR SCREEN RED	1
8	24	COLOR SCREEN GREEN	1
5	25	COLOR SCREEN CLIP	2
5	26	COLOR SCREEN CLIP	1
5	27	COLOR SCREEN HOLDER	1
8	28	COLOR SCREEN CHANGER SPRING	1
8	28A	COLOR SCREEN CHANGER SPRING RETAINING WASHER	1
—	29	PUSH BUTTON PIN (ROLL PIN #062 X 1/2" LONG CADMIUM PLATED)	2
5	30	PUSH BUTTON	1
7	31	TRIGGER SHAFT	1
7	32	TRIGGER	1
7	33	TRIGGER STOP	1
10	34	TRIGGER STOP SPRING	1
10	35	SPACER FOR TRIGGER STOP	1
10	36	TRIGGER SPRING	1
10	37	RETAINING WASHER FOR TRIGGER SPRING	1
8	38	BRASS WASHER FOR OPERATING SHAFT	1
8	39	STAINLESS STEEL WASHER FOR OPERATING SHAFT	1
12	40	HANDLE	1
11	41	HANDLE COVER	1
—	42	TERMINAL BLOCK, HOWARD B. JONES #140-2	1
—	43	WIRE #16 STRANDED TYPE TF	AS REQ'D.
—	44	SWITCH, GENERAL ELECTRIC CO. TYPE CR-1070-103 SINGLE POLE SWITCHETTE	1
—	45	AMPHENOL RECEPTACLE #AN-3102-10 SL-4P	1
7	46	HANGER	1
7	46A	HANGER BOLT	1
—	47	NAME PLATE	1

MACHINE SCREWS, NUTS AND WASHERS	NUMBER REQ'D.
#2-56 X 3/4" ROUND HEAD MACHINE SCREWS STAINLESS STEEL	2
#4-40 X 1/4" FILLISTER HEAD MACHINE SCREWS STAINLESS STEEL	7
#4-40 X 5/16" ROUND HEAD MACHINE SCREWS STAINLESS STEEL	3
#4-40 X 3/8" ROUND HEAD MACHINE SCREWS STAINLESS STEEL	2
#4- X 1/4" BINDING HEAD SELF TAPPING SCREW STAINLESS STEEL	4
#6-32 X 1/4" ROUND HEAD MACHINE SCREWS STAINLESS STEEL	2
#6-32 X 1/4" KNURLED HEAD THUMB SCREWS STAINLESS STEEL	3
#6-32 X 5/16" ROUND HEAD MACHINE SCREWS STAINLESS STEEL	3
#6-32 X 1/2" ROUND HEAD MACHINE SCREWS STAINLESS STEEL	2
#8-32 X 1 1/4" ROUND HEAD MACHINE SCREW STAINLESS STEEL	1
#10-32 X 5/8" N.F. THD. HEX. HD. MACH. SCREWS STAINLESS STEEL	3
#10-32 X 7/16" N.F. THD. HEX. HD. MACH. SCREW STAINLESS STEEL	2
#10-32 X 1/2" FILLISTER HEAD MACHINE SCREWS STAINLESS STEEL	8
#1/4"-20 X 3/4" FILLISTER HEAD MACHINE SCREWS STAINLESS STEEL	2
#1/4"-20 X 3/4" N.C. THD. SET SCREW STAINLESS STEEL	1
#1/4"-20 X 7/8" CAPTIVE SCREW STAINLESS STEEL	1
#10-32 X 5/8" FILLISTER HEAD MACHINE SCREWS STAINLESS STEEL	2
#6-32 X 5/16" ROUND HEAD MACHINE SCREWS, NYLON	2
#8-32 X 1/4" ROUND HEAD MACHINE SCREW BRASS	1
#8-32 HEXAGON NUT STAINLESS STEEL	1
#10-32 HEXAGON NUTS STAINLESS STEEL	7
#10-32 HEXAGON LOCKNUT STAINLESS STEEL	1
#12-24 HEXAGON NUT STAINLESS STEEL	1
1/4"-20 HEXAGON NUTS STAINLESS STEEL	5
5/16"-18 HEXAGON NUTS STAINLESS STEEL	2
5/16"-18 ELASTIC STOP NUT STAINLESS STEEL	1
3/8"-16 THIN HEXAGON NUT STAINLESS STEEL	1
1/4"-20 ELASTIC STOP NUT THIN TYPE STAINLESS STEEL	1
#4 SHAKEPROOF INTERNAL TOOTH LOCK WASHERS STAINLESS STEEL	11
#6 SHAKEPROOF INTERNAL TOOTH LOCK WASHERS STAINLESS STEEL	7
#8L FLAT WASHER STAINLESS STEEL	1
#10S FLAT WASHER STAINLESS STEEL	2
#10 SHAKEPROOF INTERNAL TOOTH LOCK WASHERS STAINLESS STEEL	11
1/4" SHAKEPROOF INTERNAL TOOTH LOCK WASHERS STAINLESS STEEL	3

REV LTR	DATE	DESCRIPTION	REVIEWED	APPROVED
B	4-26-73	ADDED NYLON & BRASS SCREWS		
A	4-15-68	TITLE BLOCK REVISED; CHANGE MATERIAL SCREWS, NUTS & WASHERS; CHANGE PARTS 15, 45		

DEPARTMENT OF TRANSPORTATION
FEDERAL AVIATION ADMINISTRATION
WASHINGTON, D.C. 20590

PARTS LIST
FOR PORTABLE SIGNAL LIGHT GUN

TYPE W-1

REVIEWED BY

SUBMITTED BY: T.E. LEDBETTER JR.
CHIEF, TERMINAL SYSTEMS SECTION, RD-457

APPROVED BY: E. BROOKLEY JR.
CHIEF, SUPPORT SYSTEMS BRANCH, RD-430

DESIGNED BY: TCC
DRAWN BY: JAB
CHECKED BY: BZ/WER

PREPARED BY
SYSTEMS RESEARCH AND DEVELOPMENT SERVICE
ENVIRONMENTAL DEVELOPMENT DIVISION

DATE: 4-15-68

DRAWING NO. D-5056-2

REV. LTR. B

THIS SERIES SUPERSEDES D-4886 SERIES

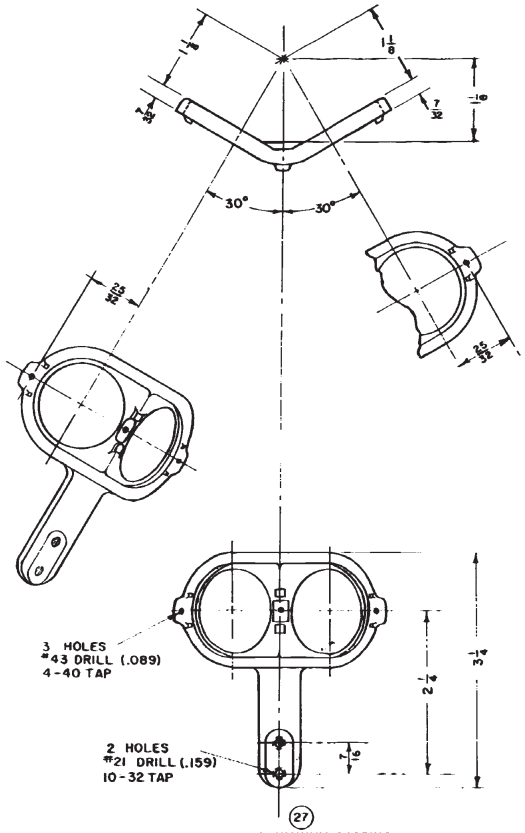

(27)
ALUMINUM CASTING
COLOR SCREEN HOLDER

FINISH: PRIME & PAINT DULL BLACK

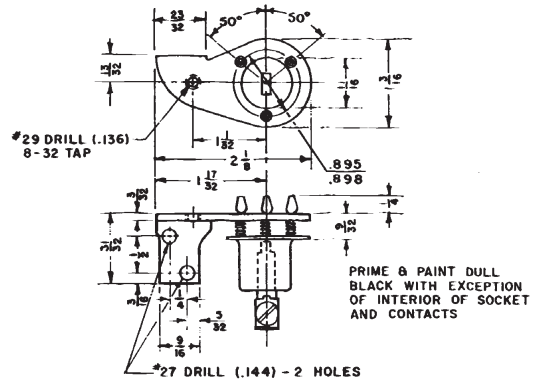

(10)
PREFOCUS BASE RECEPTACLE FOR USE
WITH G.E. #1507 LAMP OR EQUAL

SIMILAR TO COLE HERSEE #2711 EXCEPT THREE HOLDING PINS ARE LOCATED 90° FROM STANDARD POSITION AND SOCKET BODY IS DEEPER TO ACCOMODATE GENERAL ELECTRIC #1507 LAMP.

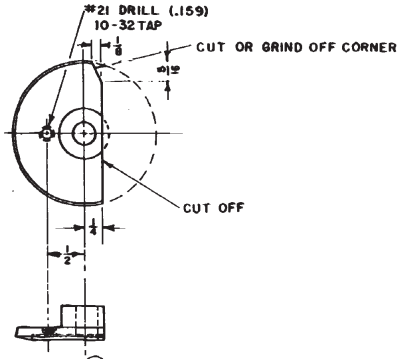

(22)
COLOR SCREEN BEVEL GEAR
BRASS (GALV.)

MAKE FROM: BOSTON GEAR #486, 2" P.D. 32P, 64T
1/4" FACE, 5/16" DIA. HOLE OR EQUAL.

FINISH: PRIME & PAINT DULL BLACK,
WITH EXCEPTION OF TEETH

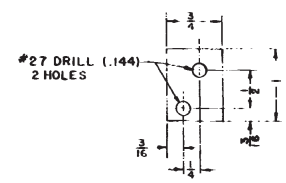

(10A)
INSULATING PANEL
1/16" RIGID NON-CONDUCTING

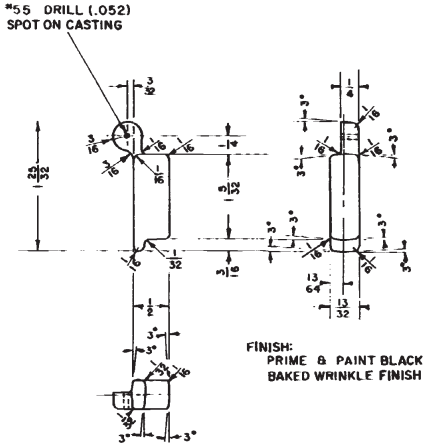

FINISH:
PRIME & PAINT BLACK
BAKED WRINKLE FINISH

(30)
CAST ALUMINUM
PUSH BUTTON

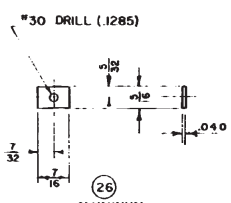

(26)
ALUMINUM
COLOR SCREEN CLIP

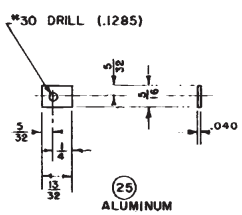

(25)
ALUMINUM
COLOR SCREEN CLIP

FINISH: PRIME & PAINT DULL BLACK

SCALE
0 1 2 3 IN.

THIS SERIES SUPERSEDES D-4886 SERIES

REV. LTR	DATE	DESCRIPTION	CHECKED	APPROVED
B	4-26-73	CHG MTG HOLES OF ITEM 10,		
		ADDED INSULATING PANEL, ITEM 10A		
A	4-15-68	TITLE BLOCK REVISED		

DEPARTMENT OF TRANSPORTATION
FEDERAL AVIATION ADMINISTRATION
WASHINGTON, D.C. 20590

DETAILS
FOR PORTABLE SIGNAL LIGHT GUN

TYPE W-1

REVIEWED BY
SUBMITTED BY: I. L. LEDBETTER JR, CHIEF, TERMINAL SYSTEMS SECTION, RD-452
APPROVED BY: E. BROMLEY JR, CHIEF, SUPPORT SYSTEMS BRANCH, RD-450
DESIGNED BY: Tom A. Hearn
CHECKED BY: SZ/MKR
ISSUED BY: SYSTEMS RESEARCH AND DEVELOPMENT SERVICE, ENVIRONMENTAL DEVELOPMENT DIVISION
DATE - 4-15-68
DRAWING NO. D-5056-5
REV LTR B

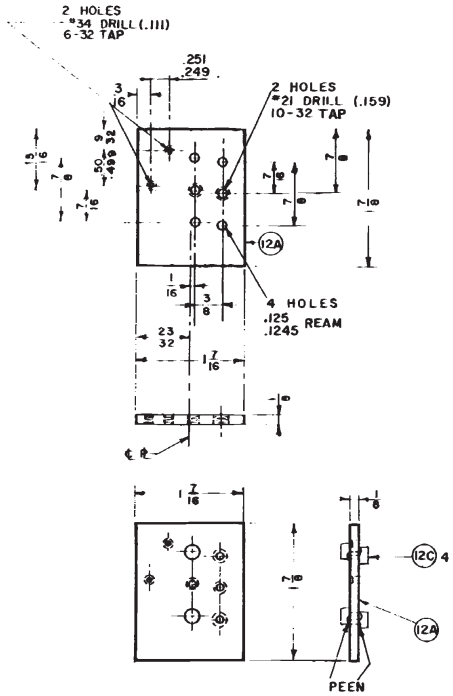

(12)
VERTICAL FOCUSING ADJUSTING PLATE COMPLETE
ALUMINUM

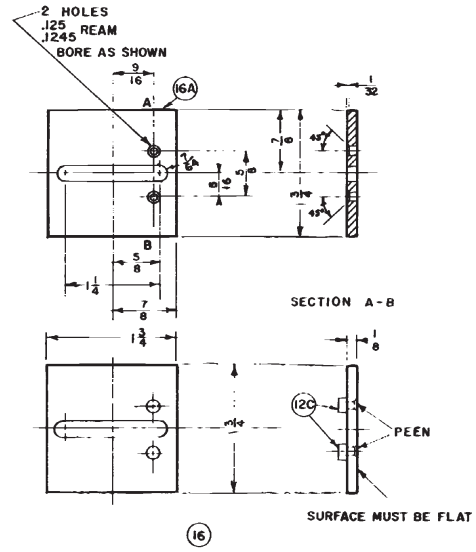

(16)
HORIZONTAL FOCUSING ADJUSTING PLATE COMPLETE
ALUMINUM

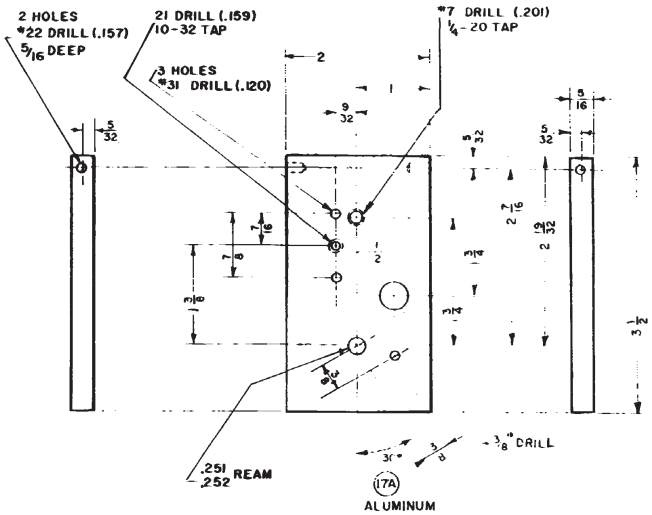

(17A)
ALUMINUM

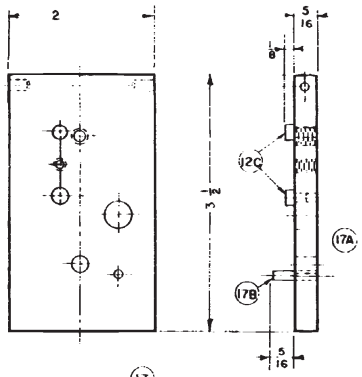

(17)
MOUNTING PLATE COMPLETE FOR FOCUSING MECHANISM

NOTE: ALL EXPOSED SURFACES SHALL BE PRIMED AND PAINTED DULL BLACK.

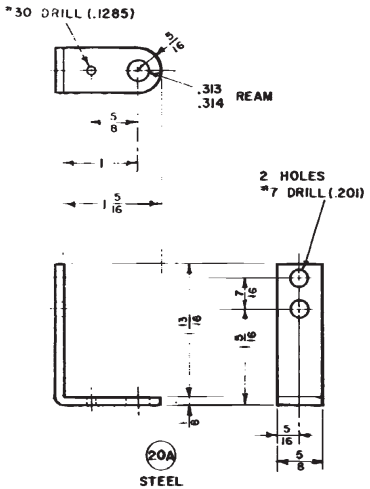

(20A)
STEEL

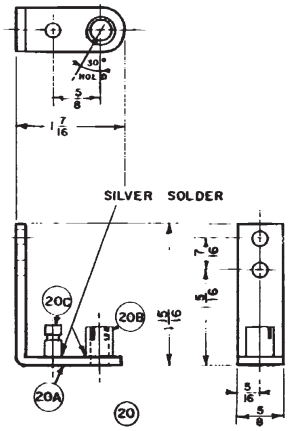

(20)
FILTER CHANGER SUPPORT COMPLETE

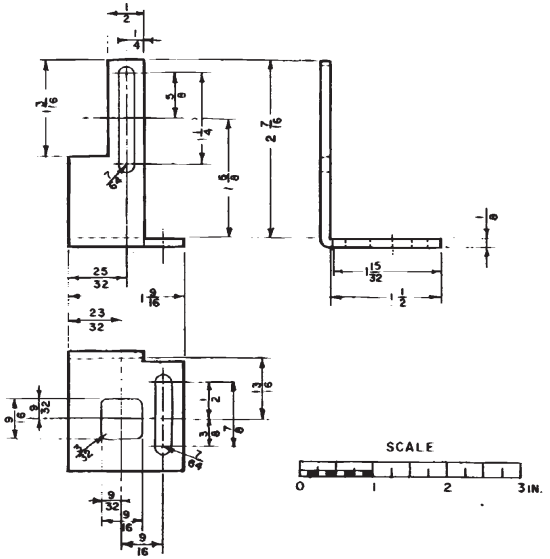

(11)
STEEL
ADJUSTABLE FOCUSING SUPPORT

THIS SERIES SUPERSEDES D-4886 SERIES

REV. LTR	DATE	DESCRIPTION	CHECKED	APPROVED
B	4-27-73	CHANGED M.I.G. HOLES IN ITEM 12		
A		TITLE BLOCK REVISED		

DEPARTMENT OF TRANSPORTATION
FEDERAL AVIATION ADMINISTRATION
WASHINGTON, D.C. 20590

DETAILS
FOR PORTABLE SIGNAL LIGHT GUN

TYPE W-1

REVIEWED BY

SUBMITTED BY: Isaac C. Ledbetter Jr. — I.L. LEDBETTER JR.
CHIEF, TERMINAL SYSTEMS SECTION, RD-452

APPROVED BY: Edmund Bromley Jr. — E. BROMLEY JR.
CHIEF, SUPPORT SYSTEMS BRANCH, RD-450

DESIGNED BY: VEE
DRAWN BY: Tom A. Beard
CHECKED BY: SZ

ISSUED BY: SYSTEMS RESEARCH AND DEVELOPMENT SERVICE
ENVIRONMENTAL DEVELOPMENT DIVISION

DATE
DRAWING NO. D-5056-9
REV. LTR B

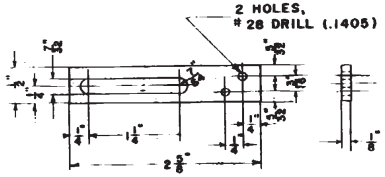

SUPPORT & ADJ. PLATE
BRASS
(3B)

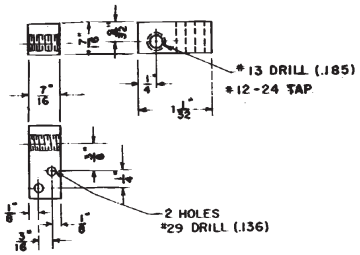

SUPPORT BLOCK
BRASS
(13A)

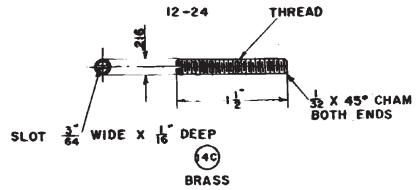

(4C)
BRASS
STUD FOR SPHERICAL REFLECTOR

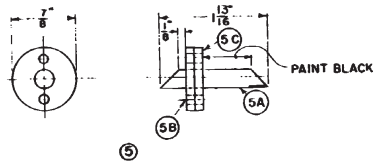

(5)
PRISM ASSEMBLY

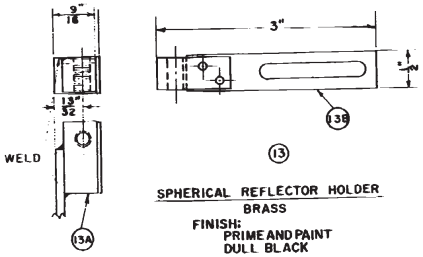

(13)
SPHERICAL REFLECTOR HOLDER
BRASS
FINISH:
PRIME AND PAINT
DULL BLACK

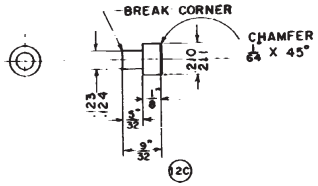

(12C)
ALUMINUM
SCALE - DOUBLE SIZE
GUIDE BUTTON FOR ADJUSTING PLATE
FINISH: PRIME AND PAINT DULL BLACK

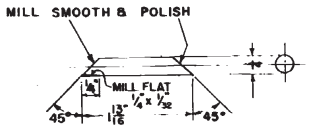

(5A)
PLEXIGLASS
PRIMA

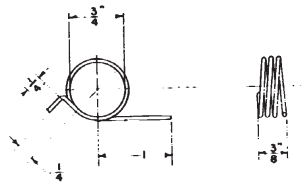

USE 042 DIA. STN STL
WIRE
(36)
TRIGGER SPRING

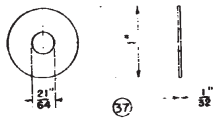

(37)
RETAINING WASHER FOR TRIGGER SPRING
BRASS

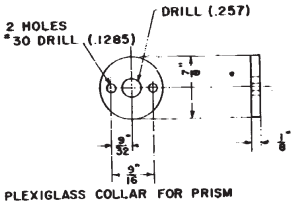

PLEXIGLASS COLLAR FOR PRISM
(5B)

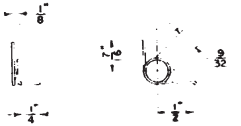

USE .036 DIA. STN STL. WIRE
(34)
TRIGGER STOP SPRING

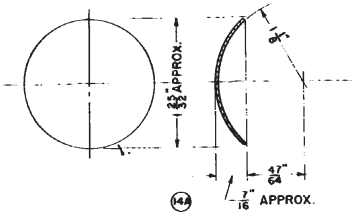

(14A)
BRASS #16 B&S GA (.050)
SPHERICAL REFLECTOR

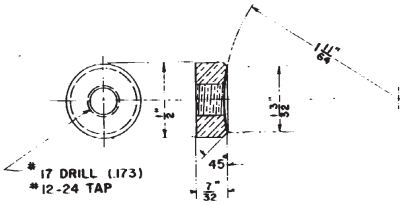

(14B)
BRASS
NUT FOR SPHERICAL REFLECTOR

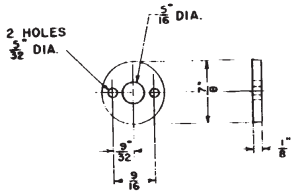

GUM RUBBER GASKET FOR PRISM
(5C)

#16 DRILL (.177)

(35)
BRASS
TRIGGER STOP SPACER

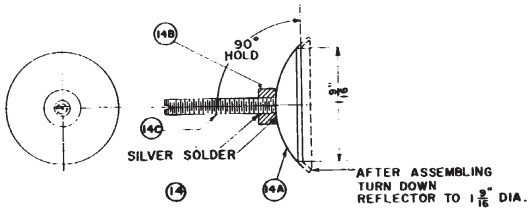

(14)
SPHERICAL REFLECTOR ASSEMBLY
REFLECTING SURFACE TO BE
VACUUM METALIZED ALUMINUM
FINISH: PRIME AND PAINT DULL BLACK
WITH EXCEPTION OF THREADS
AND REFLECTING SURFACE

SCALE
0 1 2 3 IN.

THIS SERIES SUPERSEDES D-4886 SERIES

REVISION	DATE	DESCRIPTION	CHECKED	APPROVED
B	4-29-73	DELETE ITEM 12B		
A	4-5-68	TITLE BLOCK REVISED		

DEPARTMENT OF TRANSPORTATION
FEDERAL AVIATION ADMINISTRATION
WASHINGTON, D.C. 20590

DETAILS
FOR PORTABLE SIGNAL LIGHT GUN

TYPE W-1

REVIEWED BY

SUBMITTED BY: I.L. LEDBETTER JR
CHIEF, TERMINAL SYSTEMS SECTION, RD-452

DRAWN BY: P.C.
CHECKED BY: Tack A. Beard

ISSUED BY: SYSTEMS RESEARCH AND DEVELOPMENT SERVICE
ENVIRONMENTAL DEVELOPMENT DIVISION

APPROVED BY: E. BROMLEY JR
CHIEF, SUPPORT SYSTEMS BRANCH, RD-450
DATE: 4-15-68

DRAWING NO. D-5056-10

REV. LTR.

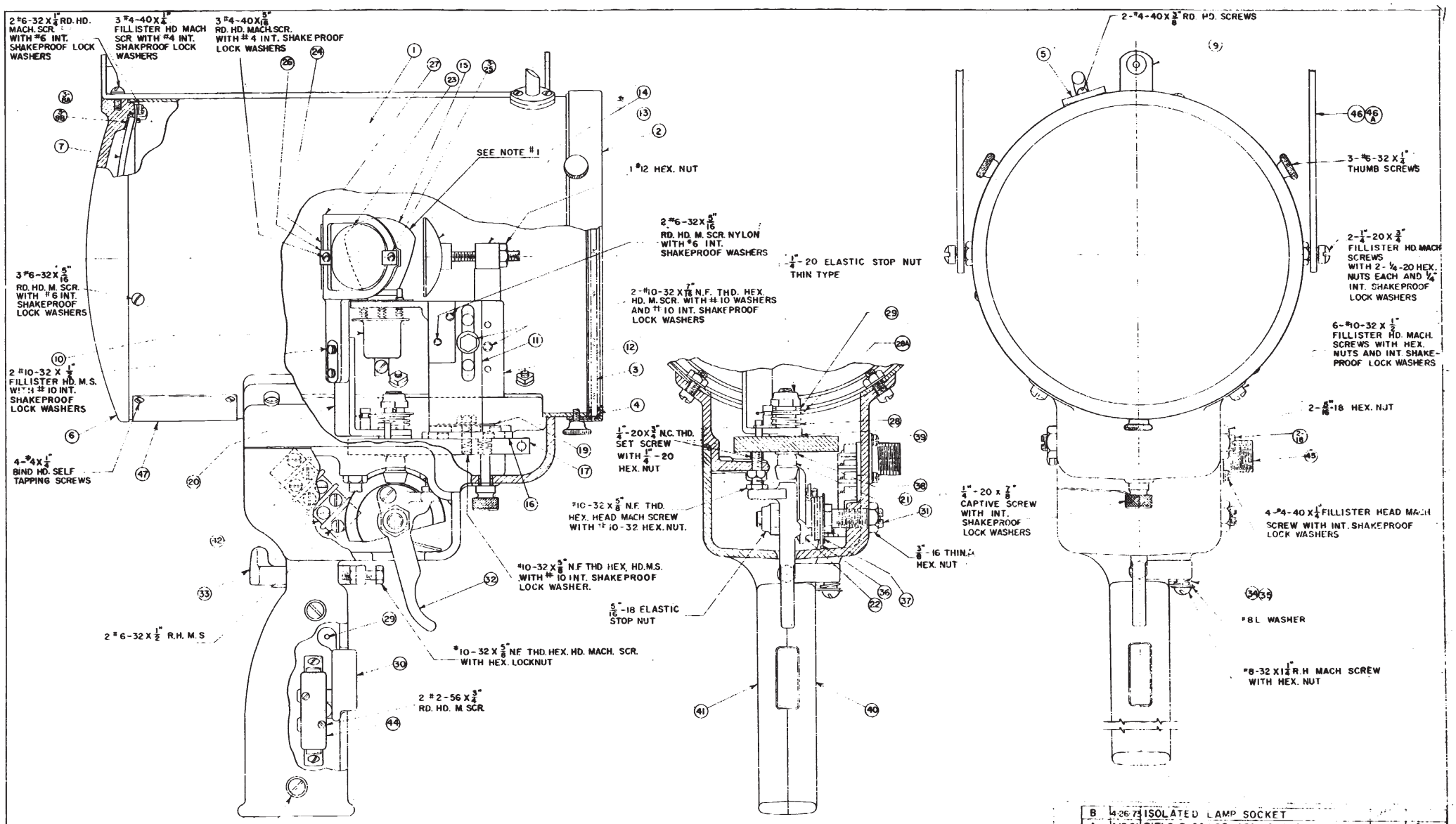

NOTE 1- ORIENT LAMP SO HORIZONTAL AXIS OF FILAMENT IS PARALLEL TO OPTICAL AXIS OF REFLECTORS
2- PART 45 TO BE INSTALLED SO MATING CONNECTOR TURNS UP.
3- ALL SCREWS, NUTS AND WASHERS SHALL BE STAINLESS STEEL UNLESS OTHERWISE NOTED

SCALE
0 1 2 3 IN.

REV. LTR	DATE	DESCRIPTION	CHECKED	APPROVED
B	4-26-73	ISOLATED LAMP SOCKET		
A	4-15-68	TITLE BLOCK REVISED; CHANGE MATERIAL SCREWS, NUTS & WASHERS		

DEPARTMENT OF TRANSPORTATION
FEDERAL AVIATION ADMINISTRATION
WASHINGTON, D.C. 20590

PORTABLE SIGNAL LIGHT GUN ASSEMBLY

TYPE W-1

REVIEWED BY
SUBMITTED BY: Isaac L. Ledbetter Jr. — L. L. LEDBETTER JR — CHIEF, TERMINAL SYSTEMS SECTION, RD-452
APPROVED BY: Edmund Bromley — E. BROMLEY JR — CHIEF, SUPPORT SYSTEMS BRANCH, RD-450
DESIGNED BY: FCC
DRAWN BY: Tom A. Bosco
CHECKED BY: SZ
ISSUED BY: SYSTEMS RESEARCH AND DEVELOPMENT SERVICE — ENVIRONMENTAL DEVELOPMENT DIVISION
DATE 4-15-68
DRAWING NO. D-5056-1
REV. LTR

THIS SERIES SUPERSEDES D-4886 SERIES

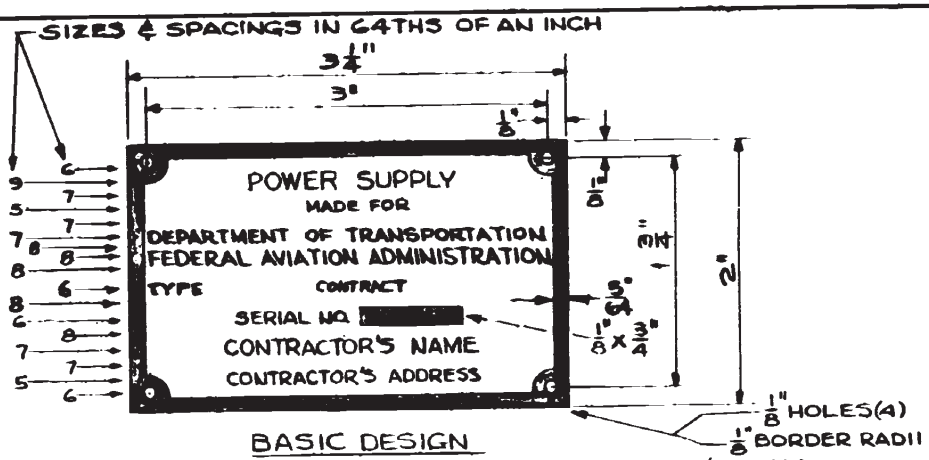

BASIC DESIGN

SINGLE-LINE EQUIPMENT TITLE AND CONTRACTOR'S NAME; NO SUB-CONTRACTOR

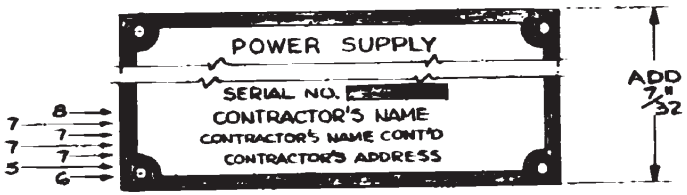

TWO LINES FOR CONTRACTOR'S NAME

(INCREASE HEIGHT OF BASIC DESIGN BY 7/32")

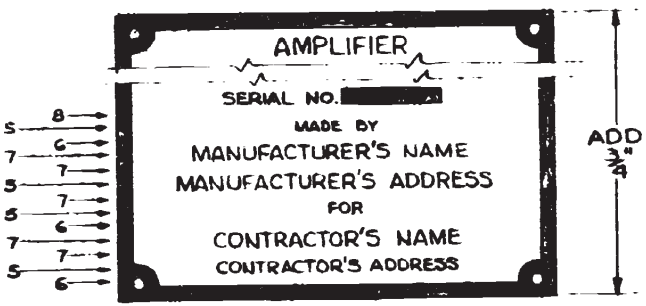

EQUIPMENT MADE BY SUB-CONTRACTOR

(INCREASE HEIGHT OF BASIC DESIGN BY 3/4")

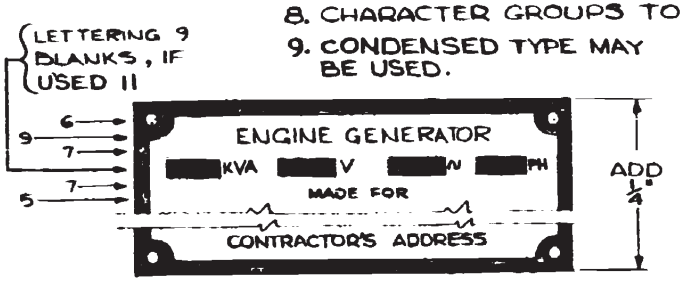

TWO LINE-EQUIPMENT TITLE

(INCREASE HEIGHT OF BASIC DESIGN BY 1/4")

NOTES

1. ACCEPTABLE MATERIALS:
   0.03 INCH MIN. ALUMINUM WITH OVERALL WATER DIP LACQUER (PROHIBITED ON ENGINE GENERATORS AND EQUIPMENT INSTALLED OUT OF DOORS); OR 0.03 INCH MIN. NICKEL SILVER (ANY USE); PROCESS: REVERSE ETCHED; THE FOLLOWING TO BE RAISED, WITH DULL METAL FINISH: BORDER, SERIAL NUMBER AND RATING DATA BLANKS, AND ALL LETTERS AND NUMBERS EXCEPT SERIAL NUMBER; DEPRESSED BACKGROUND FINISHED IN BLACK ENAMEL.
   — OR —
   0.02 INCH MIN. PHOTOSENSITIVE ANODIZED ALUMINUM PROCESSED FOR WHITE METAL CHARACTERS WITH JET BLACK BACKGROUND. PHOTOSENSITIVE SILVER COMPOUNDS SHALL BE IMBEDDED WITHIN THE OXIDE LAYER, AND IMAGE SHALL BE SEALED IN OXIDE LAYER BY CHEMICAL TREATMENT (ANY USE EXCEPT PROHIBITED ON ENGINE GENERATORS).
2. SERIAL NUMBER: ENGRAVE OR DIE STAMP. ALSO APPLIES WHERE BLANKS ARE USED FOR RATING DATA (SEE TWO-LINE TITLE).
3. IF NO CONTRACT NUMBER, SUBSTITUTE "ORDER NO" FOR "CONTRACT".
4. NAME PLATE SIZE MAY BE REDUCED WHERE MOUNTING SPACE IS LIMITED. ALL DIMENSIONS AND LETTER SIZES SHALL BE REDUCED APPROXIMATELY IN PROPORTION, EXCEPT THAT HOLE SIZE, HOLE CORNER DIMENSIONS, AND MARGINAL RADII, SHALL REMAIN 1/8".
5. EQUIPMENT TITLE, TYPE DESIGNATION, AND SERIAL NUMBERS, WILL BE FURNISHED BY GOV'T. AFTER AWARD OF CONTRACT.
6. TOLERANCE ON DIMENSIONS ±0.010", EXCEPT HOLE SIZE AND HOLE-TO-HOLE SPACING ±0.005".
7. SUBCONTRACTOR NAME PLATE DESIGN IS MANDATORY WHERE EQUIPMENT IS MANUFACTURED BY SUBCONTRACTOR.
8. CHARACTER GROUPS TO BE CENTERED.
9. CONDENSED TYPE MAY BE USED.

REV.	DATE	DESCRIPTION	CHECKED	APPROVED
H		MOD. FOR DOT		7/08/67 KTO
G	1-10-67	ADD ENGINE GEN. NOTES		
F	12-17-64	REVISED DESIGN AND NOTES	✓	

DEPARTMENT OF TRANSPORTATION
FEDERAL AVIATION ADMINISTRATION
WASHINGTON, D.C. 20590

STANDARD NAMEPLATE

SUBMITTED BY [signature]

APPROVED BY K. T. Ostrand

SYSTEMS STANDARDS BRANCH

REVIEWED BY

DESIGNED BY F.A.B.S.

DRAWN BY E.J.B.

CHECKED BY

ISSUED BY SYSTEMS RESEARCH AND DEVELOPMENT SERVICE

DATE 3-15-62

DRAWING NO. B-21216-H

FAA-E-2214a
Amendment-1
October 3, 1968

DEPARTMENT OF TRANSPORTATION
FEDERAL AVIATION ADMINISTRATION SPECIFICATION

GUN, SIGNAL LIGHT, PORTABLE

This amendment forms a part of FAA-E-2214a dated July 30, 1968

Page 5, paragraph 3.4: First sentence, change to read: "The gun shall be adjusted with the red filter in the normal position and the green filter in the alternate position."

* * * * *

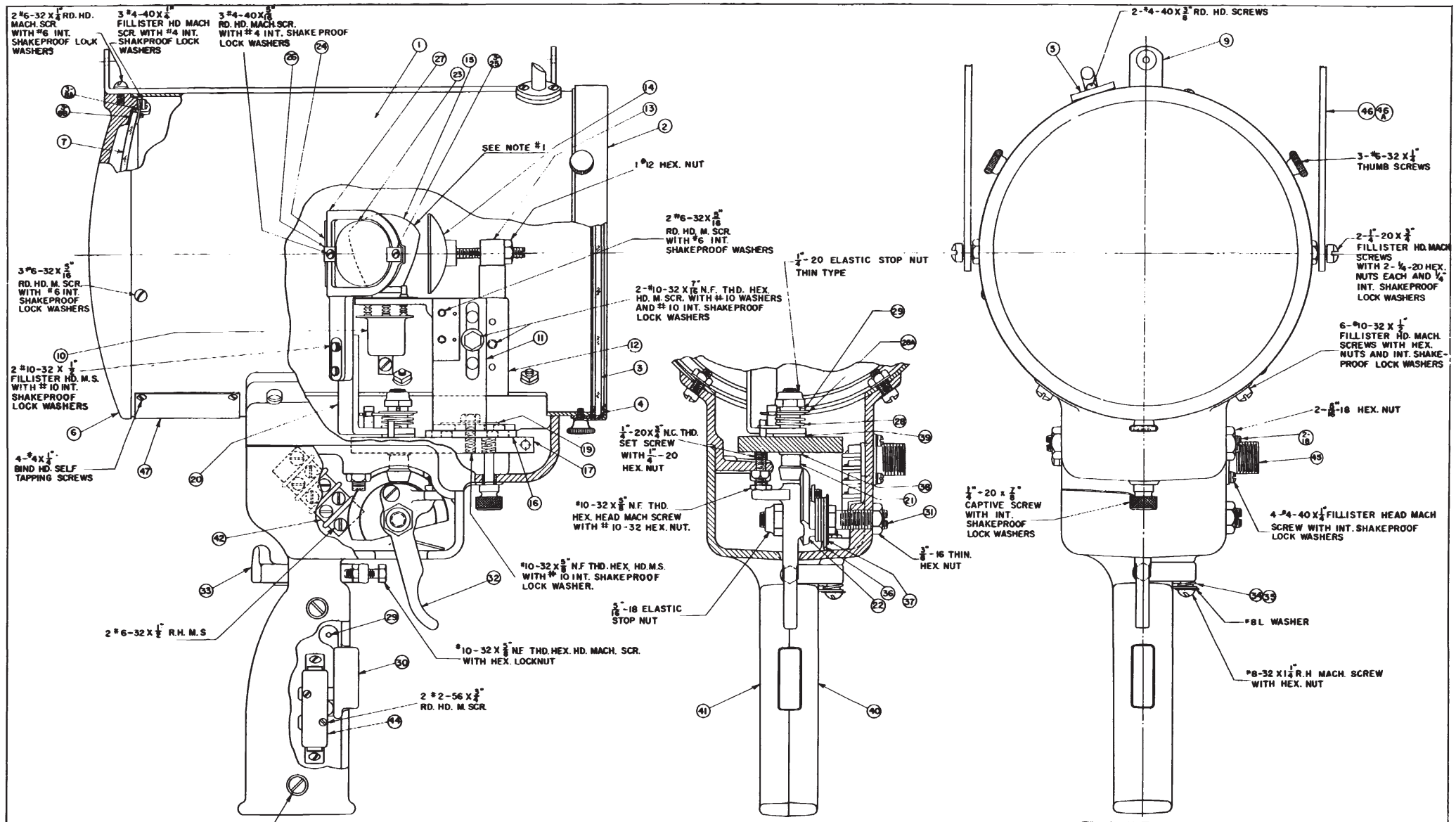

NOTE 1- ORIENT LAMP SO HORIZONTAL AXIS OF FILAMENT IS PARALLEL TO OPTICAL AXIS OF REFLECTORS
2- PART 45 TO BE INSTALLED SO MATING CONNECTOR TURNS UP.
3- ALL SCREWS, NUTS AND WASHERS SHALL BE STAINLESS STEEL UNLESS OTHERWISE NOTED

SCALE
0 1 2 3 IN.

REV'D	DESCRIPTION	CHECKED	APPROVED
A	4-15-68 TITLE BLOCK REVISED; CHANGE MATERIAL SCREWS, NUTS & WASHERS	vee	[illegible]

DEPARTMENT OF TRANSPORTATION
FEDERAL AVIATION ADMINISTRATION
WASHINGTON, D.C. 20590

PORTABLE SIGNAL LIGHT GUN
ASSEMBLY
TYPE W-1

REVIEWED BY
SUBMITTED BY: Isaac L. Ledbetter Jr. — I. L. LEDBETTER JR — CHIEF, TERMINAL SYSTEMS SECTION, RD-492
APPROVED BY: Edmund Bromley Jr. — E. BROMLEY JR — CHIEF, SUPPORT SYSTEMS BRANCH, RD-480
DRAWN BY: [illegible]
CHECKED BY: [illegible]
ISSUED BY: SYSTEMS RESEARCH AND DEVELOPMENT SERVICE, ENVIRONMENTAL DEVELOPMENT DIVISION
DATE - 4-15-68
DRAWING NO. D-5056-1
REV. A

THIS SERIES SUPERSEDES D-4886 SERIES

SHEET	PART NUMBER	DESCRIPTION	NUMBER REQ'D.
4	1	HOUSING ASSEMBLY	1
6	2	COVER GLASS RETAINER	1
—	3	COVER GLASS 6¼" DIA. X ⅛" THICK, GROUND EDGE	1
6	4	GASKET FOR COVER GLASS	2
10	5	PRISM ASSEMBLY	1
6	6	REFLECTOR SUPPORT	1
—	7	PARABOLIC REFLECTOR, LANCASTER LENS CO., 5½" DIA. 5¼" FOCAL LENGTH	1
6	8A	REFLECTOR CLIP	3
6	8B	REFLECTOR PAD	3
7	9	SIGHT	1
5	10	PREFOCUS LAMP BASE ASSEMBLY	1
9	11	ADJUSTABLE FOCUSING SUPPORT	1
9	12	VERTICAL FOCUSING ADJUSTMENT PLATE ASSEMBLY	1
10	13	SPHERICAL REFLECTOR HOLDER	1
10	14	SPHERICAL REFLECTOR ASSEMBLY	1
—	15	LAMP #1507 PRE-FOCUSED BASE	1
9	16	HORIZONTAL FOCUSING ADJUSTING PLATE COMPLETE	1
9	17	MOUNTING PLATE COMPLETE FOR FOCUSING MECHANISM	1
8	18	HORIZONTAL ADJUSTING STUD FOR FOCUSING MECHANISM	1
8	19	CLAMPING WASHER FOR FOCUSING MECHANISM	1
9	20	FILTER CHANGER SUPPORT ASSEMBLY	1
8	21	OPERATING SHAFT AND GEAR	1
5	22	COLOR SCREEN BEVEL GEAR	1
8	23	COLOR SCREEN RED	1
8	24	COLOR SCREEN GREEN	1
5	25	COLOR SCREEN CLIP	2
5	26	COLOR SCREEN CLIP	1
5	27	COLOR SCREEN HOLDER	1
8	28	COLOR SCREEN CHANGER SPRING	1
8	28A	COLOR SCREEN CHANGER SPRING RETAINING WASHER	1
—	29	PUSH BUTTON PIN (ROLL PIN #062 X ½" LONG CADMIUM PLATED)	2
5	30	PUSH BUTTON	1
7	31	TRIGGER SHAFT	1
7	32	TRIGGER	1
7	33	TRIGGER STOP	1
10	34	TRIGGER STOP SPRING	1
10	35	SPACER FOR TRIGGER STOP	1
10	36	TRIGGER SPRING	1
10	37	RETAINING WASHER FOR TRIGGER SPRING	1
8	38	BRASS WASHER FOR OPERATING SHAFT	1
8	39	STAINLESS STEEL WASHER FOR OPERATING SHAFT	1
12	40	HANDLE	1
11	41	HANDLE COVER	1
—	42	TERMINAL BLOCK, HOWARD B. JONES #140-2	1
—	43	WIRE #16 STRANDED TYPE TF	AS REQ'D.
—	44	SWITCH, GENERAL ELECTRIC CO. TYPE CR-1070-103 SINGLE POLE SWITCHETTE	1
—	45	AMPHENOL RECEPTACLE #AN-3102-10 SL-4P	1
7	46	HANGER	1
7	46A	HANGER BOLT	1
—	47	NAME PLATE	1

MACHINE SCREWS, NUTS AND WASHERS	NUMBER REQ'D.
#2-56 X ¾" ROUND HEAD MACHINE SCREWS STAINLESS STEEL	2
#4-40 X ¼" FILLISTER HEAD MACHINE SCREWS STAINLESS STEEL	7
#4-40 X 5/16" ROUND HEAD MACHINE SCREWS STAINLESS STEEL	3
#4-40 X ⅜" ROUND HEAD MACHINE SCREWS STAINLESS STEEL	2
#4- X ¼" BINDING HEAD SELF TAPPING SCREW STAINLESS STEEL	4
#6-32 X ¼" ROUND HEAD MACHINE SCREWS STAINLESS STEEL	2
#6-32 X ¼" KNURLED HEAD THUMB SCREWS STAINLESS STEEL	3
#6-32 X 5/16" ROUND HEAD MACHINE SCREWS STAINLESS STEEL	5
#6-32 X ½" ROUND HEAD MACHINE SCREWS STAINLESS STEEL	2
#8-32 X 1¼" ROUND HEAD MACHINE SCREW STAINLESS STEEL	1
#10-32 X ⅝" N.F. THD. HEX. HD. MACH. SCREWS STAINLESS STEEL	3
#10-32 X 7/16" N.F. THD. HEX. HD. MACH. SCREW STAINLESS STEEL	2
#10-32 X ½" FILLISTER HEAD MACHINE SCREWS STAINLESS STEEL	8
#¼"-20 X ¾" FILLISTER HEAD MACHINE SCREWS STAINLESS STEEL	2
#¼"-20 X ¾" N.C. THD. SET SCREW STAINLESS STEEL	1
#¼"-20 X ⅞" CAPTIVE SCREW STAINLESS STEEL	1
#10-32 X 5/8" FILLISTER HEAD MACHINE SCREWS STAINLESS STEEL	2
#8-32 HEXAGON NUT STAINLESS STEEL	1
#10-32 HEXAGON NUTS STAINLESS STEEL	7
#10-32 HEXAGON LOCKNUT STAINLESS STEEL	1
#12-24 HEXAGON NUT STAINLESS STEEL	1
¼"-20 HEXAGON NUTS STAINLESS STEEL	5
5/16"-18 HEXAGON NUTS STAINLESS STEEL	2
5/16"-18 ELASTIC STOP NUT STAINLESS STEEL	1
⅝"-16 THIN HEXAGON NUT STAINLESS STEEL	1
¼"-20 ELASTIC STOP NUT THIN TYPE STAINLESS STEEL	1
#4 SHAKEPROOF INTERNAL TOOTH LOCK WASHERS STAINLESS STEEL	11
#6 SHAKEPROOF INTERNAL TOOTH LOCK WASHERS STAINLESS STEEL	7
#8L FLAT WASHER STAINLESS STEEL	1
#10S FLAT WASHER STAINLESS STEEL	2
#10 SHAKEPROOF INTERNAL TOOTH LOCK WASHERS STAINLESS STEEL	11
¼" SHAKEPROOF INTERNAL TOOTH LOCK WASHERS STAINLESS STEEL	3

THIS SERIES SUPERSEDES D-4886 SERIES

REV. LTR	DATE	DESCRIPTION	CHECKED	APPROVED
A	4-15-68	TITLE BLOCK REVISED; CHANGE MATERIAL SCREWS, NUTS & WASHERS; CHANGE PARTS 15, 43	RCC	DLP

DEPARTMENT OF TRANSPORTATION
FEDERAL AVIATION ADMINISTRATION
WASHINGTON, D.C. 20-90

PARTS LIST FOR PORTABLE SIGNAL LIGHT GUN

TYPE W-1

REVIEWED BY

SUBMITTED BY: Dave C. Ledbetter, D. C. LEDBETTER JR, CHIEF, TERMINAL SYSTEMS SECTION, RD-462

APPROVED BY: Edward Bromley, E. BROMLEY JR, CHIEF, SUPPORT SYSTEMS BRANCH, RD-460

RESEARCH BY: RCC

DRAWN BY: Tom A. Rose

CHECKED BY: DLP / RCC

ISSUED BY: SYSTEMS RESEARCH AND DEVELOPMENT SERVICE, ENVIRONMENTAL DEVELOPMENT DIVISION

DATE 4-15-68

DRAWING NO. D-5056-2

REV. LTR. A

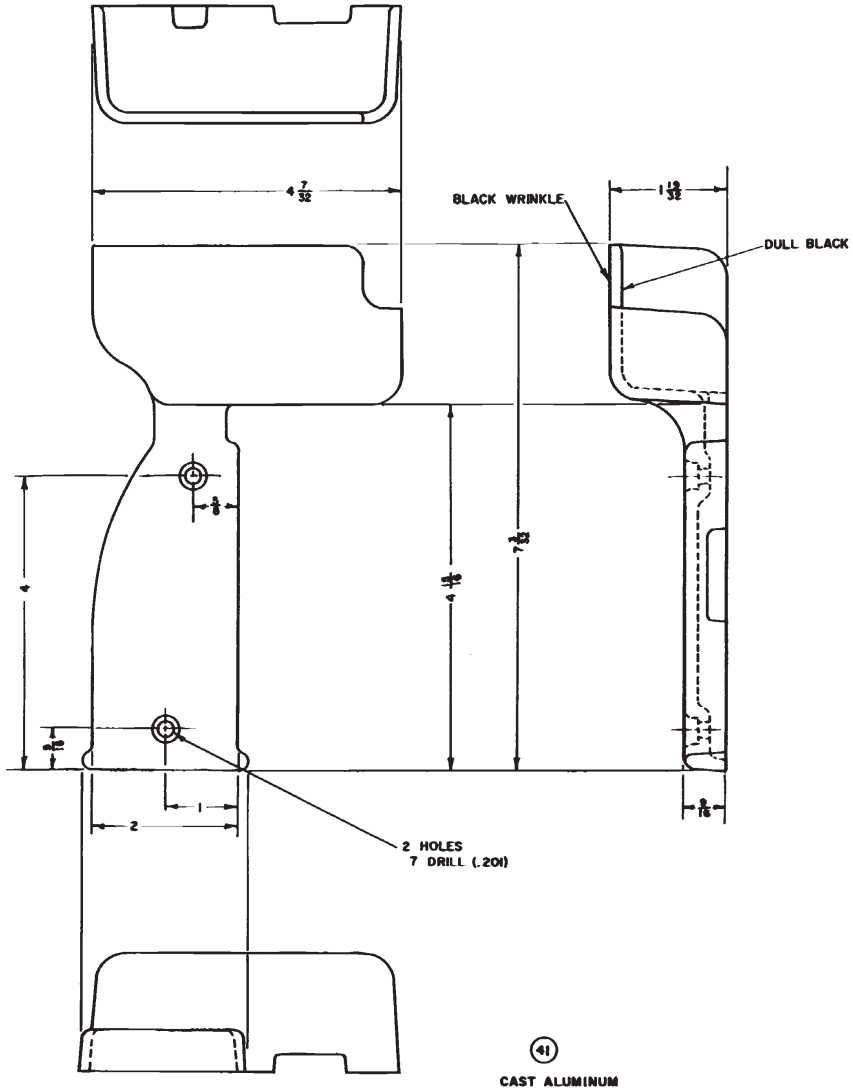

NOTE:

1.- PRIME AND PAINT EXTERIOR SURFACES BLACK WRINKLE FINISH INTERIOR SURFACES DULL BLACK FINISH, INCLUDING NUTS AND SCREW HEADS.

SCALE

0 1 2 3 IN.

REV. LTR	DATE	DESCRIPTION	CHECKED	APPROVED
A	4-15-68	TITLE BLOCK REVISED	pee	[illegible]

DEPARTMENT OF TRANSPORTATION
FEDERAL AVIATION ADMINISTRATION
WASHINGTON, D.C. 20590

COVER FOR HANDLE
FOR PORTABLE SIGNAL LIGHT GUN

TYPE W-1

REVIEWED BY

SUBMITTED BY: I.L. LEDBETTER JR. — CHIEF, TERMINAL SYSTEMS SECTION, RD-482

APPROVED BY: E. BROMLEY JR. — CHIEF, SUPPORT SYSTEMS BRANCH, RD-450

DRAWN BY: pee

ISSUED BY: SYSTEMS RESEARCH AND DEVELOPMENT SERVICE, ENVIRONMENTAL DEVELOPMENT DIVISION

DATE - 4-15-68

DRAWING NO. D-5056-11

REV. LTR. A

THIS SERIES SUPERSEDES D-4886 SERIES

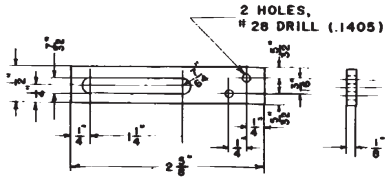

SUPPORT & ADJ. PLATE
BRASS
(3B)

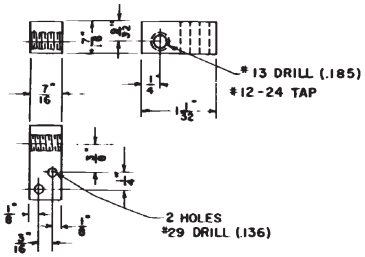

SUPPORT BLOCK
BRASS
(13A)

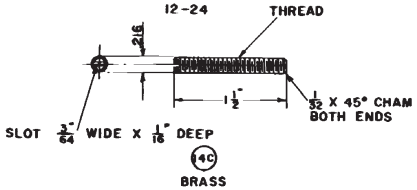

(14C)
BRASS
STUD FOR SPHERICAL REFLECTOR

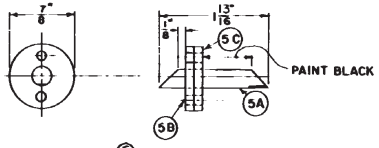

(5)
PRISM ASSEMBLY

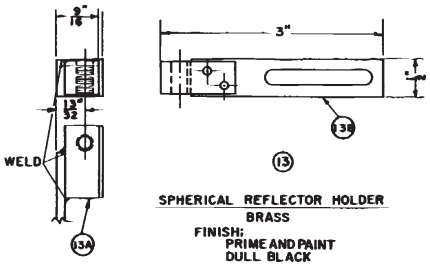

(13)
SPHERICAL REFLECTOR HOLDER
BRASS
FINISH:
PRIME AND PAINT
DULL BLACK

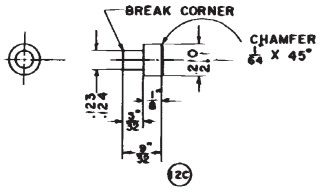

(12C)
ALUMINUM
SCALE - DOUBLE SIZE
GUIDE BUTTON FOR ADJUSTING PLATE
FINISH: PRIME AND PAINT DULL BLACK

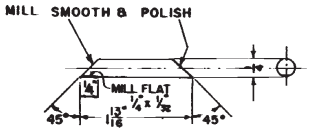

(5A)
PLEXIGLASS
PRISM

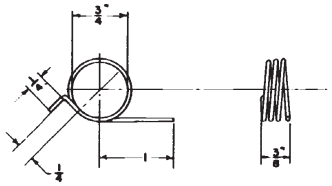

USE .042 DIA. STN STL
WIRE
(36)
TRIGGER SPRING

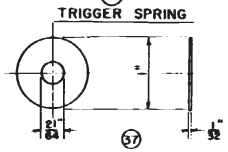

(37)
RETAINING WASHER FOR TRIGGER SPRING
BRASS

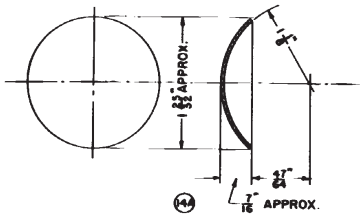

(14A)
BRASS #16 B&S GA (.050)
SPHERICAL REFLECTOR

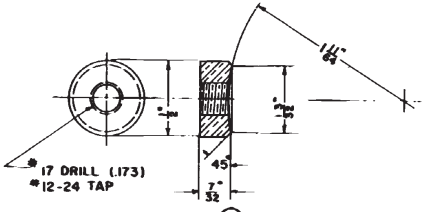

(14B)
BRASS
NUT FOR SPHERICAL REFLECTOR

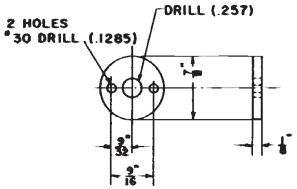

PLEXIGLASS COLLAR FOR PRISM
(5B)

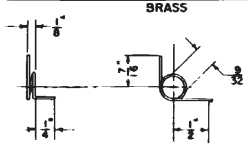

USE .036 DIA. STN. STL. WIRE
(34)
TRIGGER STOP SPRING

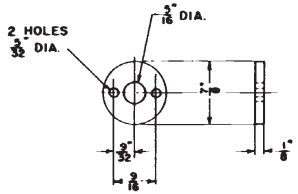

GUM RUBBER GASKET FOR PRISM
(5C)

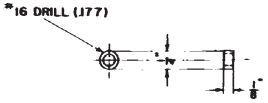

(35) BRASS
TRIGGER STOP SPACER

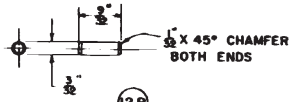

(12B)
STAINLESS STEEL
SCALE - DOUBLE SIZE
PIN FOR LAMP RECEPTACLE

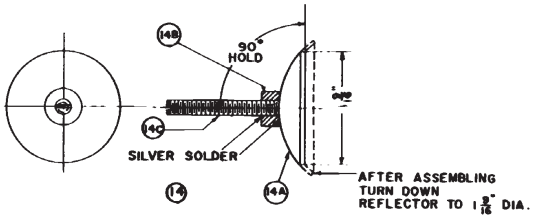

(14)
SPHERICAL REFLECTOR ASSEMBLY
REFLECTING SURFACE TO BE
VACUUM METALIZED ALUMINUM
FINISH: PRIME AND PAINT DULL BLACK
WITH EXCEPTION OF THREADS
AND REFLECTING SURFACE

SCALE
0 1 2 3 IN.

THIS SERIES SUPERSEDES D-4886 SERIES

REV. TR	DATE	DESCRIPTION	CHECKED	APPROVED
A	4-15-68	TITLE BLOCK REVISED	pce	

DEPARTMENT OF TRANSPORTATION
FEDERAL AVIATION ADMINISTRATION
WASHINGTON, D.C. 20590

DETAILS
FOR PORTABLE SIGNAL LIGHT GUN

TYPE W-1

REVIEWED BY
SUBMITTED BY I. L. LEDBETTER JR
APPROVED BY E. BROMLEY JR
CHIEF, TERMINAL SYSTEMS SECTION, ED-452
CHIEF, SUPPORT SYSTEMS BRANCH, ED-450
DETAILED BY pce
DRAWN BY
CHECKED BY
SYSTEMS RESEARCH AND DEVELOPMENT SERVICE
ENVIRONMENTAL DEVELOPMENT DIVISION
DATE - 4-15-68
DRAWING NO D-5056-10
REV LTR A

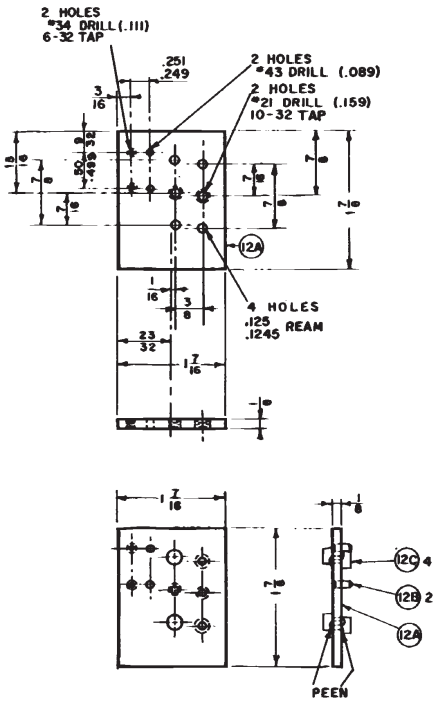

(12)
VERTICAL FOCUSING ADJUSTING PLATE COMPLETE
ALUMINUM

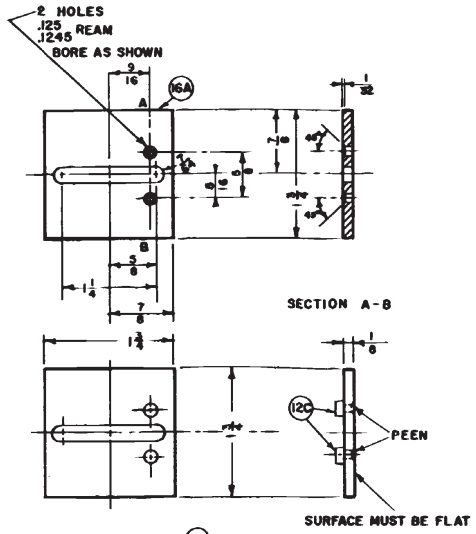

(16)
HORIZONTAL FOCUSING ADJUSTING PLATE COMPLETE
ALUMINUM

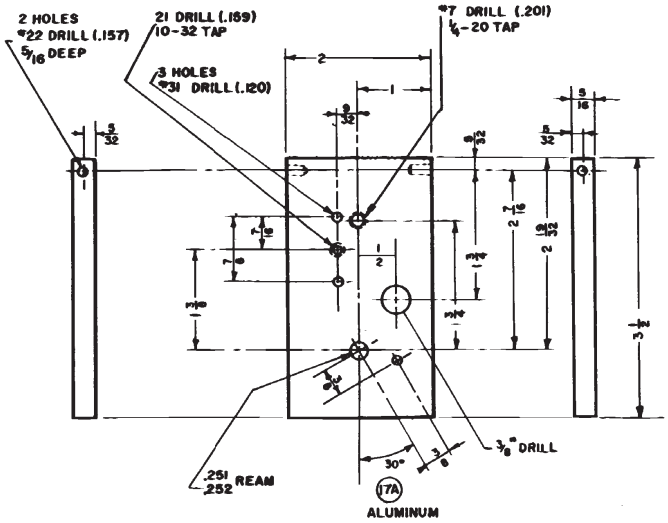

ALUMINUM

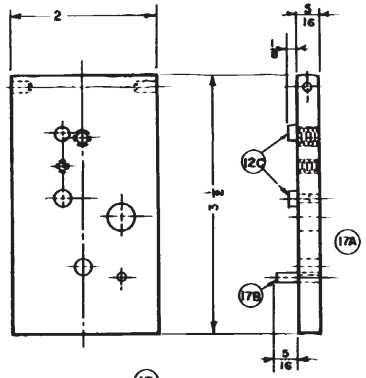

(17)
MOUNTING PLATE COMPLETE FOR FOCUSING MECHANISM

NOTE: ALL EXPOSED SURFACES SHALL BE PRIMED AND PAINTED DULL BLACK.

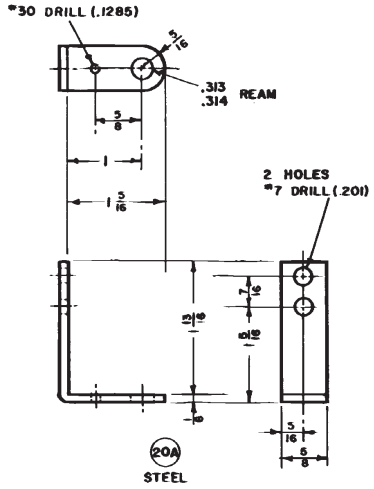

STEEL

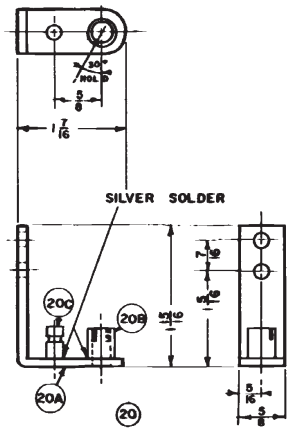

FILTER CHANGER SUPPORT COMPLETE

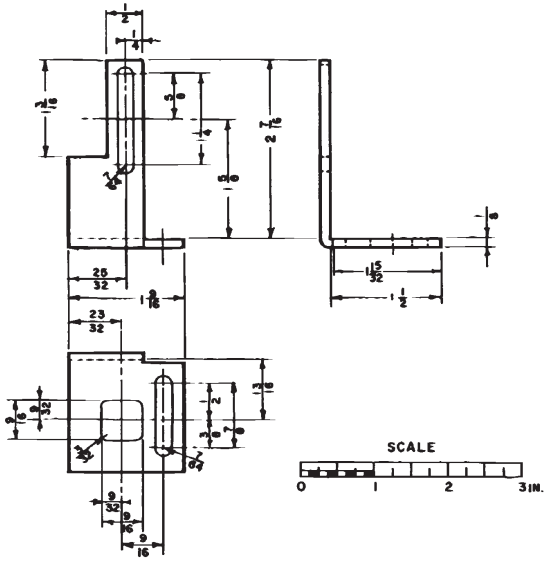

(11)
STEEL
ADJUSTABLE FOCUSING SUPPORT

THIS SERIES SUPERSEDES D-4886 SERIES

REV. LTR	DATE	DESCRIPTION	CHECKED	APPROVED
A		TITLE BLOCK REVISED	Pee	[illegible]

DEPARTMENT OF TRANSPORTATION
FEDERAL AVIATION ADMINISTRATION
WASHINGTON, D.C. 20590

DETAILS
FOR PORTABLE SIGNAL LIGHT GUN

TYPE W-1

REVIEWED BY
SUBMITTED BY: Isaac L. Ledbetter Jr. — I. L. LEDBETTER JR — CHIEF, TERMINAL SYSTEMS SECTION, RD-452
APPROVED BY: Edmund Bromley Jr. — E. BROMLEY JR — CHIEF, SUPPORT SYSTEMS BRANCH, RD-450
DESIGNED BY: Pee
DRAWN BY: [illegible]
CHECKED BY: [illegible]
ISSUED BY: SYSTEMS RESEARCH AND DEVELOPMENT SERVICE, ENVIRONMENTAL DEVELOPMENT DIVISION
DATE —
DRAWING NO. D-5056-9
REV. LTR A

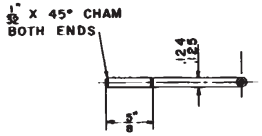

(17B)

STAINLESS STEEL

STOP PIN FOR COLOR SCREEN SUPPORT

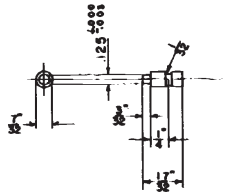

(20C)

BRASS

STOP PIN FOR COLOR SCREEN SPRING

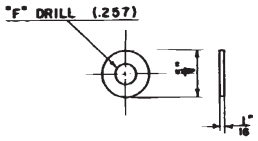

(39)

STAINLESS STEEL

WASHER FOR OPERATING SHAFT

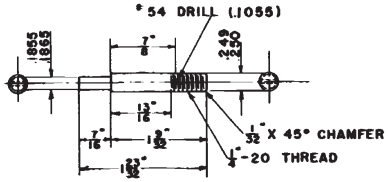

(21A)

STAINLESS STEEL

OPERATING SHAFT FOR COLOR SCREEN

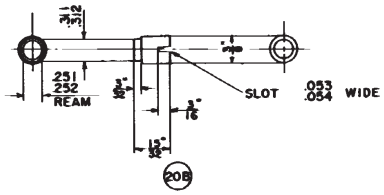

(20B)

STAINLESS STEEL

BUSHING FOR COLOR SCREEN SUPPORT

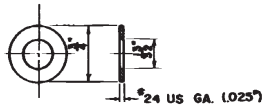

(26A)

BRASS CD. PLATED

COLOR SCREEN CHANGER SPRING RETAINING WASHER

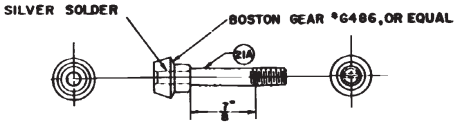

(21)

OPERATING SHAFT & GEAR FOR COLOR SCREENS

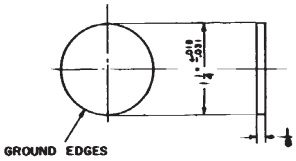

(23) COLOR SCREEN AVIATION RED

(24) COLOR SCREEN AVIATION GREEN

HEAT RESISTANT GLASS

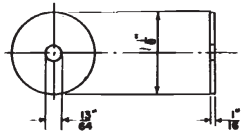

(19)

BRASS GALV.

CLAMPING WASHER FOR FOCUSING MECHANISM

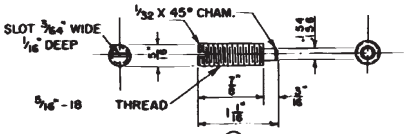

(18)

BRASS GALV.

HORIZONTAL ADJ. STUD FOR FOCUSING MECHANISM

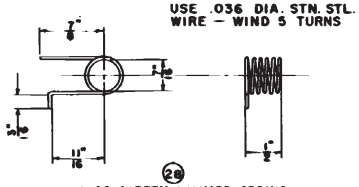

(26)

COLOR SCREEN CHANGER SPRING

(59)

BRASS WASHER FOR OPERATING SHAFT

SCALE

0 1 2 3 IN.

NOTE:
ALL EXPOSED SURFACES OF THE PARTS ON THIS DRAWING SHALL BE PRIMED AND PAINTED DULL BLACK WITH EXCEPTION OF SPRINGS, WASHERS, AND THREADS.

REV LTR	DATE	DESCRIPTION	CHECKED	APPROVED
A	4-15-68	TITLE BLOCK REVISED	TCC	

DEPARTMENT OF TRANSPORTATION
FEDERAL AVIATION ADMINISTRATION
WASHINGTON, D.C. 20590

DETAILS
FOR PORTABLE SIGNAL LIGHT GUN

TYPE W-1

SUBMITTED BY: J. L. LEDBETTER JR. — CHIEF, TERMINAL SYSTEMS SECTION, RD-462

APPROVED BY: Raymond Pronovost — CHIEF, SUPPORT SYSTEMS BRANCH, RD-460

DRAWN BY: TCC

ISSUED BY: SYSTEMS RESEARCH AND DEVELOPMENT SERVICE, ENGINEERING DEVELOPMENT DIVISION

DATE: 4-15-68

DRAWING NO. D-5056-8

REV. LTR. A

THIS SERIES SUPERSEDES D-4886 SERIES

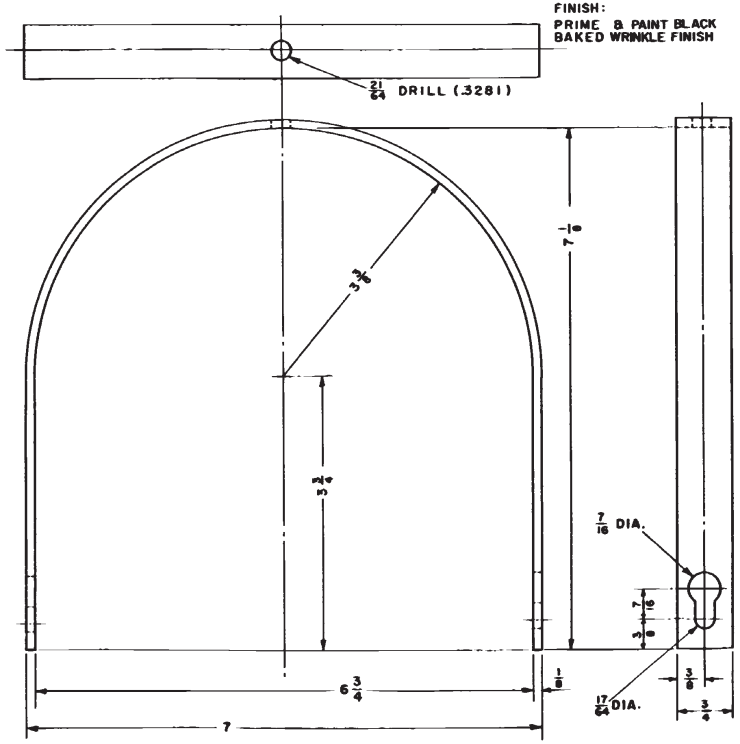

DEV. LENGTH APPROX. 18 3/8"

(46)

HANGER
1/8" STEEL

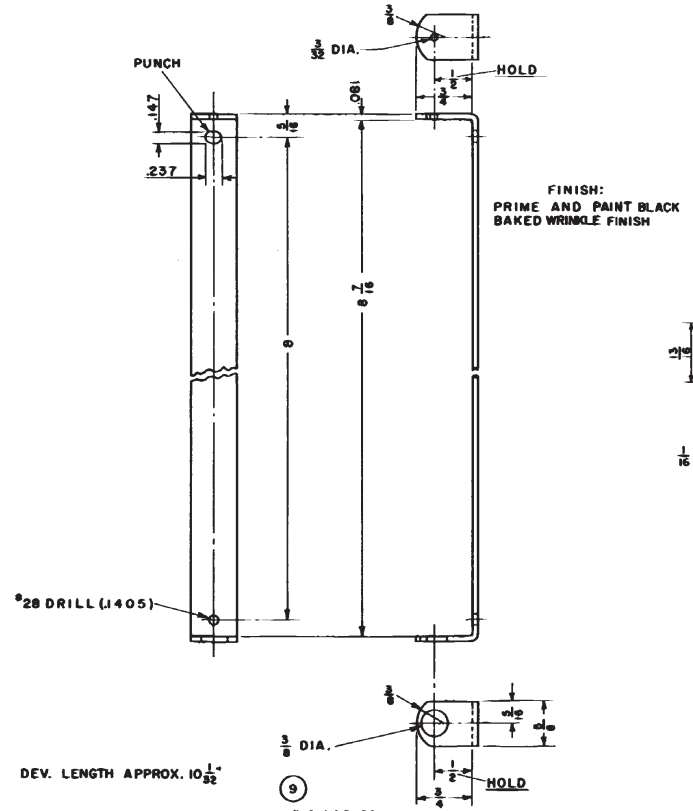

DEV. LENGTH APPROX. 10 1/32"

(9)

ALUMINUM #12 B&S GA.

SIGHT

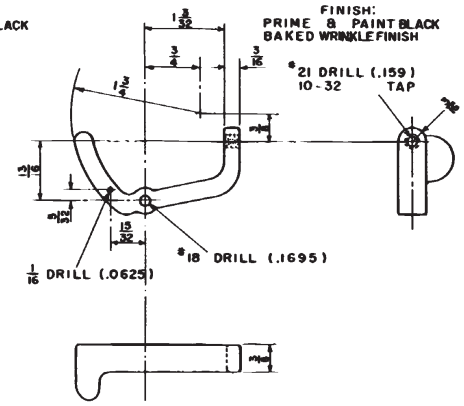

(33)

ALUMINUM CASTING

TRIGGER STOP

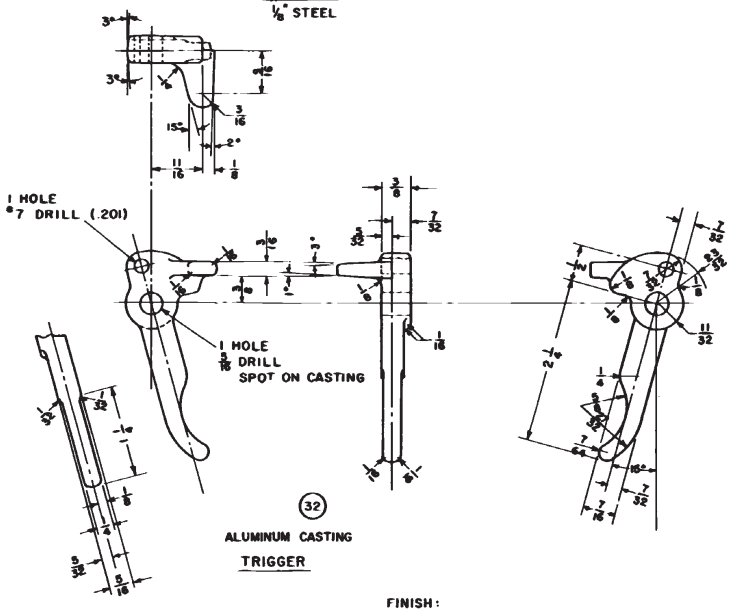

(32)

ALUMINUM CASTING

TRIGGER

FINISH:
PRIME & PAINT BLACK
BAKED WRINKLE FINISH

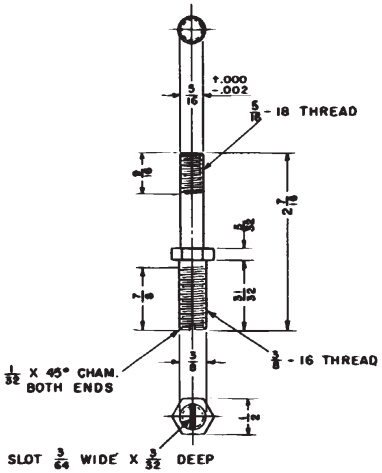

(31)

TRIGGER SHAFT

BRASS (GALV.)

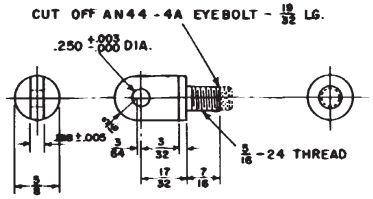

FINISH:
PRIME & PAINT
BLACK BAKED
WRINKLE FINISH

(46A)

HANGER BOLT

STEEL

FURNISH WITH 5/16"-24 STEEL HEX. NUT

SCALE

0 1 2 3 IN.

REV. LTR	DATE	DESCRIPTION	CHECKED	APPROVED
A	4-15-68	TITLE BLOCK REVISED	MCC	JCC

DEPARTMENT OF TRANSPORTATION

FEDERAL AVIATION ADMINISTRATION

WASHINGTON, D.C. 20590

DETAILS FOR PORTABLE SIGNAL LIGHT GUN

TYPE W-1

SUBMITTED BY: Isaac L. Lebritter Jr. — I.L. LEBRITTER JR. — CHIEF, TERMINAL SYSTEMS SECTION, RD-452

APPROVED BY: Edmund Bromley Jr. — E. BROMLEY JR. — CHIEF, SUPPORT SYSTEMS BRANCH, RD-450

DRAWN BY: MCC

DESIGNED BY: K. A. Ross

CHECKED BY: JCC/HOB

ISSUED BY: SYSTEMS RESEARCH AND DEVELOPMENT SERVICE, ENVIRONMENTAL DEVELOPMENT DIVISION

DATE - 4-15-68

DRAWING NO. D-5056-7

REV. LTR. A

THIS SERIES SUPERSEDES D-4886 SERIES

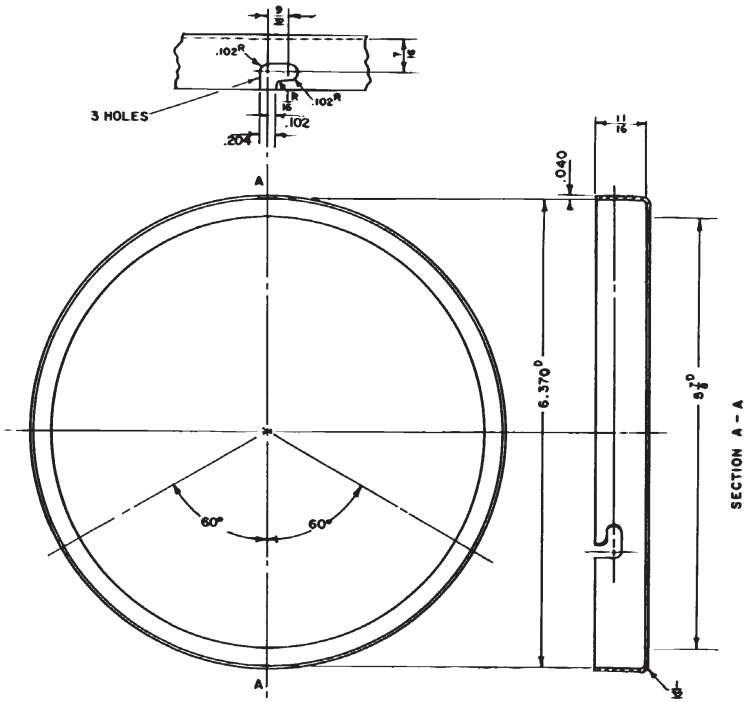

② COVER GLASS RETAINER
ALUMINUM
FINISH: PRIME & PAINT BLACK
BAKED WRINKLE FINISH

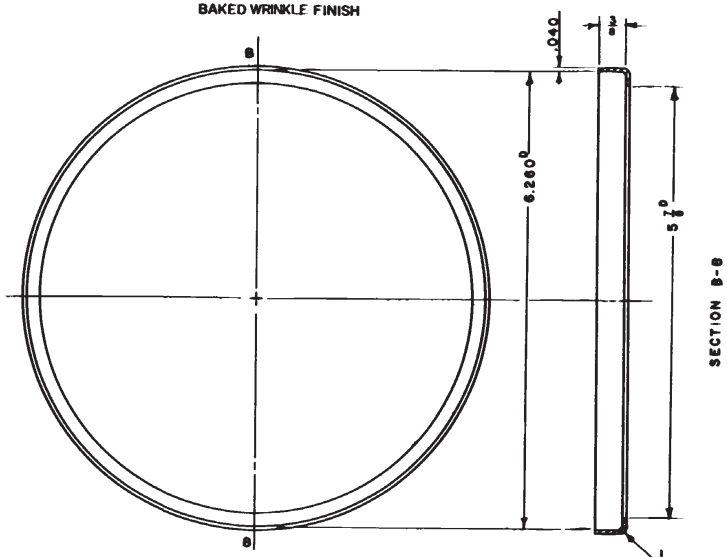

(1A) COVER GLASS SUPPORT
ALUMINUM
FINISH:
PRIME & PAINT DULL BLACK

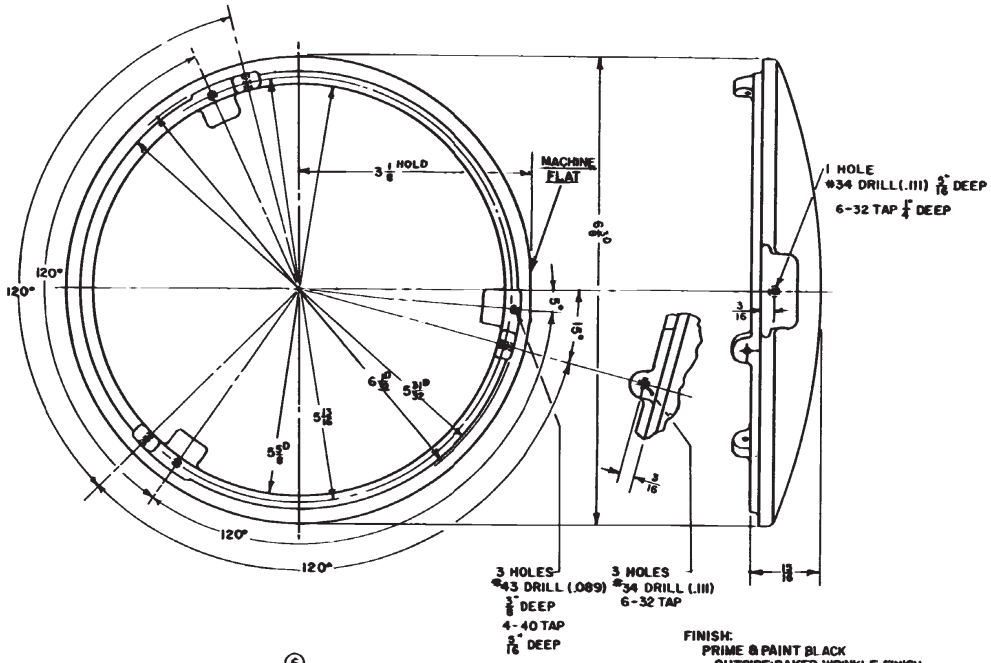

⑥ REFLECTOR SUPPORT
ALUMINUM
FINISH:
PRIME & PAINT BLACK
OUTSIDE: BAKED WRINKLE FINISH
INSIDE: BLACK DULL FINISH

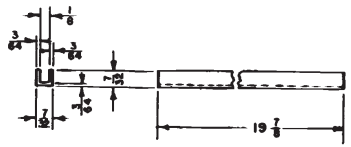

④ COVER GLASS GASKET RUBBER
ATLANTIC INDIA RUBBER WORKS SHAPE
NO. X693 OR EQUAL

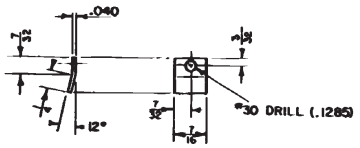

(8A) REFLECTOR CLIP
ALUMINUM
FINISH:
PRIME & PAINT
DULL BLACK

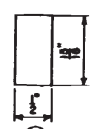

(8B) REFLECTOR PAD
1/32 FELT

SCALE
0 1 2 3 IN.

THIS SERIES SUPERSEDES D-4886 SERIES

REV. LTR	DATE	DESCRIPTION	CHECKED	APPROVED
A	4-15-68	TITLE BLOCK REVISED	PCC	[illegible]

DEPARTMENT OF TRANSPORTATION
FEDERAL AVIATION ADMINISTRATION
WASHINGTON, D.C. 20590

DETAILS
FOR PORTABLE SIGNAL LIGHT GUN

TYPE W-1

REVIEWED BY	SUBMITTED BY: Isaac L. Caddetta Jr. / I. L. LEDGETTER JR. CHIEF, TERMINAL SYSTEMS SECTION, RD-462	APPROVED BY: Edmund Bromley Jr. / E. BROMLEY JR. CHIEF, SUPPORT SYSTEMS BRANCH, RD-460
	PCC / DESIGN BY: [illegible] / CHECKED BY: [illegible]	SYSTEMS RESEARCH AND DEVELOPMENT SERVICE / ENVIRONMENTAL DEVELOPMENT DIVISION
	DATE - 4-15-68	REV. LTR. A
	D-5056-6	

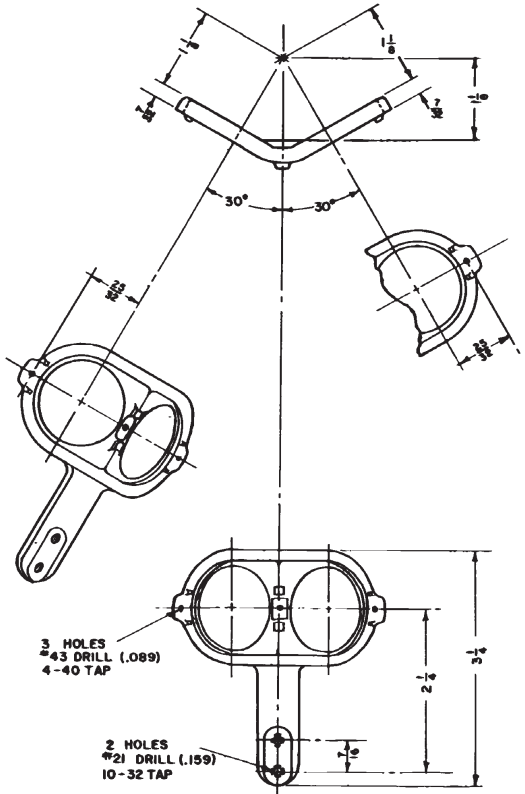

(27)
ALUMINUM CASTING
COLOR SCREEN HOLDER

FINISH: PRIME & PAINT DULL BLACK

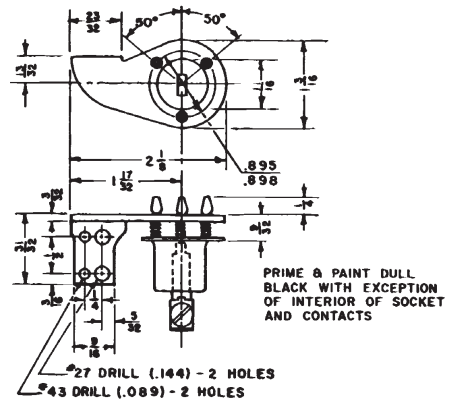

(10)
PREFOCUS BASE RECEPTACLE FOR USE WITH G.E. #1507 LAMP OR EQUAL

SIMILAR TO COLE HERSEE #2711 EXCEPT THREE HOLDING PINS ARE LOCATED 90° FROM STANDARD POSITION AND SOCKET BODY IS DEEPER TO ACCOMODATE GENERAL ELECTRIC #1507 LAMP.

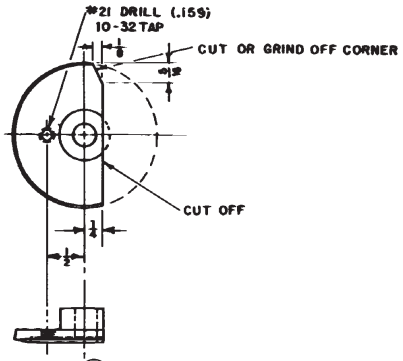

(22)
COLOR SCREEN BEVEL GEAR
BRASS (GALV.)

MAKE FROM: BOSTON GEAR #486, 2" P.D. 32P, 64T
1/4" FACE, 5/16" DIA. HOLE OR EQUAL.

FINISH: PRIME & PAINT DULL BLACK, WITH EXCEPTION OF TEETH

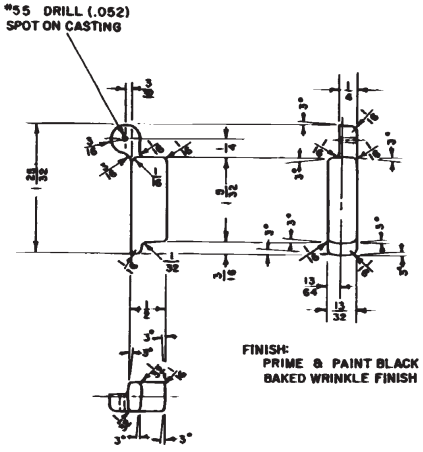

FINISH:
PRIME & PAINT BLACK
BAKED WRINKLE FINISH

(30)
CAST ALUMINUM
PUSH BUTTON

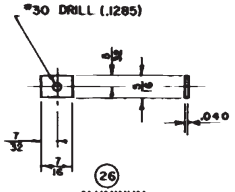

(26)
ALUMINUM
COLOR SCREEN CLIP

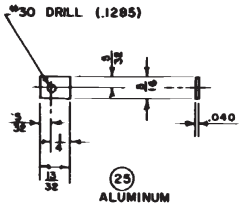

(25)
ALUMINUM
COLOR SCREEN CLIP

FINISH: PRIME & PAINT DULL BLACK

SCALE
0 1 2 3 IN.

THIS SERIES SUPERSEDES D-4886 SERIES

REV. LTR	DATE	DESCRIPTION	CHECKED	APPROVED
A	4-15-68	TITLE BLOCK REVISED		

DEPARTMENT OF TRANSPORTATION
FEDERAL AVIATION ADMINISTRATION
WASHINGTON, D.C. 20590

DETAILS
FOR PORTABLE SIGNAL LIGHT GUN

TYPE W-1

REVIEWED BY
SUBMITTED BY: I. L. LEDBETTER JR
CHIEF, TERMINAL SYSTEMS SECTION, RD-452
APPROVED BY: Edmund Bromley, E. BROMLEY JR
CHIEF, SUPPORT SYSTEMS BRANCH, RD-450
DRAWN BY: SYSTEMS RESEARCH AND DEVELOPMENT SERVICE
ENVIRONMENTAL DEVELOPMENT DIVISION
DATE 4-15-68
DRAWING NO. D-5065-5
REV. LTR A

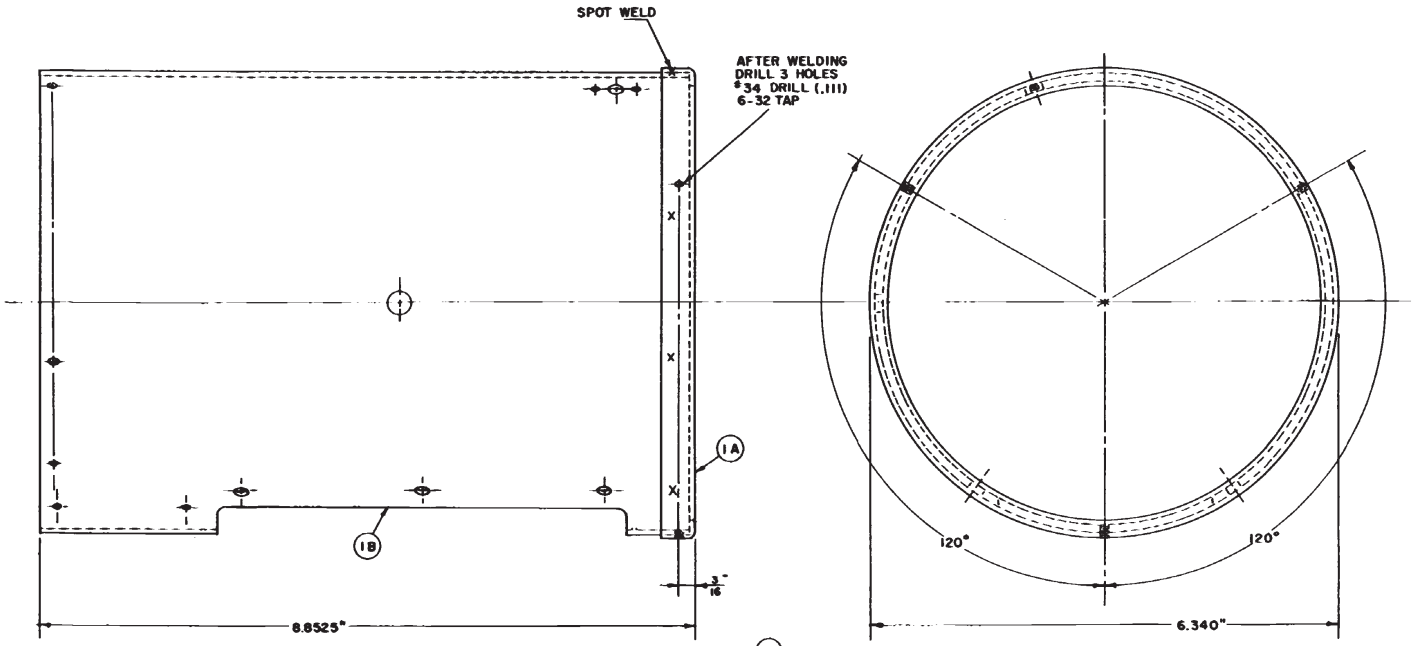

HOUSING ASSEMBLY

NOTE:
PRIME AND PAINT INSIDE AND ENDS FLAT BLACK.
OUTSIDE SURFACE TO BE BLACK BAKED WRINKLE FINISH.

SCALE
0 1 2 3 IN.

REV. LTR	DATE	DESCRIPTION	CHECKED	APPROVED
A	4-15-68	TITLE BLOCK REVISED;	PCC	[illegible]

DEPARTMENT OF TRANSPORTATION
FEDERAL AVIATION ADMINISTRATION
WASHINGTON, D.C. 20590

HOUSING ASSEMBLY
FOR PORTABLE SIGNAL LIGHT GUN

TYPE W-1

REVIEWED BY
SUBMITTED BY: T. L. LEBOETTER JR. — CHIEF, TERMINAL SYSTEMS SECTION, RD-482
APPROVED BY: Edmund Bromley Jr. — CHIEF, SUPPORT SYSTEMS BRANCH, RD-480
DESIGNED BY: PCC
DRAWN BY: [illegible]
CHECKED BY: [illegible]
ISSUED BY: SYSTEMS RESEARCH AND DEVELOPMENT SERVICE, ENVIRONMENTAL DEVELOPMENT DIVISION
DATE - 4-15-68
DRAWING NO. D-5056-4
REV. LTR. A

THIS SERIES SUPERSEDES D-4886 SERIES

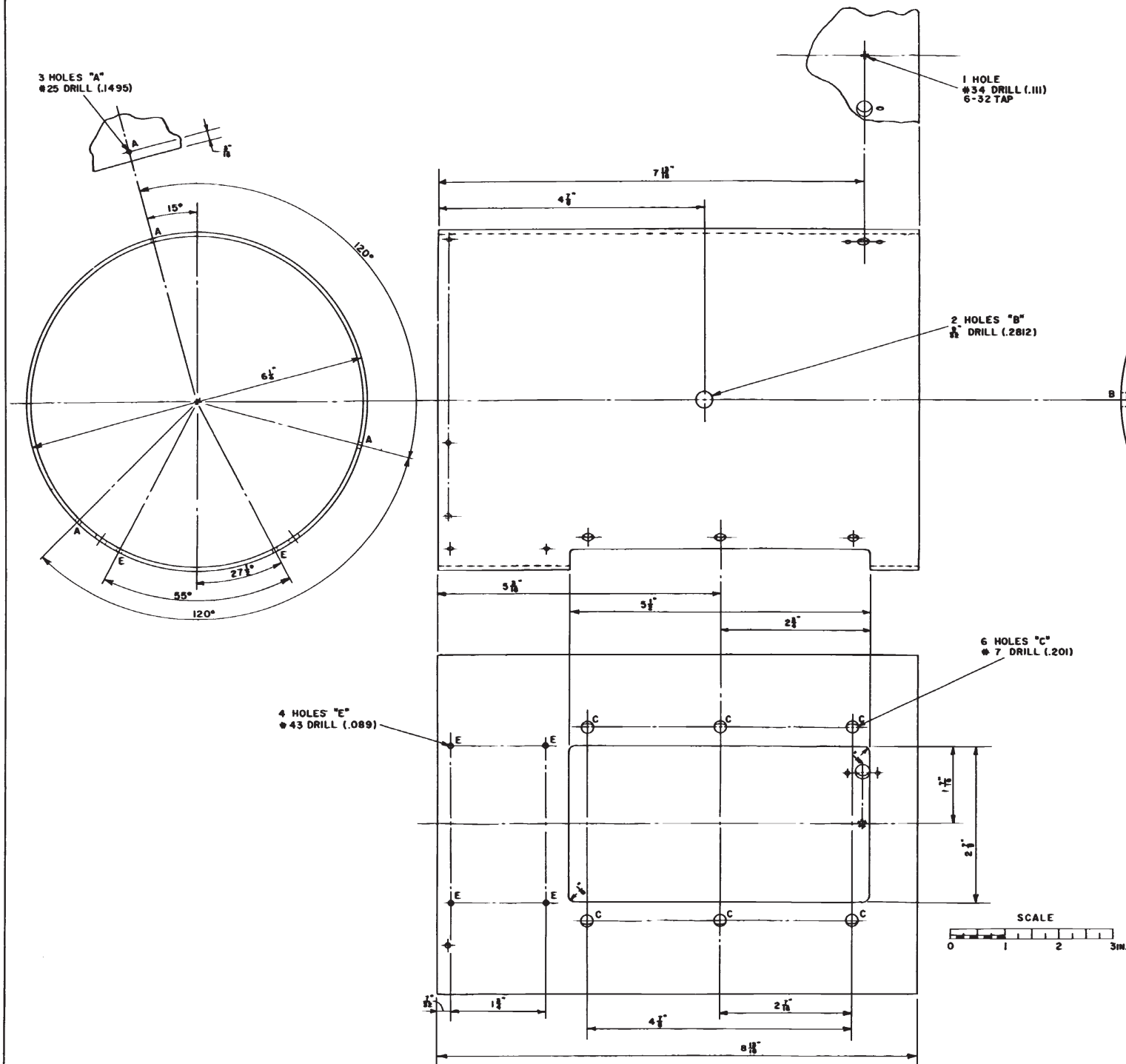

MATERIAL – ALUMINUM

REV.LTR	DATE	DESCRIPTION	CHECKED	APPROVED
A	4-15-68	TITLE BLOCK REVISED	PCC	JCC

DEPARTMENT OF TRANSPORTATION
FEDERAL AVIATION ADMINISTRATION
WASHINGTON, D.C. 20590

HOUSING
FOR PORTABLE SIGNAL LIGHT GUN

TYPE W-1

REVIEWED BY

SUBMITTED BY: Isaac P. Lefebvre Jr. — I.L. LEFEBVRE JR. — CHIEF, TERMINAL SYSTEMS SECTION, RD-462

APPROVED BY: Edmund Bromley Jr. — E. BROMLEY JR. — CHIEF, SUPPORT SYSTEMS BRANCH, RD-450

DESIGNED BY: PCC

DRAWN BY: Tom A. Brass

CHECKED BY: [illegible]

ISSUED BY: SYSTEMS RESEARCH AND DEVELOPMENT SERVICE — NONVENDEMENTAL DEVELOPMENT DIVISION

DATE – 4-15-68

DRAWING NO. D-5056-3

REV. LTR. A

(18)

THIS SERIES SUPERSEDES D-4886 SERIES

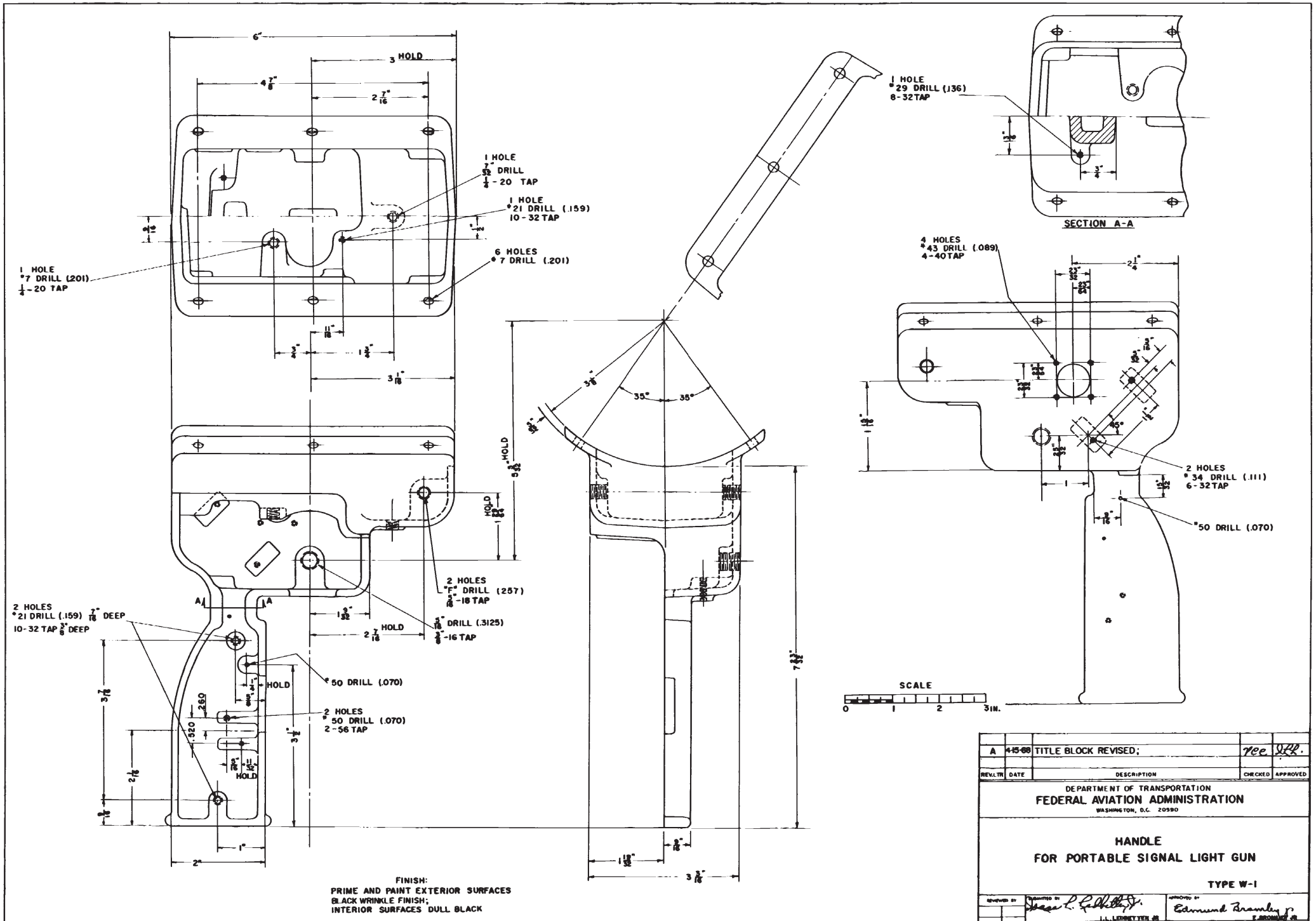

FINISH:
PRIME AND PAINT EXTERIOR SURFACES
BLACK WRINKLE FINISH;
INTERIOR SURFACES DULL BLACK

(40)
CAST ALUMINUM

THIS SERIES SUPERSEDES D-4886 SERIES

REV. LTR	DATE	DESCRIPTION	CHECKED	APPROVED
A	4-15-68	TITLE BLOCK REVISED;	vee	JLL

DEPARTMENT OF TRANSPORTATION
FEDERAL AVIATION ADMINISTRATION
WASHINGTON, D.C. 20590

HANDLE
FOR PORTABLE SIGNAL LIGHT GUN

TYPE W-1

REVIEWED BY
SUBMITTED BY: Isaac L. Gelbetter Jr. — I. L. LEDBETTER JR.
APPROVED BY: Edmund Bramley Jr. — E. BROMLEY JR.
CHIEF, TERMINAL SYSTEMS SECTION, RD-452
CHIEF, SUPPORT SYSTEMS BRANCH, RD-450
DESIGNED BY: vee
DRAWN BY: [illegible]
CHECKED BY: [illegible]
ISSUED BY: SYSTEMS RESEARCH AND DEVELOPMENT SERVICE, ENVIRONMENTAL DEVELOPMENT DIVISION
DATE: 4-15-68
DRAWING NO: D-5056-12
REV. LTR: A

26223

FAA-E-2214a
July 30, 1968
SUPERSEDING
FAA-E-2214
July 2, 1965

DEPARTMENT OF TRANSPORTATION
FEDERAL AVIATION ADMINISTRATION SPECIFICATION

GUN, SIGNAL LIGHT, PORTABLE

1. SCOPE

1.1 Scope.- This specification covers the requirements for a hand-held portable signal light gun to be used to provide a visual signal from the controller to the pilot.

2. APPLICABLE DOCUMENTS

2.1 FAA standard.- The following FAA standard of the issue specified in the invitation for bids or request for proposals forms a part of this specification and is applicable to the extent specified herein.

FAA-STD-012	Paint Systems for Equipment

2.2 Military and Federal publications.- The following Military and Federal publications, of the issue in effect on the date of the invitation for bids or requests for proposals, form a part of this specification and are applicable to the extent specified herein.

2.2.1 Military specifications.-

MIL-P-116	Preservation, Method of
MIL-C-7989	Covers, Light Transmitting for Aeronautical Lights, General Requirements For
MIL-C-25050 (ASG)	Colors, Aeronautical Lights and Lighting Equipment, General Requirement for

2.2.2 Military standard.-

MIL-STD-129	Marking for Shipment and Storage

2.2.3 Federal specifications.-

PPP-B-601	Boxes, Wood, Cleated Plywood
PPP-B-621	Boxes, Wood, Nailed and Lock-Corner
PPP-B-636	Box, Fiberboard
PPP-B-640	Boxes, Fiberboard, Corrugated, Triple Wall
PPP-C-843	Cushioning Material, Cellulosic
PPP-F-320	Fiberboard, Sheet Stock and Cut Shapes

2.2.4 Federal standards.-

Fed-Std-102	Preservation, Packaging and Packing Levels
Fed-Std-595	Colors

(Copies of this specification and FAA standard may be obtained from the Contracting Officer in the Federal Aviation Administration Office issuing the invitation for bids or request for proposals. Requests should fully identify material desired, i.e., specification and standard number and dates. Requests should cite the invitation for bids, requests for proposals, or the contract involved or other use to be made of the requested material.)

(Information on obtaining copies of Federal specifications and standards may be obtained from General Services Administration offices in Washington, D.C., Atlanta, Boston, Chicago, Dallas, Denver, Kansas City, Mo., Los Angeles, New York, San Francisco, and Seattle).

(Single copies of Military specifications and standards may be obtained from Federal Aviation Administration, Washington, D.C. 20590, ATTN: Contracting Officer. Requests should cite the invitation for bids, request for proposals, or contract for which the material is needed. Mail requests, if found acceptable, will be forwarded to a Military supply depot for filling; hence, ample time should be allowed.)

3. REQUIREMENTS

3.1 Equipment to be furnished by the contractor.- The portable signal light gun to be furnished under this specification shall be a one-hand operated unit to transmit either a green, red or white signal at the option of the controller. The gun shall be equipped with a socket and matching plug for connection of a light cord, and a hinged yoke for the connection of a supporting cable. A fused transformer with a socket and matching plug shall be provided on the output side, and three foot power cord and plug on the input side shall also be furnished. The supporting cable and the connecting cord between the transformer and gun will be furnished and installed by others.

3.2 Material.- The finished product shall be made of new material of the kind and grade specified herein and on the applicable drawings. Material not definitely specified shall be of a good commercial quality entirely suitable for the purpose.

3.3 Design.- The unit shall consist of a housing and handle containing an optical system, control switches, 12-14 volt lamp, sighting device and a 120/14 volt transformer. A microswitch in the handle shall energize the lamp circuit when it is depressed. The color of the signal beam shall be changed by movement of the trigger or lever. The light beam shall be aimed toward the aircraft or vehicle being signaled by means of the peep sight on top of the gun. The gun shall be connected to the transformer by means of a two conductor cable.

3.3.1 Housing.- The housing shall be in accordance with FAA drawing D-5056. The housing shall consist of a cylindrical tube to enclose the optical system and lamp bulb. The handle shall be balanced beneath the housing to facilitate one-hand operation. A microswitch to energize the lamp circuit shall be located in the handle. A trigger in the handle shall change the filter, and a lever to clear the filters shall be located beside the handle. A cover glass and gasket serves as a dust cover for the optical system. The glass shall be plate glass 6-1/4 inches in diameter and 1/8 inch thick. A yoke shall be provided on top for suspension of the gun.

3.3.1.1 Sight.- The centerline of the sight shall be parallel to the optical axis of the unit within an angular tolerance of 3 minutes. The rear mounting hole in the sight is slotted to allow for adjustment.

3.3.1.2 Color indicator.- The color indicator shall be of sufficient brightness so that an operator with normal vision in bright daylight can distinguish the color of the filter in use.

3.3.2 Optical System

3.3.2.1 Assembly.- The optical system shall consist of a principal reflector, auxiliary reflector, lamp, color filters, cover glass, a color indicator and sight. All parts of the optical system shall be properly adjusted and rigidly fastened by the manufacturer. Assembly shall be in accordance with the applicable drawings.

3.3.2.2 Principal reflector.- The principal reflector shall be a paraboloid of revolution having a 5-1/2 inch diameter and a 5-1/4 inch focal length. The reflector shall be glass and shall produce the required beam characteristics. The silver coating shall be protected by backing metal and paint coats.

3.3.2.3 Auxiliary reflector.- The auxiliary reflector shall be as described on the drawing. The center of curvature of the auxiliary reflector shall be on the optical axis. The auxiliary reflector shall be mounted to prevent emission of direct light from the housing.

3.3.2.4 Filters.- One filter shall be aviation red and the other aviation green in accordance with Specification MIL-C-7989 for Class "B" heat resisting glass. The color and transmission of the filters shall be in accordance with Specification MIL-C-25050 (ASG) for Type 1, Grade "B" colors.

3.3.3 Electrical.- The electrical system shall consist of the bulb and socket within the housing, a microswitch in the handle, and a connector socket on the housing; a matching angle plug shall be furnished with the gun. The transformer shall be designed for mounting on a plate.

3.3.3.1 Lamp.- The lamp shall be a 50-candle power, 12-14 V., RP-11 bulb, single contact prefocus base, American Standard Association Trade No. 1507, or equal.

3.3.3.2 Transformer.- The transformer shall be 100 VA, 120/14 volt rating, conforming to the requirements of NEMA Standard 45-98 for control transformers. The secondary leads of the transformer shall terminate in a male receptacle built in or fastened to the transformer case. A matching female plug shall be included for attaching to a 2/c #16 type "SJ" cord. Receptacle and plug shall be of the aircraft type with threaded locking device. The primary 120-volt leads shall terminate in a standard male plug on a 3-foot length of 2/c #14 rubber armored "hard service" Underwriters Laboratories type "S" cord. The transformer case shall have 4 holes for 1/4 inch bolts for mounting.

3.3.3.3 Fuse.- An enclosed fuse rated at 32-volt, 10-ampere, shall be provided in the transformer secondary circuit. The fuse shall be mounted in a panel mounted holder which is easily accessible from the outside of the transformer case.

3.3.3.4 Wiring.- Electrical wiring within the signal light gun shall terminate in a male receptacle as shown on the drawings. A matching female angle plug shall be furnished for attaching to a 2/c #16 type "SJ" cord. Receptacle and plug shall be of the aircraft type with threaded locking device. The 2/c #16 cord for connecting transformer to the housing will be furnished and installed by others.

3.4 Performance.- The gun shall be adjusted with the green filter in the normal position and the red filter in the alternate position. It shall be adjusted at the factory to meet the requirement of the following sub-paragraphs.

3.4.1 Candle Power distribution.- In any plane through the axis of the unit, the candle power of the clear beam in all directions making an angle less than 0.15° with the axis shall be not less than 150,000 candles, and in all directions making an angle greater than 1.0° with the axis, the candlepower shall be not more than 10,000 candles. In making these measurements the alignment of the sights shall be taken as establishing the axis of the unit, the measurements shall be made with a photometric distance of 100 feet (or 30 meters), and the lamps shall be operated at 14 volts or the results computed to that basis. The unit shall be focused at the factory for infinity and may be refocused in the laboratory if it is found to be improperly focused at the time the measurements are made.

3.5 Nameplate.- Each unit shall have a metal nameplate in accordance with Drawing B-21216. The title on the nameplate shall be "Signal Light Gun". The nameplate shall be riveted or screwed to the outside of the unit. The serial numbers will be assigned by the Federal Aviation Administration.

3.6 Finish.- The outside of the housing and the exterior metal surface shall be a matte finish black color 17038 of Fed-Std-595, and in accordance with FAA-Std- 012, system AS-1 or AS-2; screw threads shall be free of paint. The inside of the housing shall be a matte finish in black, color 37038.

4. QUALITY ASSURANCE PROVISIONS

4.1 General.- All inspections and tests specified herein shall be performed at the Contractor's plant (at one location in the continental United States). Unless otherwise specified, all tests shall be made by the Contractor and may be witnessed by an FAA representative. The Contractor shall make available for Government inspection each instrument to be delivered under the contract, if so requested by the Government. The Government reserves the right to waive witnessing any portion of the inspection; in lieu thereof, the Contractor shall furnish certified test data for each instrument showing compliance with the specification requirements.

4.2 Test methods.- At least 30 days before the date the equipment is scheduled to be tested, the Contractor shall submit to the Contracting Officer for approval three copies of a comprehensive outline, including tentative test data forms of methods and procedures he proposes to use in conducting the test(s) required. The procedures proposed shall be sufficiently comprehensive and detailed to assure that all the specification requirements are checked. The Government reserves the right to require any additional tests necessary to assure that all the specification requirements are checked.

4.3 Factory inspection and test.- Each equipment unit furnished under the contract shall be inspected and tested in accordance with the Government approved procedures to demonstrate compliance with all requirements.

4.4 Packaging tests.- Packaging tests shall be in accordance with Table III, Specification MIL-P-116, as applicable.

5. PREPARATION FOR DELIVERY

5.1 General.- The definitions and applications of the various levels of preservation packaging and packing shall be as specified in Fed.-Std-102.

5.2 Preservation and packaging.- Preservation and packaging shall be Level A or C as specified in the procurement document.

5.2.1 Level A

5.2.1.1 Cleaning.- The guns shall be cleaned in accordance with MIL-P-116, process C-1.

5.2.1.2 Drying.- The guns shall be dried in accordance with the provisions of MIL-P-116.

5.2.1.3 Unit packaging.- The gun shall be individually packaged Method III in accordance with the requirements of Specification MIL-P-116 and overpacked in a fiberboard container conforming to Specification PPP-B-636, Style RSC, Type CF and class weather resistant. Each gun shall be cushioned within the container by using die-cut pads conforming to Specification PPP-F-320. The cover glass of the light shall be protected by cushioning material conforming to Specification PPP-C-843. The transformer shall be packaged Method III wrapped, cushioned, and/or boxed in accordance with the general requirements of Specification MIL-P-116. The transformer shall then be placed within the light gun container but separated there from with fiberboard pads, die-cuts or sleeves, fabricated from Specification PPP-F-320 material.

5.2.2 Level C.- The guns shall be preserved and packaged in a manner that will afford adequate protection against corrosion, deterioration, and physical damage during shipment from supply source to the first receiving activity. This pack may conform to the supplier's commercial practice when it meets the requirements of this level.

5.3 Packing.- Packing shall be Level A or C as specified.

5.3.1 Level A.- The guns preserved and packaged in accordance with 5.2.1 or 5.2.2 shall be packed in overseas type exterior shipping containers conforming to Specification PPP-B-601, PPP-B-621, PPP-B-636, or PPP-B-640. As far as practical exterior containers shall be of uniform shape and size, be of minimum cube and tare consistent with the protection required, and shall contain identical quantities. Containers shall be closed in accordance with the applicable container specification or appendix thereto.

5.3.2 Level C.- The guns shall be packed in a manner that will assure safe transportation at the lowest rate to the point of delivery. Containers shall conform to uniform classification rules or regulations of common carriers applicable to the mode of transportation.

5.4 Marking.- In addition to any special marking required by the contract or order, each unit package, intermediate, and exterior shipping container shall be marked in accordance with the requirements of Standard MIL-STD-129.

6. NOTE

6.1 Ordering data.- Procurement documents should specify the levels of preservation, packaging and packing required and applicable marking (see Section 5).

ATTACH: Drawings D-5056 series (1 thru 12) Revision A
B-21216h

* * * * *