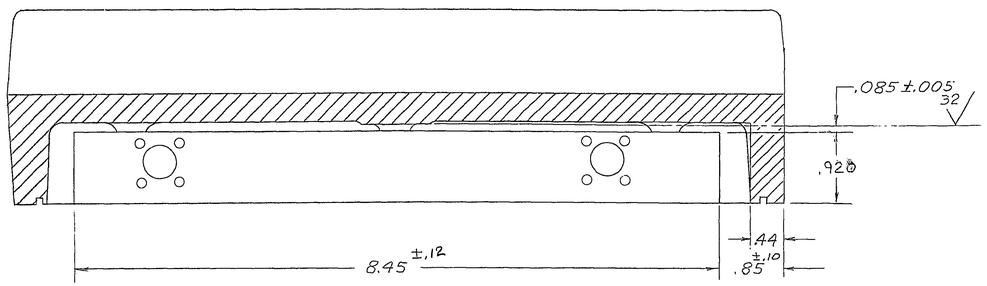

SECTION C-C

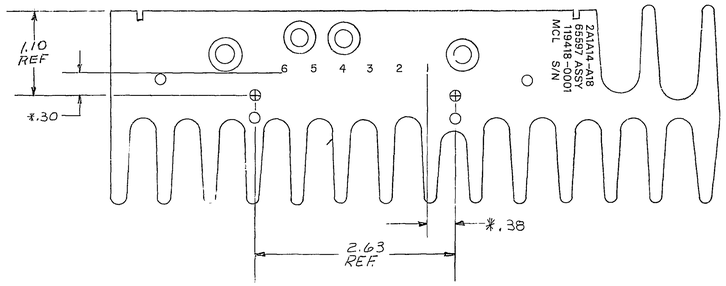

VIEW D-D
SCREENING LAYOUT

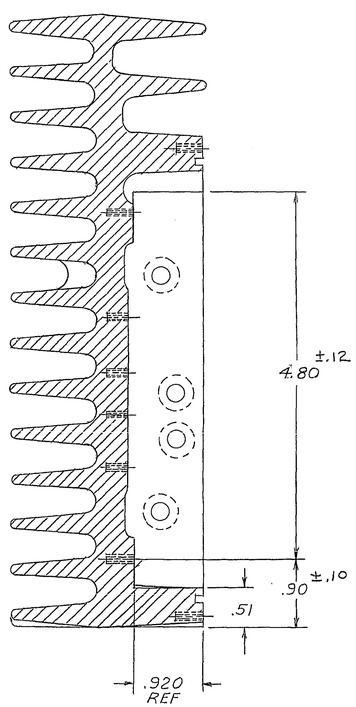

SECTION B-B

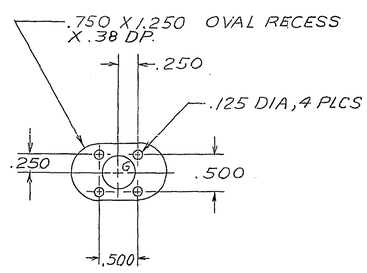

DETAIL "A"

HOLE LEGEND	
SYM	HOLE SIZE
A	DRILL .120 DIA., .374 MIN DP, C'SINK 120° ± 5° TO .14/.17 DIA. TAP FOR 4-40 (CLASS 2B) HELI-COIL INSERT .190 MIN FULL THREAD DEPTH. SEE NOTE 4 SHT 2.
B	TAP 4-40 UNC-2B X .25 DP MIN. (NOTE 7)
C	TAP 2-56 UNC-2B X .25 DP MIN. (NOTE 7)
D	TAP 6-32 UNC-2B X .25 DP MIN. (NOTE 7)
E	DRILL .201 DIA THROUGH ONE FIN. C'SINK 120° ± 5° TO .23/.26 DIA. TAP FOR 10-32 (CLASS 2B) HELI-COIL INSERT .220 MIN FULL THREAD DEPTH. SEE NOTE 9 SHT 2.
F	.221 DIA THRU C'BORE .437 X .36 DP.
G	.453 DIA SEE DETAIL "A"
H	SPOTFACE 1.00 X 3.00 OVAL, .050 DP. MAX.

NOTES;
1. SCREEN PER 10473004, METHOD 1, COLOR BLACK.
2. LAYOUT AND ARRANGEMENT CONTROLLED BY MASTER ARTWORK D281856MA SHT 1 OF 1
3. * - DIMS. SHOWN ARE FOR REGISTRATION OF SCREEN ON PART TOL. ± .03.

REVISIONS

ZONE	LTR.	DESCRIPTION	DATE	APPROVED
	A1	PRELIMINARY RELEASE PER CMCN 257	4/1/81	[illegible]
	A2	ADDED ARTWORK & SILKSCREEN STATUS ADDED SECTION D-D; HOLE LEGD: SYM B, C, D, & E REVISED HOLE SIZE DESC. TOP PICT - DELETED FINISH MARK (1) PLACE. PER CMCN 386. R.KEITH 6-18-81	6-18-81	J. Horak
	A3	REVISED SH. 2; NO CHANGE THIS SH. PER CMCN 716. R.KEITH 9-23-81	9-24-81	J. Horak
	A4	REVISED SH. 2; NO CHANGE THIS SH. PER CMCN 751. R.KEITH 10-8-81	10-9-81	J. Horak
	A5	OVAL RECESS WAS X .31 DP PER CMCN 818 M. L. 10-22-81	10-22-81	J. Horak
	A6	HOLE LEGEND - ADDED SYM H. PER CMCN 974. R.KEITH 11-18-81	11-18-81	J. Horak
	A7	HOLE LEGEND REVISED SYMBOLS A & E PER CMCN 1022 J.L.S. 12-2-81	12-3-81	J. Horak
	A8	HOLE LEG'D: REVISED SYM 'F'. PER CMCN 1104. M.GONZALES 12-15-81	12-16-81	J. Horak
	A9	REVISED SH. 2; NO CHANGE THIS SH. PER CMCN 1155. R.KEITH 1-11-82	1-12-82	J. Horak
	A10	PICT - VIEW D-D WAS: SECTION D-D; ADDED SCRNG, ZA1A14 ... SILKSCREEN STATUS VIEW D-D WAS SECTION D-D, REV. B WAS A. ARTWORK STATUS WAS REV A, 5-27-81 R.KEITH 1-25-82 PER CMCN 1209	1/26/82	[illegible]
	A11	REVISED SH. 1 & 2; NO CHANGE THIS SH. PER CMCN 1405 R.KEITH 3-23-82	3/23/82	[illegible]
	A12	HOLE LEGD SYM H WAS: SPOTFACE .75 X 2.80 OVAL ...; PER CMCN 1507. R.KEITH 4-21-82	4-23-82	[illegible]
	A13	REVISED SH. 1; NO CHANGE THIS SH. PER CMCN 1552. R.KEITH 5-11-82	[illegible]	[illegible]
	A13	PRELIM RELEASE PER ERF F3B	[illegible]	RK
	B	REVISED SH. 2; NO CHANGE THIS SH. PER ECN 39131. R.KEITH 8-4-82	8/6/82	[illegible]
	B	REVISED SH. 2; NO CHANGE THIS SH. PER PID 7034.. R KEITH 9-14-82	9-14-82	[illegible]
	C	REVISED SH. 2; NO CHANGE THIS SH. PER ECN 39482. R.KEITH 11-29-82	11/30/82	[illegible]
	D	HOLE LEGEND: SYM G WAS .437 DIA ... PER ECN 39961. R.KEITH 2-20-84	2/21/84	[illegible]

ARTWORK STATUS		
DWG SIZE	REV	DATE
D	A1	1-22-82

— SILKSCREEN REVISION STATUS									
DASH NO./VIEW/SHEET	SCREEN REVISION								
	A	B	C	D	E	F	G	H	
VIEW D-D	A	B							
	A								
	A								
	A								

PART NO. —//— SHOWN

WILCOX ELECTRIC PART NO.

DASH NO.	NO. REQ'D.	NEXT ASSY	USED ON
		SEE SH. 1	
		APPLICATION	

QUANTITY REQUIRED

ITEM NO.	PART OR IDENTIFYING NO.	NOMENCLATURE OR DESCRIPTION	MATERIAL OR NOTE	SPECIFICATION	CODE IDENT. NO.

LIST OF MATERIALS OR PARTS LIST

ALL DIMENSIONS ARE SHOWN IN INCHES. ALL DIMENSIONS APPLY AFTER FINISH. REMOVE ALL BURRS AND SHARP EDGES.

TOLERANCES UNLESS OTHERWISE SPECIFIED
2 DECIMAL .XX ± .02
3 DECIMAL .XXX ± .010
FORMED ANGLE ± 1.0°
HOLE DIAMETERS ± .005
MACH. SURFACES 125√

DRAWN BY	J.WILEY	4-1-81
DRAFTING APPROVAL	JLS	4-2-81
E.E. APPROVAL	J. Wenger	4-30-81
M.E. APPROVAL	J. Horak	4-30-81
COMP. APPROVAL	—//—	
COMP. MGMT.	R.Keith	7-21-82

CONTRACT NO. FA73 WA-4317

MATERIAL: —//—

FINISH: —//—

APPROVED

APPROVED

WILCOX ELECTRIC, INC. KANSAS CITY, MO. • U.S.A.
A Subsidiary of Northrop Corporation

ENCLOSURE, RF DRIVER AND POWER AMPLIFIER

SIZE	CODE IDENT. NO.	
D	65597	281856

SCALE 1/1 SHEET 3 OF 3