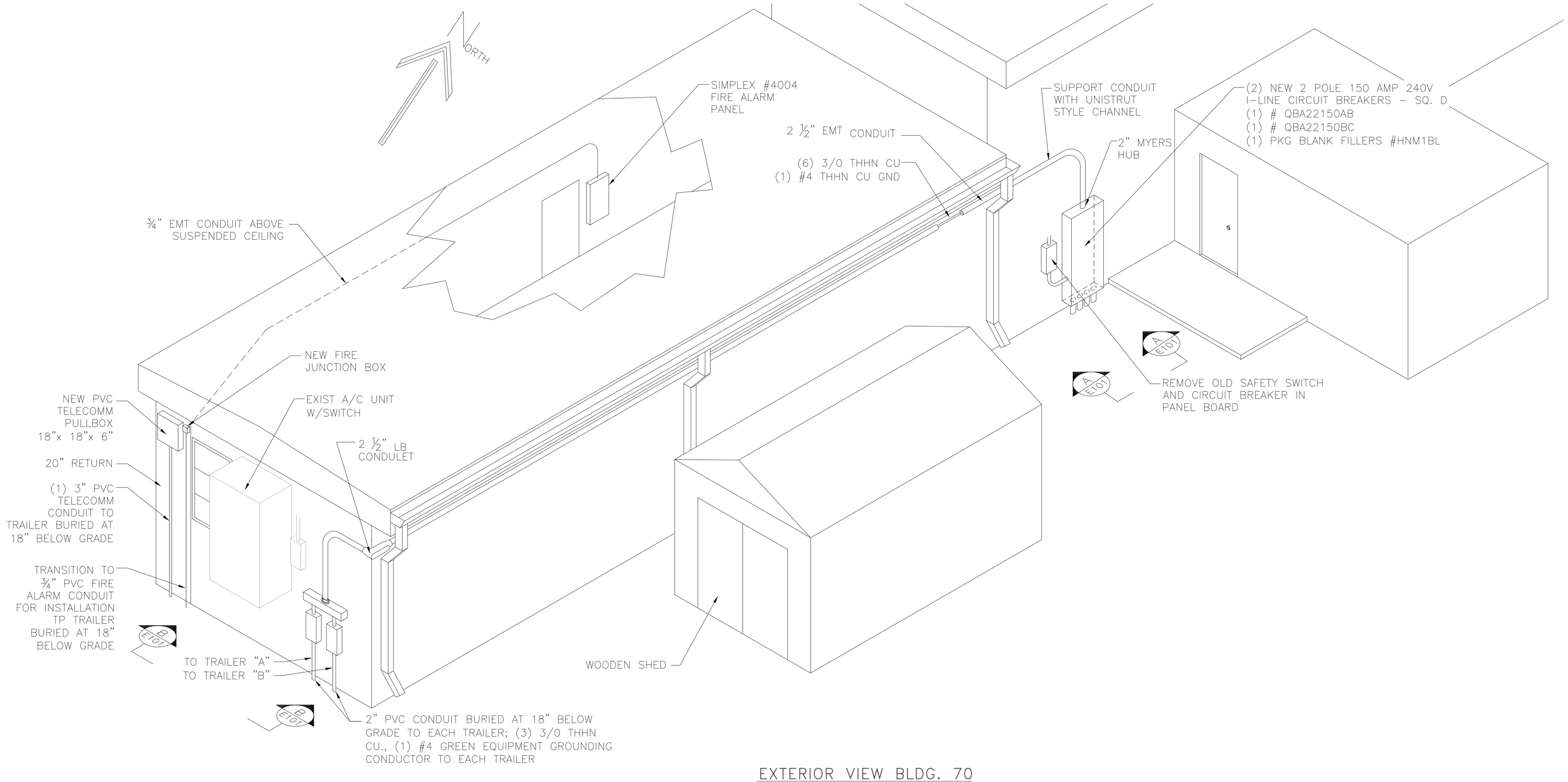

EXTERIOR VIEW BLDG. 70

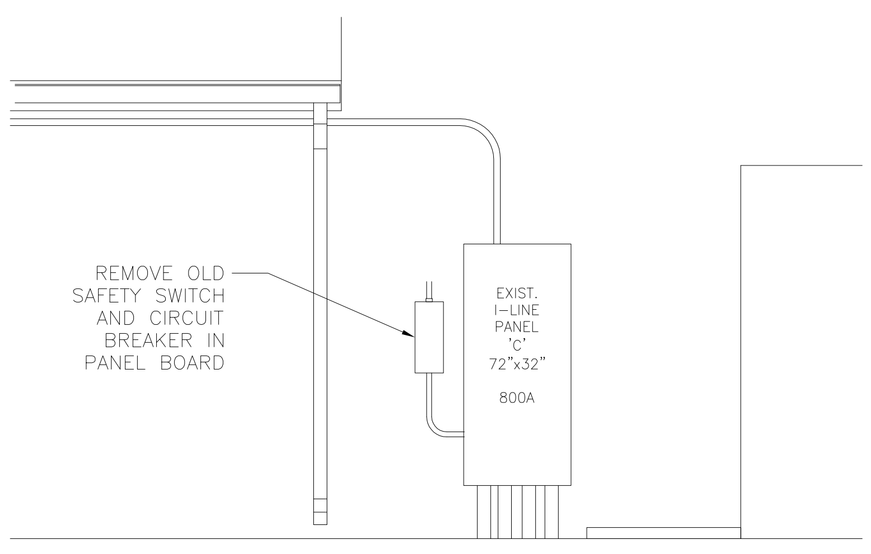

A-A E101 EAST ELEVATION
SCALE: NTS

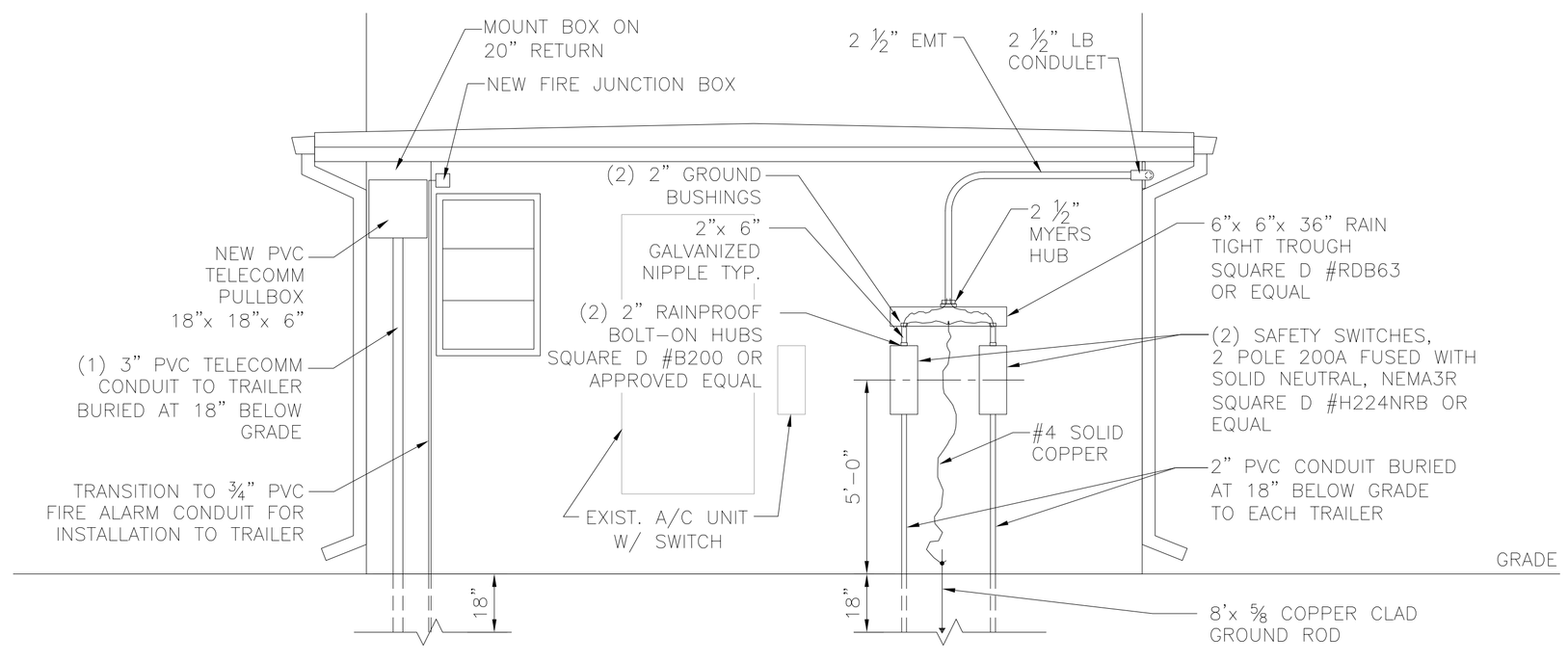

B-B E101 SOUTH ELEVATION
SCALE: NTS

REV	DATE	DESCRIPTION	CHECK	APRV'D

UNITED STATES DEPARTMENT OF TRANSPORTATION
FEDERAL AVIATION ADMINISTRATION
WILLIAM J. HUGHES TECHNICAL CENTER
ATLANTIC CITY INT'L AIRPORT, N.J. 08405

070

BUILDING 070 TRAILER

NEW 150 AMP ELECTRICAL SERVICE FOR (2) NEW TRAILERS

REVIEWED BY	SUBMITTED BY	DATE	APPROVED BY	DATE
	SUBMITTED BY: FRANK SEMAN		APPROVED BY: STEPHEN MALITSKY	
	DESIGN: PAUL HICKS	ISSUED BY: FACILITY SERVICES & ENGINEERING DIVISION	DATE: 10.12.11	JCN:
	DRAWN: FOSTER J		DRAWING NO. 2275321-E101	SHEET # 5 OF 9
	CHECK: PAUL HICKS			