POWER DISTRIBUTION UNIT
TABLE OF CONTENTS

DRAWING NAME:	DRAWING NUMBER:	TOTAL PAGES:
BILL OF MATERIALS:	LRR-000067-0002	3
PDU CHASSIS:	LRR-000067-0003	24
	LRR-001118-0201	1
CABLES/HARNESSES:		
PARTS	LRR-000067-0004	1
CABLE	LRR-000067-0005	1
CABLE	LRR-000067-0006	1
HARNESS	LRR-000067-0007	1
HARNESS	LRR-000067-0008	1
HARNESS	LRR-000067-0009	1
HARNESS	LRR-000067-0010	1
HARNESS	LRR-000067-0011	1
HARNESS	LRR-000067-0012	1
HARNESS	LRR-000067-0013	1
WIRES	LRR-000067-0014	1
WIRES	LRR-000067-0015	1
WIRES	LRR-000067-0016	2
WIRES	LRR-000067-0017	1
CIRCUIT BOARDS:	LRR-000067-0018	3
	AE-B-2044	3
ASSEMBLY/WIRE ROUTING NOTES:	LRR-000067-0019	1
	LRR-000067-0020	1
	LRR-000067-0021	1
	LRR-000067-0022	1
	LRR-000067-0023	1
ASSEMBLY PROCEDURES	LRR-000067-0024	1
TEST AND CHECKOUT PROCEDURES	LRR-000067-0025	3
TEST TABLES	LRR-000067-0026	1
PSM/PS FUNCTIONAL TEST	LRR-000067-0028	7

POWER DISTRIBUTION UNIT
TABLE OF CONTENTS

LRR-000067-0001

Item	QTY	Name	Manufacturer	Part Number
1	228	Brady Labels, 125-175 Dimension, Yellow	Brady	PSPT-125-175YL
2	4	Brady Labels, 375-175 Dimension, Yellow	Brady	PSPT-375-175YL
3	20"	Cable, 7 Conductor, 24AWG, Quad Shield	Belden	9932
4	1	Connector, Circular, Electroless Nickel Finish, Female Box Mount Receptacle		D38999/20FD18SN
5	1	Connector, Circular, Electroless Nickel Finish, Female Box Mount Receptacle		D38999/20FD19SN
6	1	Connector, Circular, Electroless Nickel Finish, Female Box Mount Receptacle		D38999/20FD97SN
7	1	Connector, Circular, Electroless Nickel Finish, Male Box Mount Receptacle		D38999/20FD18PN
8	1	Connector, DB15, Electric, Rectangular, Female Receptacle		M24308/2-2F
9	1	Connector, DB-9, Electric, Rectangular, Female Receptacle		M24308/2-1F
10	9	Contact, Electrical Connector, Pin, Crimp Removeable, 20AWG Wire		M39029/58-363
11	23	Contact, Electrical Connector, Socket, Crimp Removeable, 20AWG Wire		M39029/58-351
12	8	Crimp Terminal, 22-24AWG	Molex	90119-2109
13	14	Contact, Electrical Connector, Socket, Crimp Removeable, 20AWG Wire		M39029/63-368
14	8	Crimp Terminal, 22-24AWG	Hirose	DF11-22SC
15	2	Housing, 10 Conductor Connector, 2mm Dual Crimp	Hirose	DF11-10DS-2C
16	2	Housing, 8 Conductor Connector, 0.1"	Molex	90142-0008
17	1	Housing, 4 Position, 0.100" Pitch	Molex	90156-0144
18	1	Knob, Dial Style, Pointer Bar Skirted	Grayhill	11K5025-KMNB
19	10	Quick Connect, Female, Insulated, Nylon, 14AWG - 16AWG, Blue	Thomas & Betts	14RB-2577
20	2	Quick Connect, Female, Insulated, Nylon, 16AWG - 22AWG, Red	Thomas & Betts	18RA-2577
21	2	Quick Connect, Male, Insulated, Nylon, 16AWG - 22AWG, Red	Thomas & Betts	18RA-251T
22	8	Ring Terminal, Insulated, Nylon, 14AWG - 16AWG, Blue, #10 Stud	Thomas & Betts	RB14-10
23	20	Ring Terminal, Insulated, Nylon, 14AWG - 16AWG, Blue, #4 Stud	Thomas & Betts	RB14-4
24	47	Ring Terminal, Insulated, Nylon, 14AWG - 16AWG, Blue, #6 Stud	Thomas & Betts	RB14-6
25	1	Ring Terminal, Insulated, Nylon, 14AWG - 16AWG, Blue, 1/4" Stud	Thomas & Betts	RB14-14
26	100	Ring Terminal, Insulated, Nylon, 16AWG - 22AWG, Red, #6 Stud	Thomas & Betts	RA18-6
27	2	RJ45 Plug, VPI - CAT6 Shielded, Solid	VPI	6-PLG-SOLID-SH
28	2	RJ45 Protective Boot, Black	BlackBox	FMT710
29	1	Rotary Switch	Grayhill	44A30-02-3-03N
30	9"	VPI - CAT6 Cable, Solid Conductors, Twisted Pair, Shielded, Gray	VPI	CAT6-BULK-STP-SOL-GRAY
31	49"	Wire, Hook-Up, MIL-W-16878E, 14AWG, Stranded, TFE Jacket, Black	Alphawire	5859-2
32	111.5"	Wire, Hook-Up, MIL-W-16878E, 14AWG, Stranded, TFE Jacket, Green	Alphawire	5859-4
33	713.75"	Wire, Hook-Up, MIL-W-16878E, 14AWG, Stranded, TFE Jacket, White	Alphawire	5859-1
34	1446.5"	Wire, Hook-Up, MIL-W-16878E, 20AWG, Stranded, TFE Jacket, White	Alphawire	5856-1
35	1851"	Wire, Hook-Up, MIL-W-16878E, 22AWG, Stranded, TFE Jacket, White	Alphawire	5855-1

REV	DESCRIPTION	DATE	APPROVED
1	[illegible]		

DIMENSIONS - INCHES

FEDERAL AVIATION ADMINISTRATION
6500 S. MACARTHUR BLVD - BLDG 581
OKLAHOMA CITY, OK 73169

POWER DISTRIBUTION UNIT

TOTAL BILL OF MATERIALS

CYORS 05/28/2008

D | LRR-000067-0002 | A

SHEET 1 OF 3

Item	QTY	Name	Manufacturer	Part Number
35	21	#10-32 x 0.50 Clinch Stud	Penn Engineering	FHS-032-8
36	21	#10-32 SS Hex Nut		
37	32	#4 Flat Washers		
38	16	#4 SS Narrow Flat Washer		
39	40	#4 SS Split Washer		
40	32	#4-40 Nuts, Stainless Steel		
41	32	#4-40 Screws, 3/4", Pan-Head Phillips, Stainless Steel		
42	12	#4-40 SS Hex Nut		
43	4	#4-40 x 0.25 in Slotted Flat Countersunk Screw		
44	28	#4-40 x 0.25 in SS Phillips Panhead Screw		
45	4	#4-40 x 0.375 Jack Screw		
46	4	#4-40 x 0.50 Standoff	Penn Engineering	BS04-440-16
47	32	#4-40 x 0.625 in SS Phillips Panhead Screw		
48	20	#4-40 x 0.625 Standoff	Penn Engineering	BS04-440-20
49	4	#6 SS Flat Washer		
50	4	#6 SS Split Washer		
51	42	#6-32 Clinch Nut	Penn Engineering	CLS-632-2
52	4	#6-32 SS Hex Nut		
53	40	#6-32 x 0.375 in Slotted Flat Countersunk Screw		
54	4	#6-32 x 0.375 Thru Standoff	Penn Engineering	S04-632-12
55	2	#6-32 x 0.50 in SS Phillips Panhead Screw		
56	4	#6-32 x 1.0 in SS Phillips Panhead Screw		
57	8	#8-32 x 0.375 in Slotted Flat Countersunk Screw		
58	1	0.25-20 x 0.50 High Strength Stud	Penn Engineering	HFH-0420-8-Zi
59	2	0.25-20 x 0.75 Clinch Stud	Penn Engineering	FHS-0420-12
60	2	0.25-20 SS Flat Washer		
61	2	0.25-20 SS Hex Nut		
62	1	J10 Cover		
63	1	J11 Cover		
64	1	PDU Chassis - Back, 0.125 ALUMINUM 5052-H34		
65	1	PDU Chassis - Base, 0.125 ALUMINUM 5052-H34		
66	1	PDU Chassis - Cover, 0.125 ALUMINUM 5052-H34		
67	1	PDU Chassis - Front, 0.125 ALUMINUM 5052-H34		
68	1	PDU Chassis - Left Side, 0.125 ALUMINUM 5052-H34		
69	1	PDU Chassis - Right Side, 0.125 ALUMINUM 5052-H34		
70	1	PDU Chassis - Mounting Plate, 0.125 ALUMINUM 5052-H34		
71	17	Self Clinching Cable Tie	Penn Engineering	TD-175-12-Zi

FEDERAL AVIATION ADMINISTRATION

POWER DISTRIBUTION UNIT

TOTAL BILL OF MATERIALS

D LRR-000067-0002 A

Item	QTY	Name	Manufacturer	Part Number	Category
72	1	12 Position Terminal Block		670A GP 12	Part
73	2	Astec 1100W iMP4 Power Supply	ASTEC	iMP4-1E0-1Q0-4LL0-4LL0-4NN0-00-A	Part
74	7	BGA Heatsink, 28mm, Omindirectional	Wakefield	658-60ABT3	Part
75	7	Bridge Rectifier, 35A	Fairchild Semiconductor	GBPC3506W	Part
76	1	EMI Muffin Fan Filter	Tech-Etch	8205-5005-0413-MOD	Part
77	2	IEC Input Filter	Schaffner	FN9222R-15-06	Part
78	6	Miniature Meter	Red Lion	CUB4V020	Part
79	1	Muffin Fan	Delta	AFB1224HE	Part
80	1	Nameplate (FAA-G-2100G, Section 3.3.3.1)			
81	1	RJ-45 Coupler - LCOM	L-COM	ECF504-SC3	Part
82	16	Terminal Block, 10 Pos., 0.375" Spacing	Molex	38720-6210	Part
83	2	Toggle Switch	Carling Technologies	CA201-73	Part
84	1	TVS Diode, Vbr 10V	ON Semiconductor	1N6271AG	Part
85	3	TVS Diode, Vbr 27V	ON Semiconductor	1N6281AG	Part
86	2	TVS Diode, Vbr 33V	ON Semiconductor	1N6283AG	Part
87	1	TVS Diode, Vbr 51V	ON Semiconductor	1N6288AG	Part
88	2	Banana Jack - Insulated Solder Terminal - Yellow	Johnson Components	108-0907-001	Part/Harness
89	2	Locking Ring	Carling Technologies	728-15946	
90	17	Zip Tie	Thomas & Betts	L-7-50-9-C	
91	21	Zip Tie	Thomas & Betts	L-7-50MH-9	
92	3	Terminal Block Jumper	Marathon	J600	
93	1	DB Connector, Female, 15 Socket		M24308/2-2F	

NOTE:

FOR ITEM 73, UNITS MUST BE ORDERED AND RECEIVED ACCORDING TO THIS PART #. IF INDIVIDUAL POWER MODULES ARE NOT IN THE CORRECT ORDER, THE WIRE HARNESS WILL NOT TERMINATE CORRECTLY.

DIMENSIONS - INCHES

FEDERAL AVIATION ADMINISTRATION

POWER DISTRIBUTION UNIT

TOTAL BILL OF MATERIALS

D | LRR-000067-0002 | A

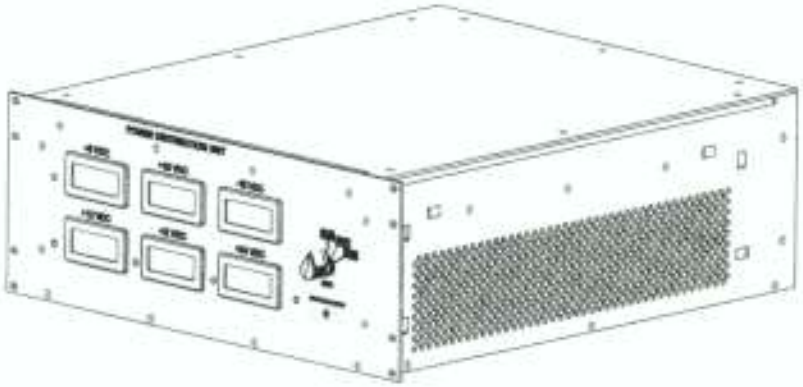

3-EXPLICIT

ITEM	QTY	PART NUMBER	MANUFACTURER	PART #	MATERIAL
[illegible]	[illegible]	[illegible]	[illegible]	[illegible]	[illegible]

NOTES:
MATERIAL 0.125" 5052-H34 ALUMINUM
BEND RADII AS SMALL AS POSSIBLE WITHOUT DAMAGING MATERIAL (MAX R0.125")
REMOVE ALL SHARP CORNERS
DEBURR ALL EDGES
CLEAN AND POLISH USING TIMESAVER ETCH
FINISH USING M-81706-2B2C (YELLOW CHROMATE CONVERSION (ALODINE))
IN ACCORDANCE WITH MIL-DTL-81706B.
POWDER COAT OUTSIDE FRONT FACE USING:
PROTECH POWDER PAINT
847-765-0200
www.PROTECHPOWDER.COM
COLOR CODE: PS311H242
#000087-6
SILK-SCREEN ACCORDING TO SHEET 11-16
SILKSCREEN (COLOR) SOLID BLACK
FILL IN ALL LINES & TEXT TO FORM SOLID ARTWORK
FAA WILL PROVIDE ARTWORK FOR SILK-SCREEN (SHEETS 11-16).
THE ITEM SHOWN IN THE ASSEMBLY DRAWING WILL BE INSTALLED BY THE FAA.
CONTRACTOR WILL BE RESPONSIBLE FOR PROVIDING AND INSTALLING IDENTIFICATION
LABEL AS SET FORTH IN THE FAA-G-2100G, FORM 36, "BASIC DESIGN".
-THE LABEL WILL BE LOCATED ON THE OUTSIDE OF THE LEFT SIDE PANEL.
-THE FAA WILL SPECIFY THE SERIAL NUMBERS TO USE.
-ALL APPROPRIATE CONTRACTOR INFORMATION IS TO BE USED.

REVISIONS				
DESCRIPTION	ZONE	PART OR REFERENCE DESIGNATION	AUTHORITY	DATE

CONTRACT NO.

APPROVALS | DATE

DRAWN: D. COLANGO | 11-14-06

FEDERAL AVIATION ADMINISTRATION
6500 S. MACARTHUR BLVD.
OKLAHOMA CITY, OK 73169

TITLE: POWER DISTRIBUTION UNIT
BILL OF MATERIALS

SIZE: D | DWG NO: LRR-000087-0002

SCALE: 1:1 | SHEET 1 OF 24

111-EXPLICIT

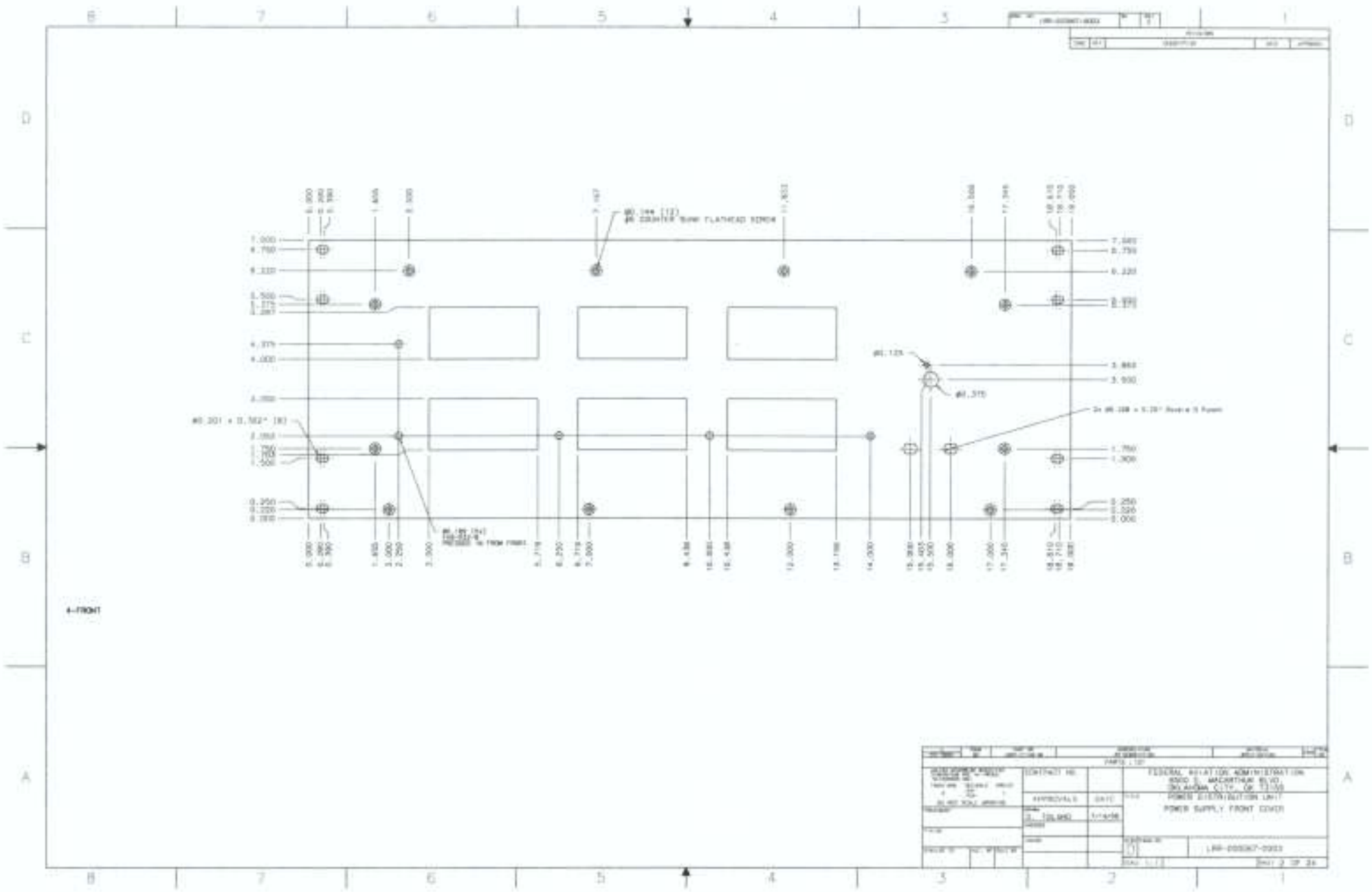

4-FRONT
FEDERAL AVIATION ADMINISTRATION
POWER DISTRIBUTION UNIT
POWER SUPPLY FRONT COVER

17.000
16.000
15.000
14.750
14.500
14.000
12.750
12.250
11.750
10.750
10.000
9.625
9.500
8.250
7.750
6.750
5.500
6.000
5.000
4.750
3.250
2.750
2.250
1.010
1.000
0.000
S-FRONT
FEDERAL AVIATION ADMINISTRATION
5500 S. MACARTHUR BLVD.
OKLAHOMA CITY, OK 73169
POWER DISTRIBUTION UNIT
POWER SUPPLY BASE
APPROVALS
DATE
D. TOLAND
LRR-000007-0003

8A-FRONT VIEW

8-BACK VIEW

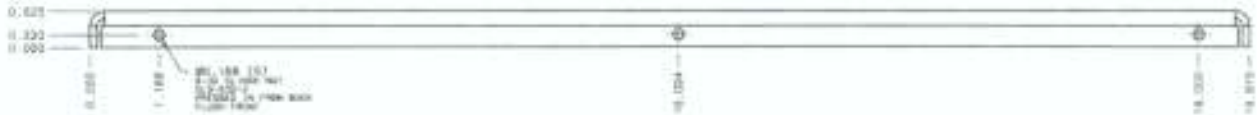

7-SIDE VIEW

CONTRACT NO.		FEDERAL AVIATION ADMINISTRATION 800 S. MACARTHUR BLVD. OKLAHOMA CITY, OK 73169	
APPROVALS	DATE	TITLE: POWER DISTRIBUTION UNIT	
		POWER SUPPLY BASE ADDITIONAL VIEWS	
		LRF-000007-0003	
		SHEET 4 OF 24	

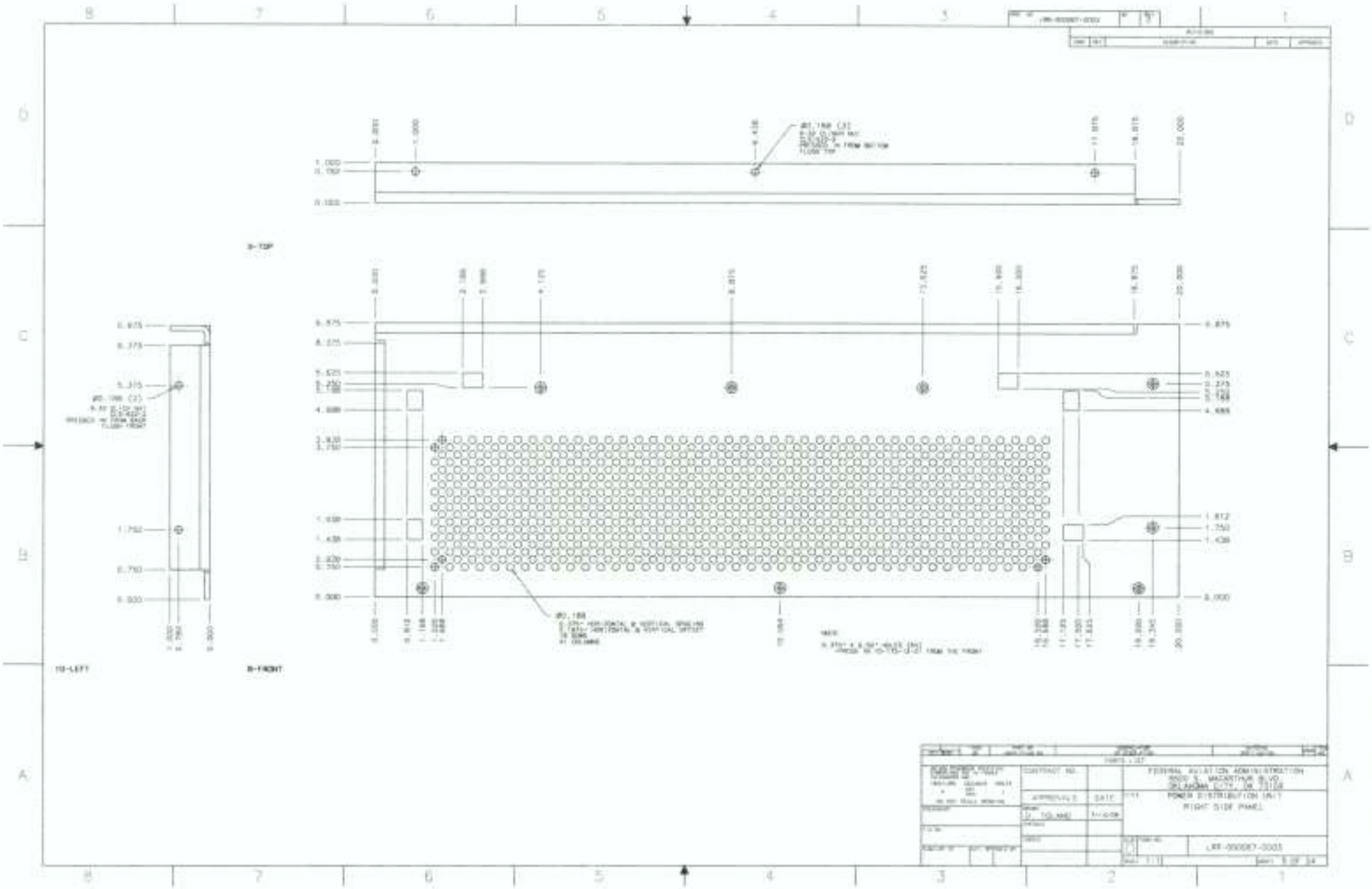
B-TOP
10-LEFT
B-FRONT
FEDERAL AVIATION ADMINISTRATION
9500 S. MACARTHUR BLVD.
OKLAHOMA CITY, OK 73128
POWER DISTRIBUTION UNIT
RIGHT SIDE PANEL
LRR-000067-0003

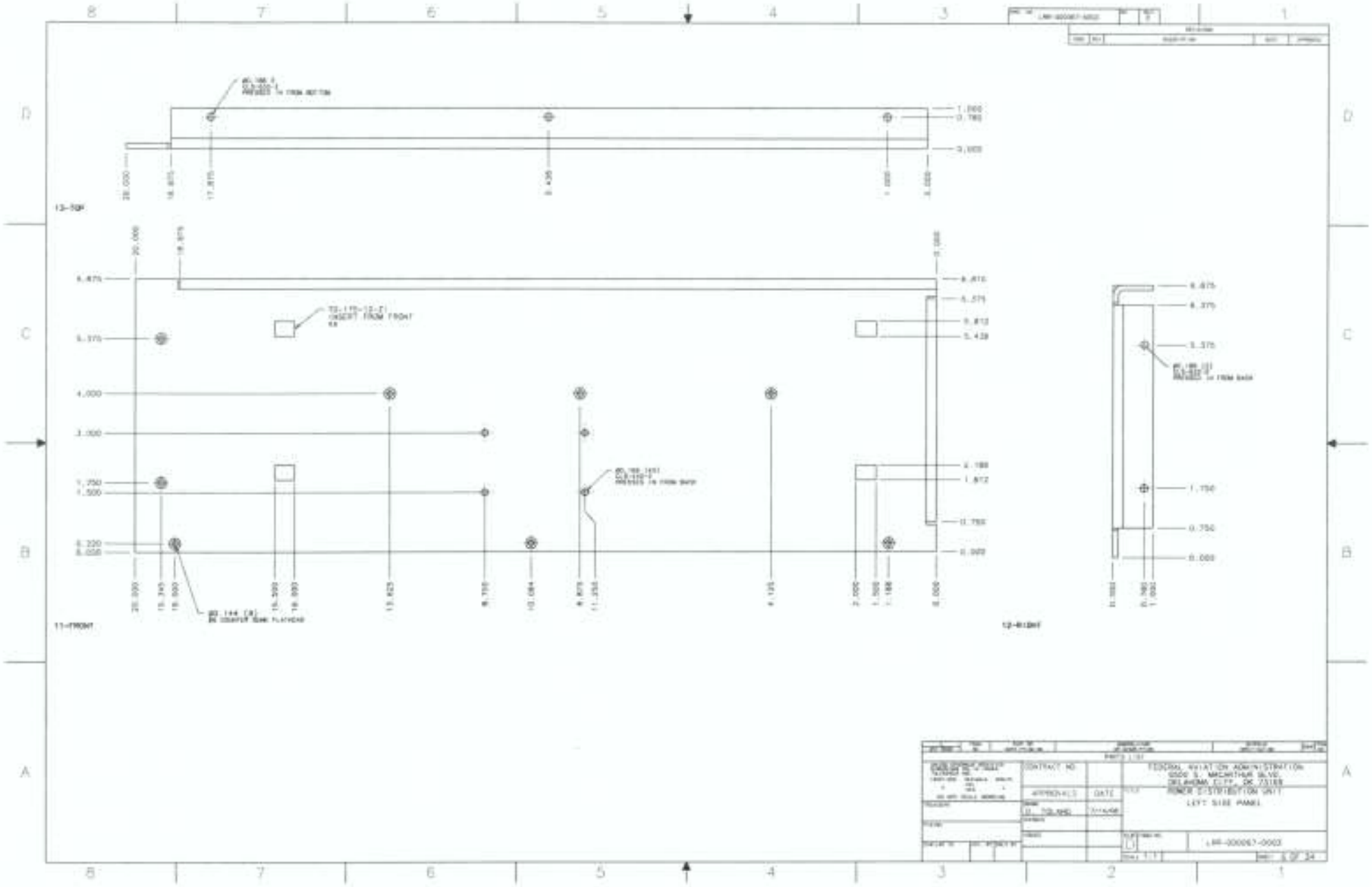
13-TOP
11-FRONT
12-RIGHT
FEDERAL AVIATION ADMINISTRATION
6500 S. MACARTHUR BLVD.
OKLAHOMA CITY, OK 73169
POWER DISTRIBUTION UNIT
LEFT SIDE PANEL
LMR-000067-0003

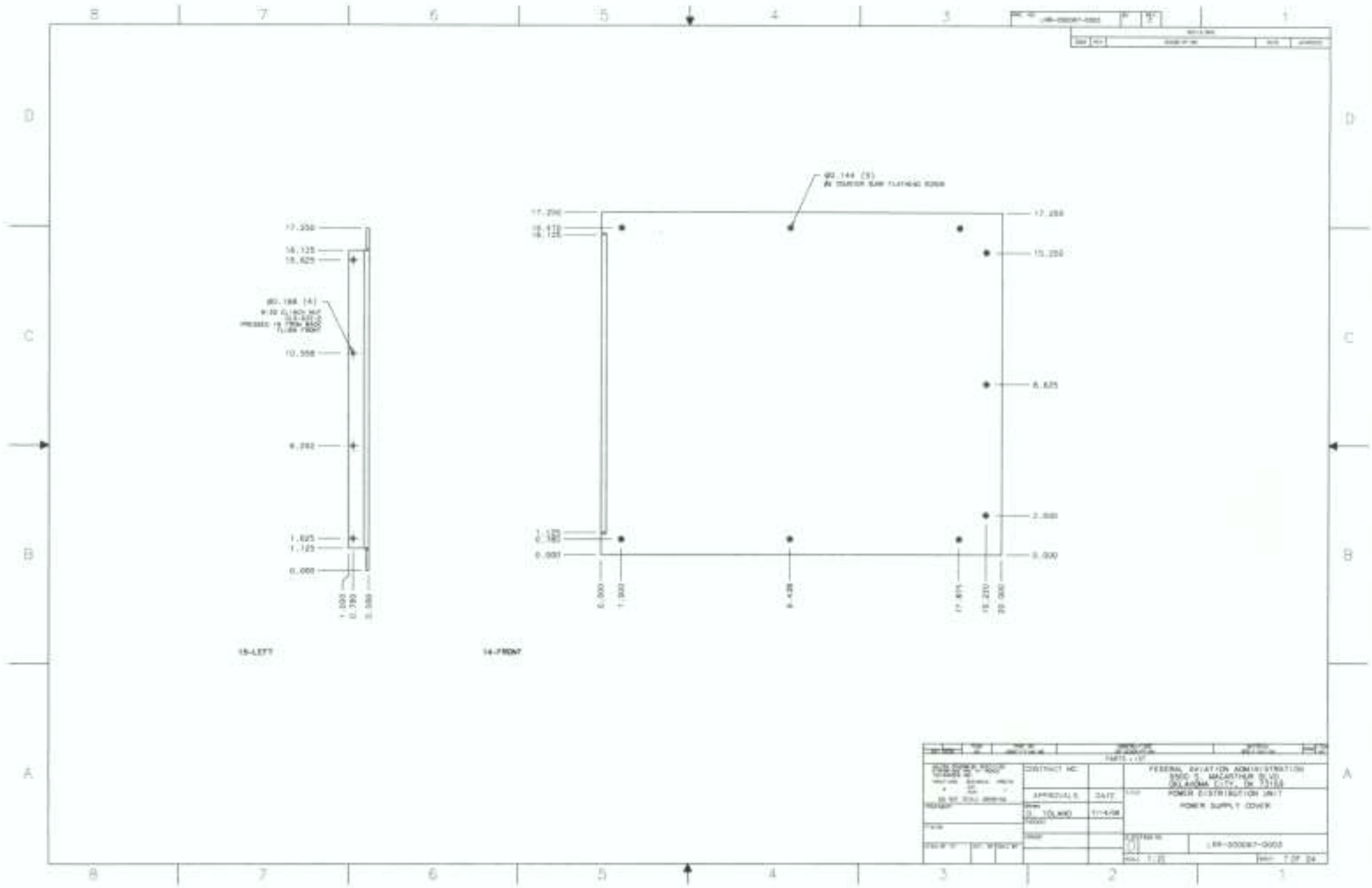

17.250
16.125
15.625
10.558
9.292
1.625
1.125
0.000
1.000
0.750
0.500
15-LEFT
17.250
16.625
16.125
15.250
8.625
2.000
1.125
0.750
0.000
0.000
1.000
9.428
17.875
19.220
20.000
14-FRONT
PARTS LIST
CONTRACT NO.
APPROVALS
DATE
D. TOLAND
FEDERAL AVIATION ADMINISTRATION
6500 S. MACARTHUR BLVD.
OKLAHOMA CITY, OK 73169
POWER DISTRIBUTION UNIT
POWER SUPPLY COVER
LRR-000087-0003
SCALE 1:20
SHEET 7 OF 24

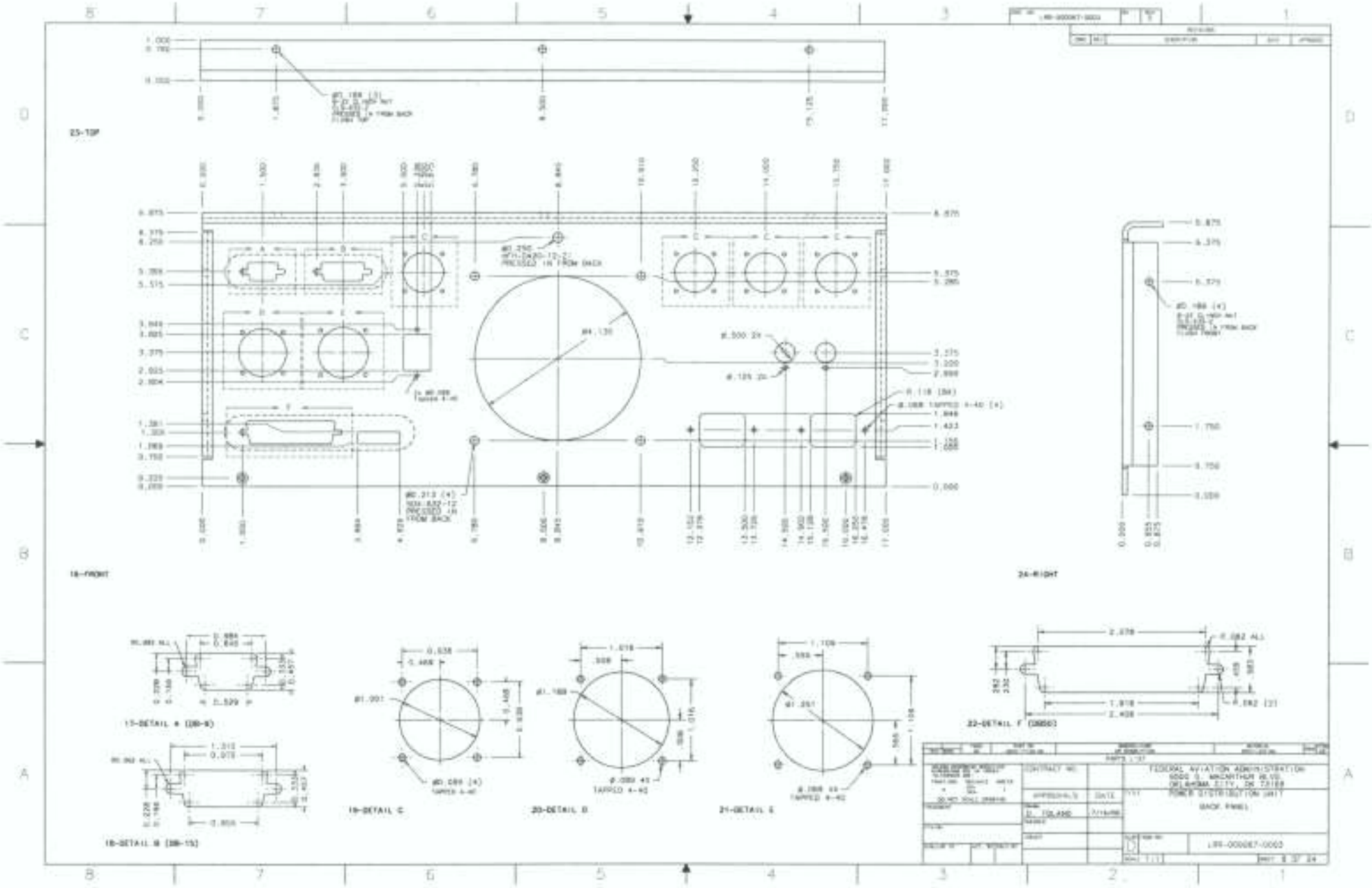
23-TOP
18-FRONT
24-RIGHT
15-DETAIL A (DB-9)
16-DETAIL B (DB-15)
19-DETAIL C
20-DETAIL D
21-DETAIL E
22-DETAIL F (DB50)
FEDERAL AVIATION ADMINISTRATION
6500 S. MACARTHUR BLVD.
OKLAHOMA CITY, OK 73169
POWER DISTRIBUTION UNIT
BACK PANEL
LRR-000067-0003

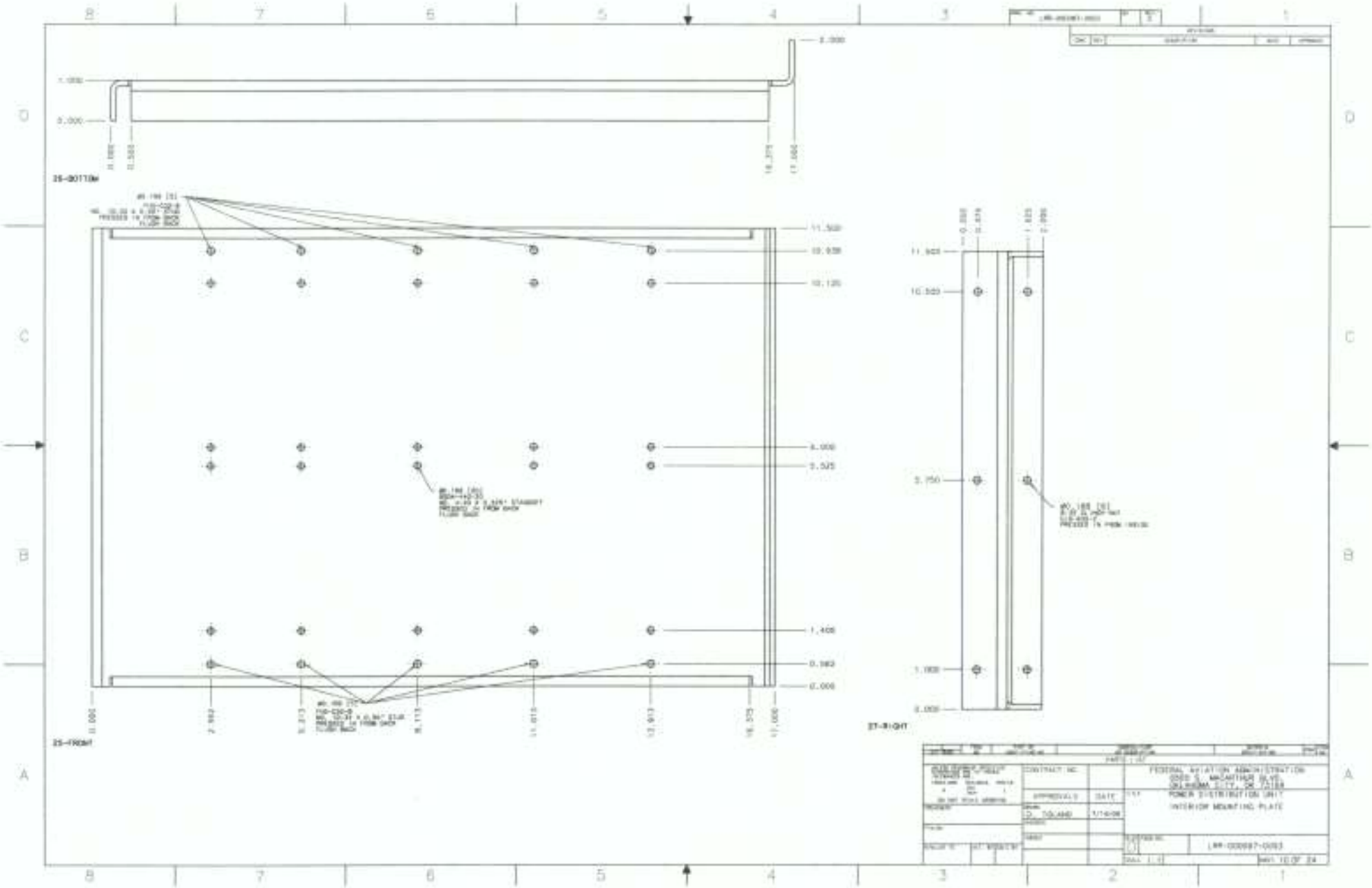

2S-BOTTOM
2S-FRONT
2T-RIGHT
FEDERAL AVIATION ADMINISTRATION
POWER DISTRIBUTION UNIT
INTERIOR MOUNTING PLATE
CONTRACT NO.
APPROVALS
DATE
D. TOLAND
LMR-000087-0003
SHEET 10 OF 24

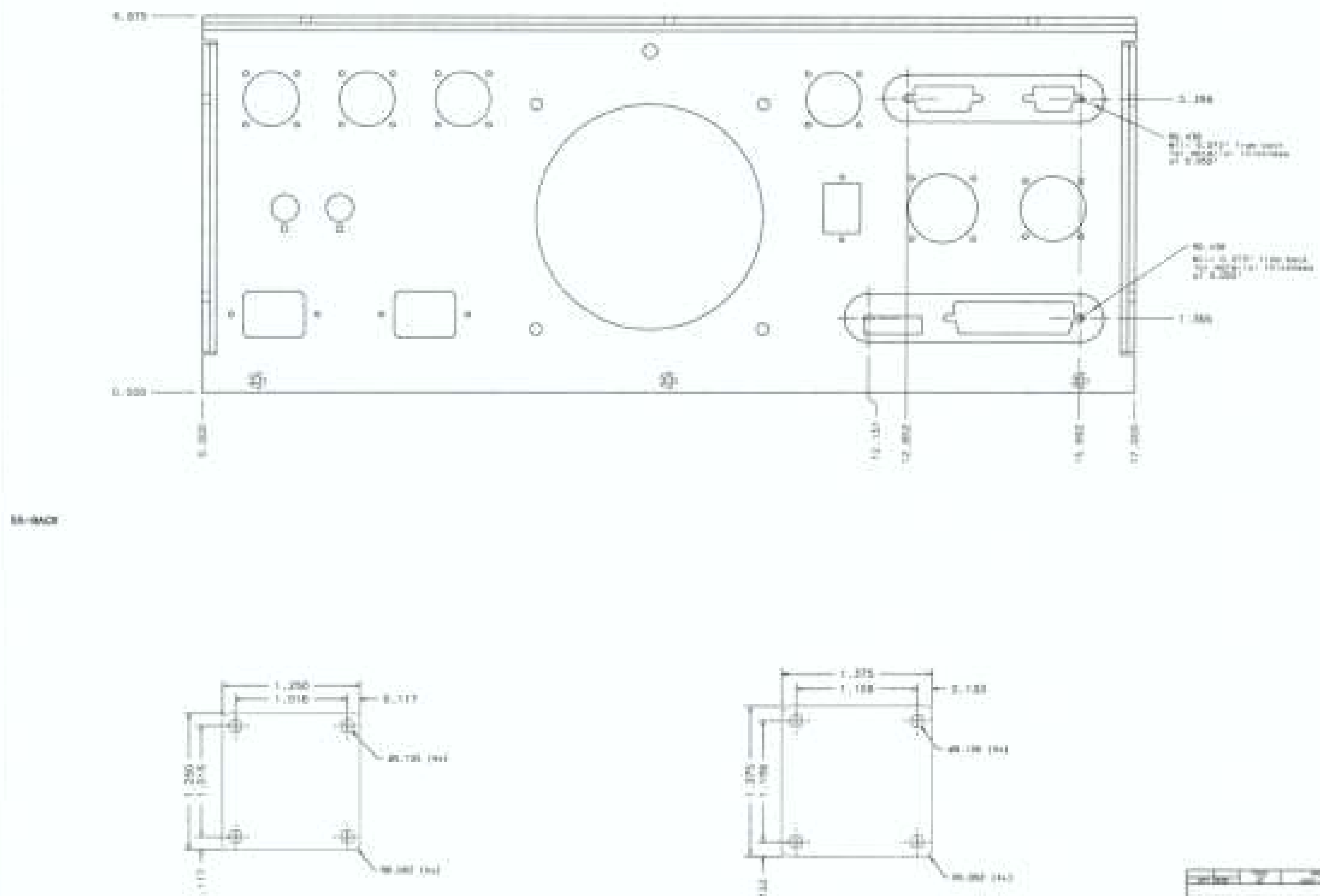

SS-BACK

80-J10 COVER - FRONT VIEW (2:1)

81-J11 COVER - FRONT VIEW (2:1)

CONTRACT NO.		FEDERAL AVIATION ADMINISTRATION 6500 S. MACARTHUR BLVD. OKLAHOMA CITY, OK 73169
APPROVALS	DATE	POWER DISTRIBUTION UNIT
D. TOLAND	1/14/08	BACK PANEL J10 COVER J11 COVER
		LRR-000067-0002
		SCALE 1:1 — SHEET 6 OF 24

PARTS LIST

DO NOT SCALE DRAWING

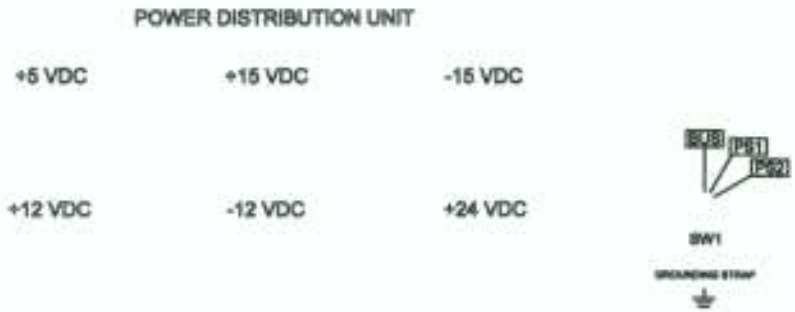

62-POWER SUPPLY FRONT - SILKSCREEN - FRONT VIEW (1:1)

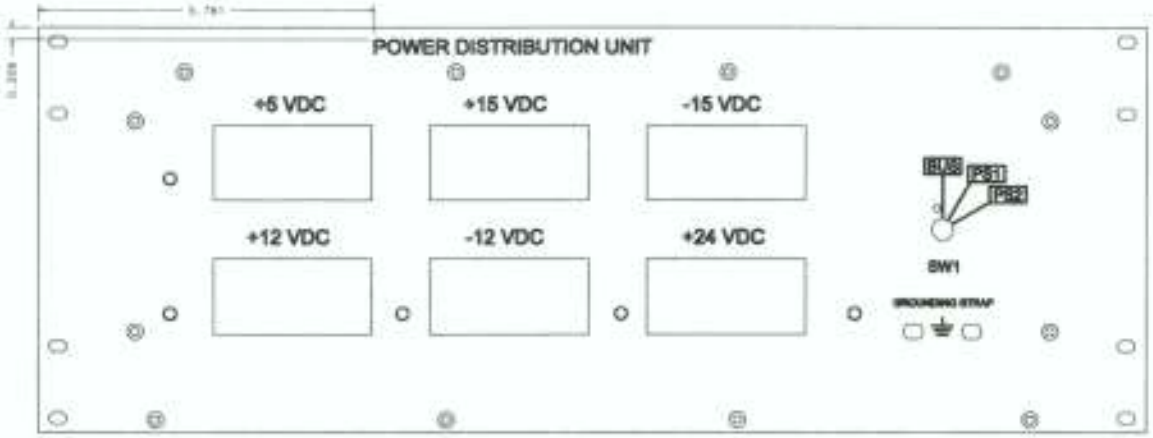

63-POWER SUPPLY FRONT - SILKSCREEN - FRONT VIEW WITH PANEL (1:1)

PARTS LIST

CONTRACT NO.		FEDERAL AVIATION ADMINISTRATION 6500 S. MACARTHUR BLVD. OKLAHOMA CITY, OK 73168
APPROVALS	DATE	POWER DISTRIBUTION UNIT
D. TOLAND	7/14/08	SILKSCREEN FRONT PANEL FRONT VIEW
		LRR-000087-0003
		SHEET 11 OF 24

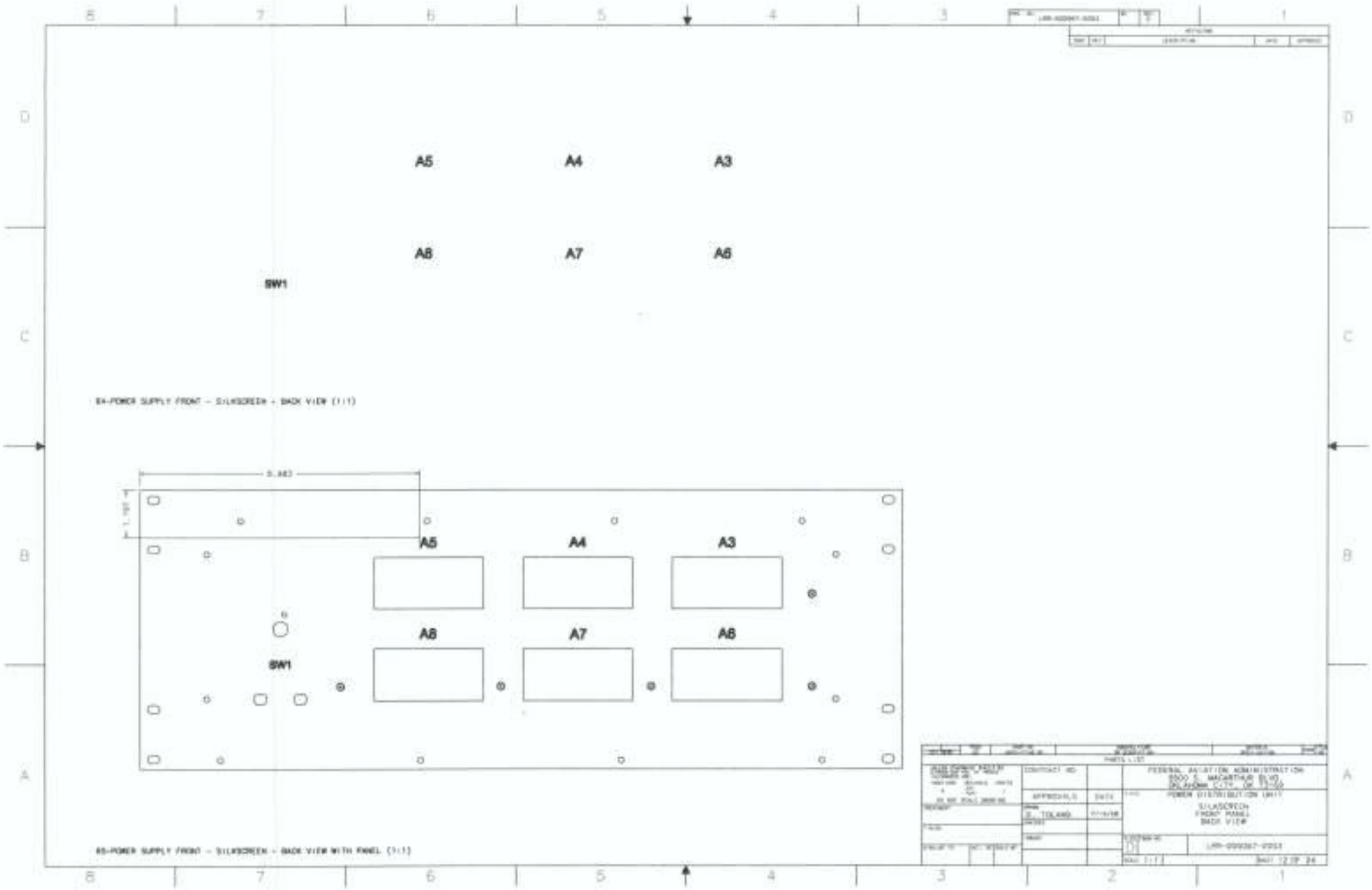
A5
A4
A3
A8
A7
A6
SW1
A5
A4
A3
A8
A7
A6
SW1
FEDERAL AVIATION ADMINISTRATION
POWER DISTRIBUTION UNIT
SILKSCREEN
FRONT PANEL
BACK VIEW
APPROVALS
DATE
D. TOLAND
SHEET 12 OF 24

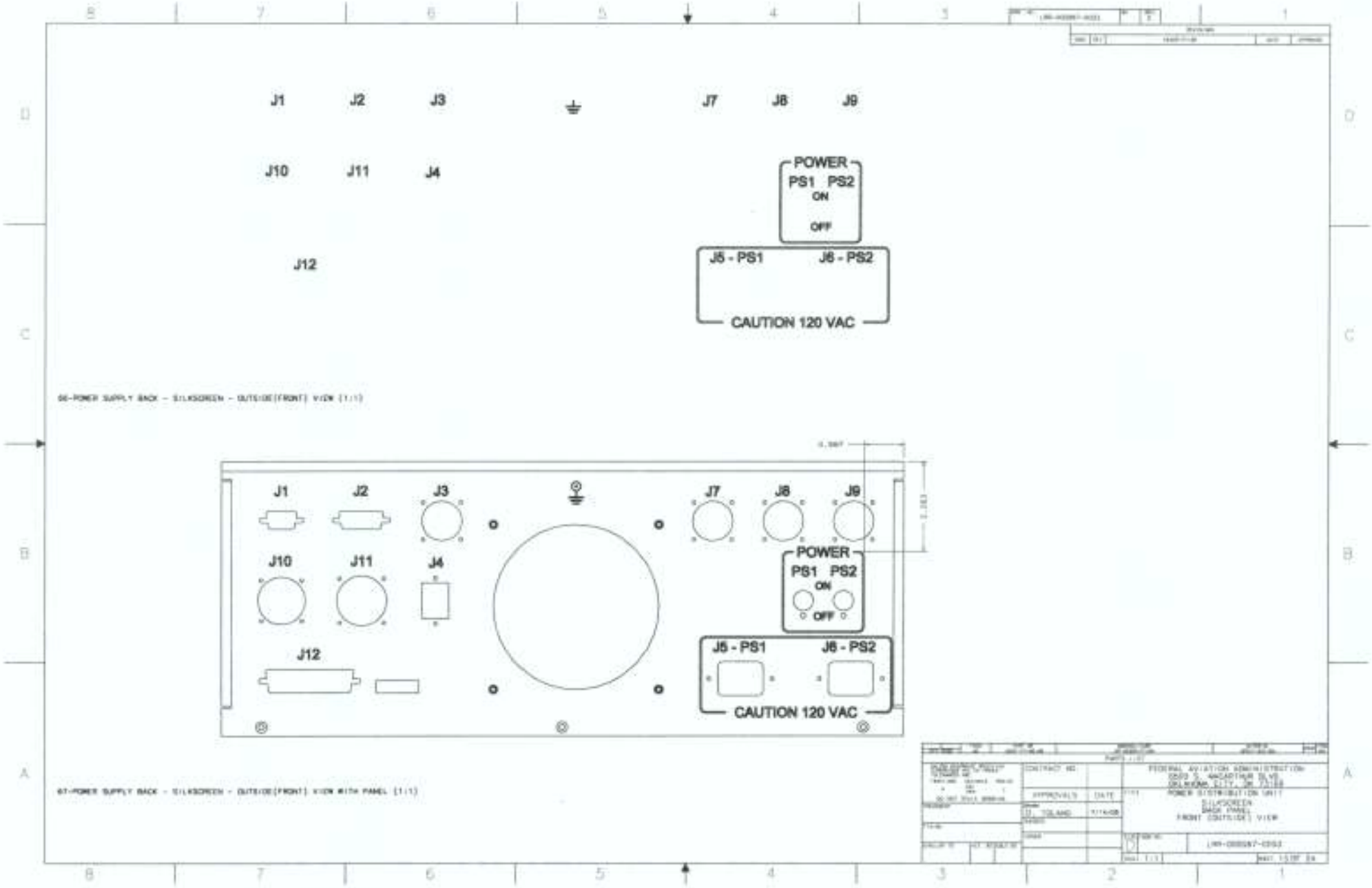
J1
J2
J3
J7
J8
J9
J10
J11
J4
J12
POWER
PS1 PS2
ON
OFF
J5 - PS1
J6 - PS2
CAUTION 120 VAC
06-POWER SUPPLY BACK - SILKSCREEN - OUTSIDE(FRONT) VIEW (1:1)
J1
J2
J3
J7
J8
J9
J10
J11
J4
J12
POWER
PS1 PS2
ON
OFF
J5 - PS1
J6 - PS2
CAUTION 120 VAC
07-POWER SUPPLY BACK - SILKSCREEN - OUTSIDE(FRONT) VIEW WITH PANEL (1:1)
CONTRACT NO.
APPROVALS
DATE
D. TOLAND
FEDERAL AVIATION ADMINISTRATION
6500 S. MACARTHUR BLVD.
OKLAHOMA CITY, OK 73168
POWER DISTRIBUTION UNIT
SILKSCREEN
BACK PANEL
FRONT (OUTSIDE) VIEW

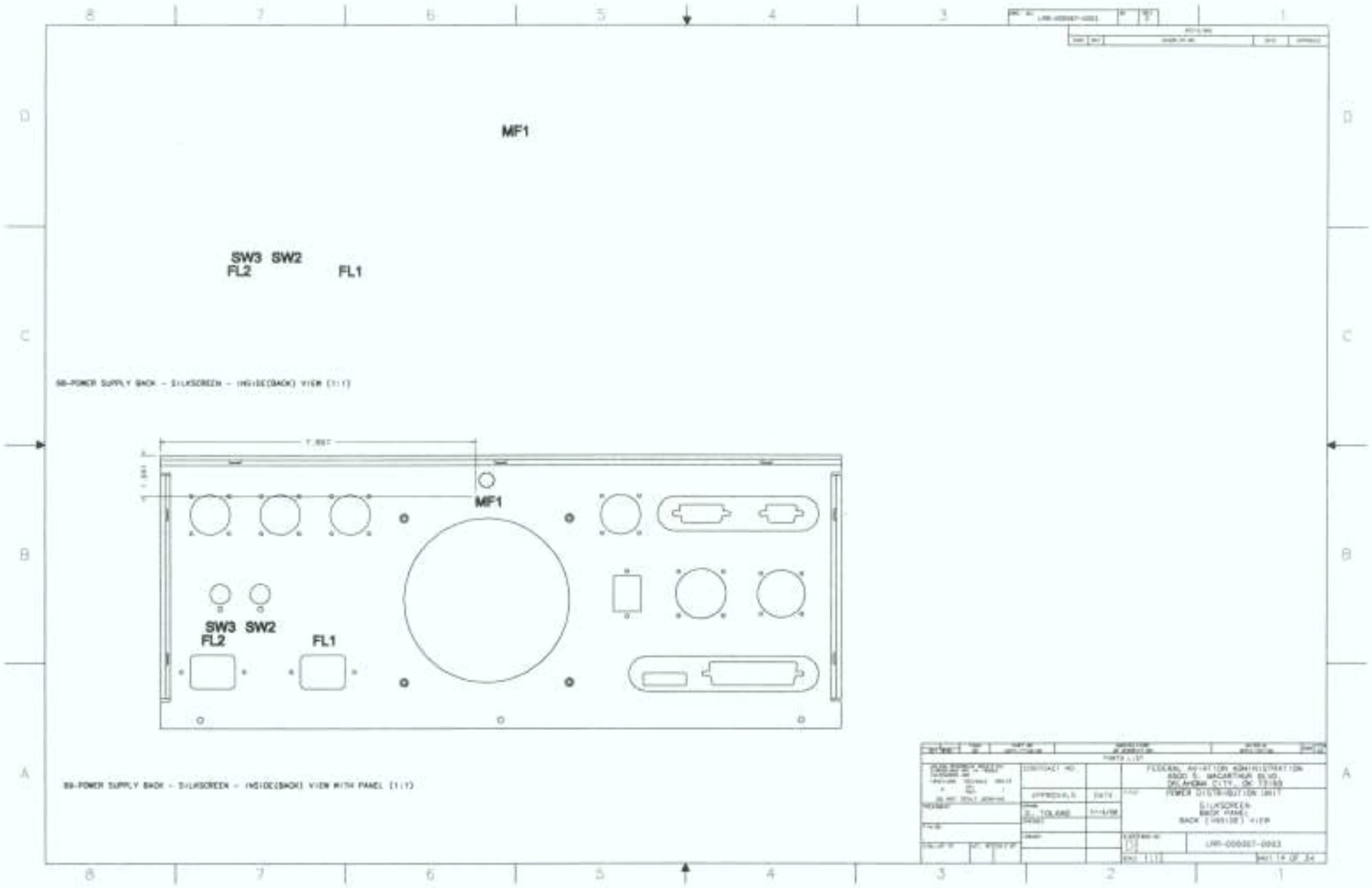
MF1
SW3 SW2
FL2
FL1
SB-POWER SUPPLY BACK - SILKSCREEN - INSIDE(BACK) VIEW (1:1)
MF1
SW3 SW2
FL2
FL1
SB-POWER SUPPLY BACK - SILKSCREEN - INSIDE(BACK) VIEW WITH PANEL (1:1)
FEDERAL AVIATION ADMINISTRATION
6500 S. MACARTHUR BLVD.
OKLAHOMA CITY, OK 73169
POWER DISTRIBUTION UNIT
SILKSCREEN
BACK PANEL
BACK (INSIDE) VIEW
LRR-000007-0003
SHEET 14 OF 34

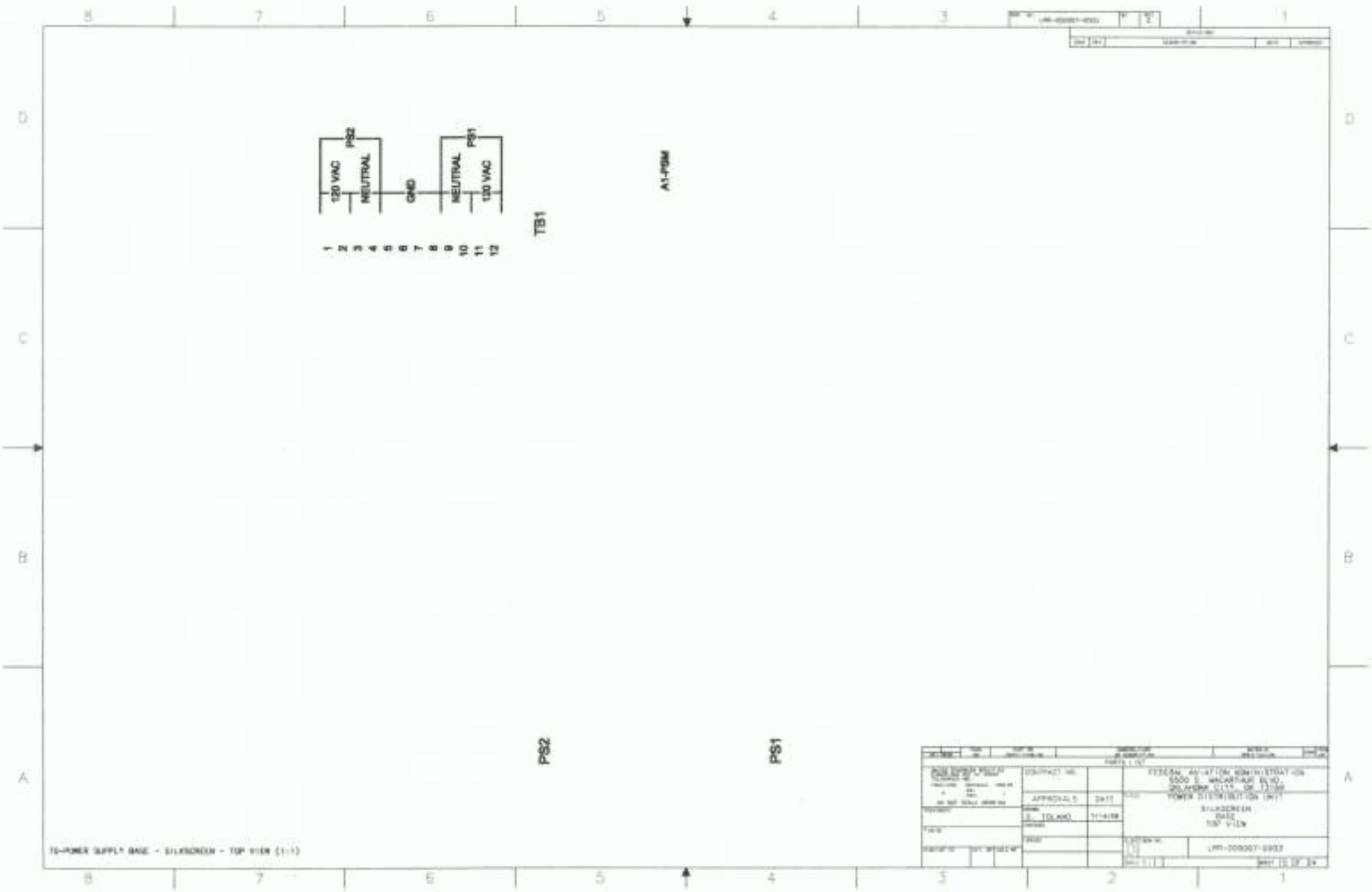

120 VAC
NEUTRAL
GND
NEUTRAL
120 VAC
PS2
PS1
1
2
3
4
5
6
7
8
9
10
11
12
TB1
A1-PSM
PS2
PS1
TO-POWER SUPPLY BASE - SILKSCREEN - TOP VIEW (1:1)
FEDERAL AVIATION ADMINISTRATION
5500 S. MACARTHUR BLVD.
OKLAHOMA CITY, OK 73169
POWER DISTRIBUTION UNIT
SILKSCREEN
BASE
TOP VIEW
APPROVALS
DATE
S. TOLAND

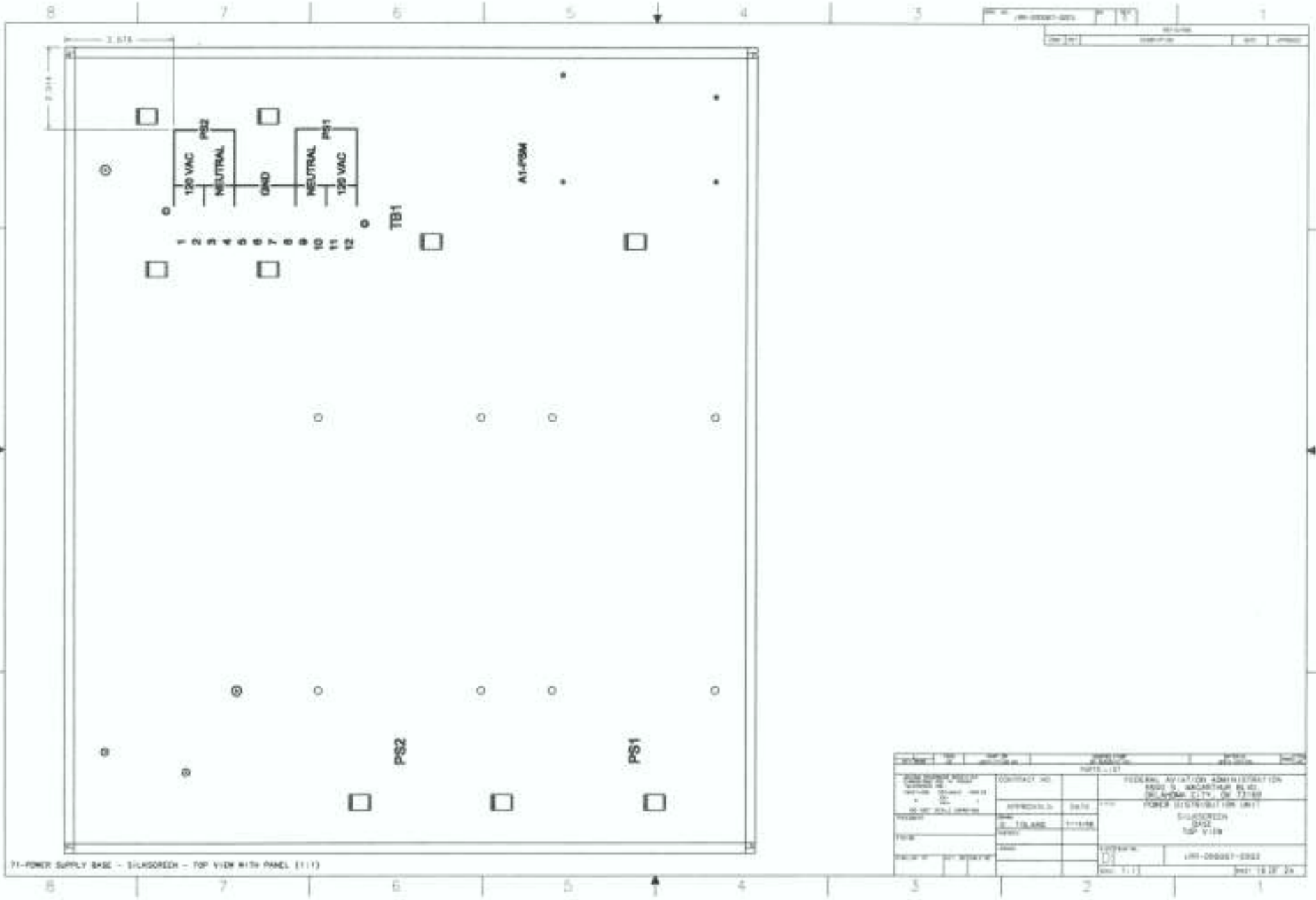

120 VAC
NEUTRAL
GND
NEUTRAL
120 VAC
PS2
PS1
TB1
A1-PSM
1 2 3 4 5 6 7 8 9 10 11 12
PS2
PS1
71-POWER SUPPLY BASE - SILKSCREEN - TOP VIEW WITH PANEL (1:1)
FEDERAL AVIATION ADMINISTRATION
POWER DISTRIBUTION UNIT
SILKSCREEN
BASE
TOP VIEW

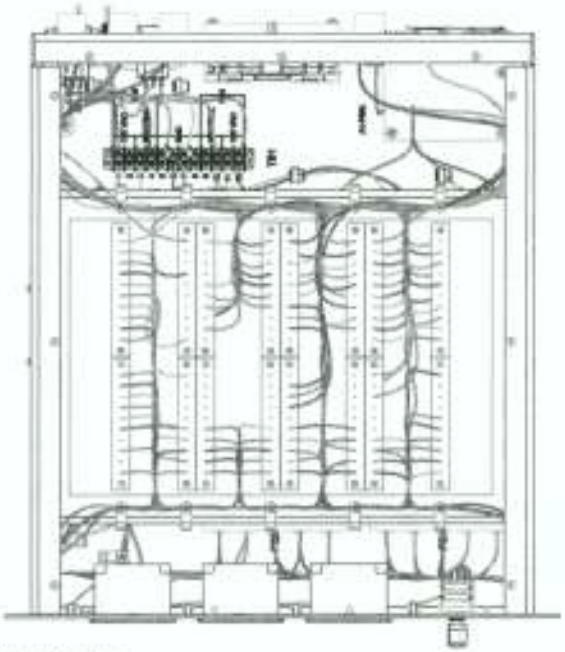

90-WIRE HARNESS_1up

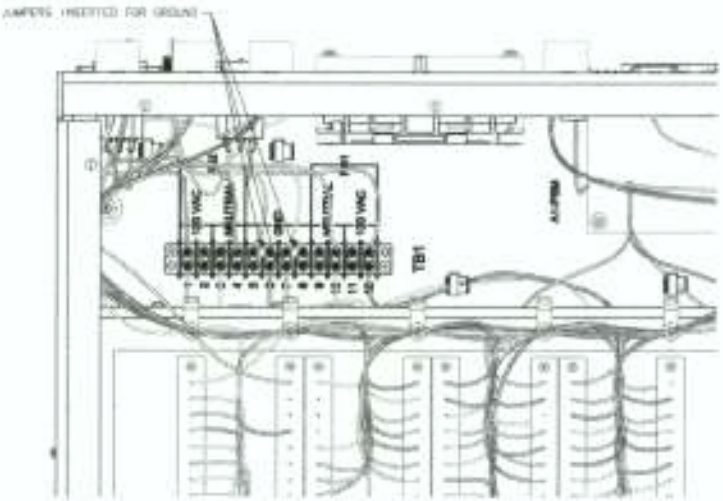

92-WIRE HARNESS_2

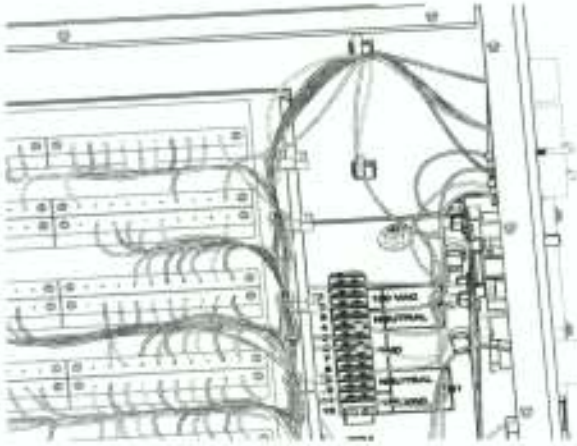

93-WIRE HARNESS_3

PARTS LIST

CONTRACT NO.		FEDERAL AVIATION ADMINISTRATION 6500 S. MACARTHUR BLVD. OKLAHOMA CITY, OK 73168
APPROVALS	DATE	POWER DISTRIBUTION UNIT WIRE ROUTING
		LPR-000067-0003
		SHEET 17 OF 24

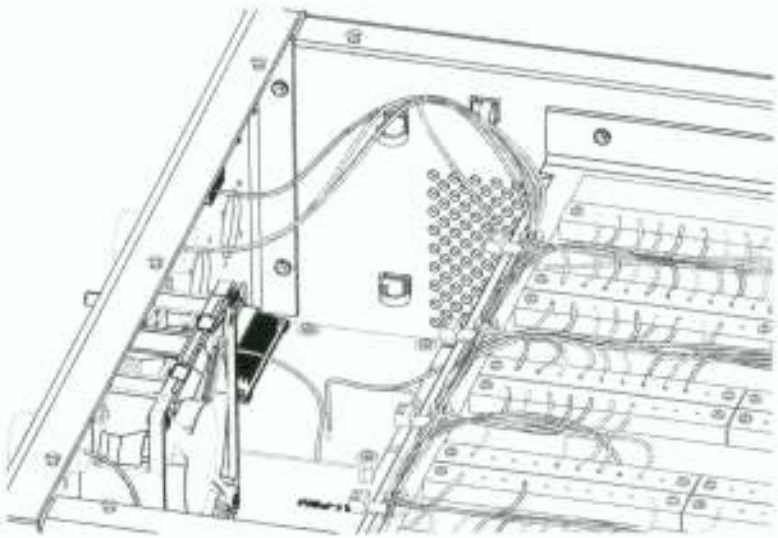

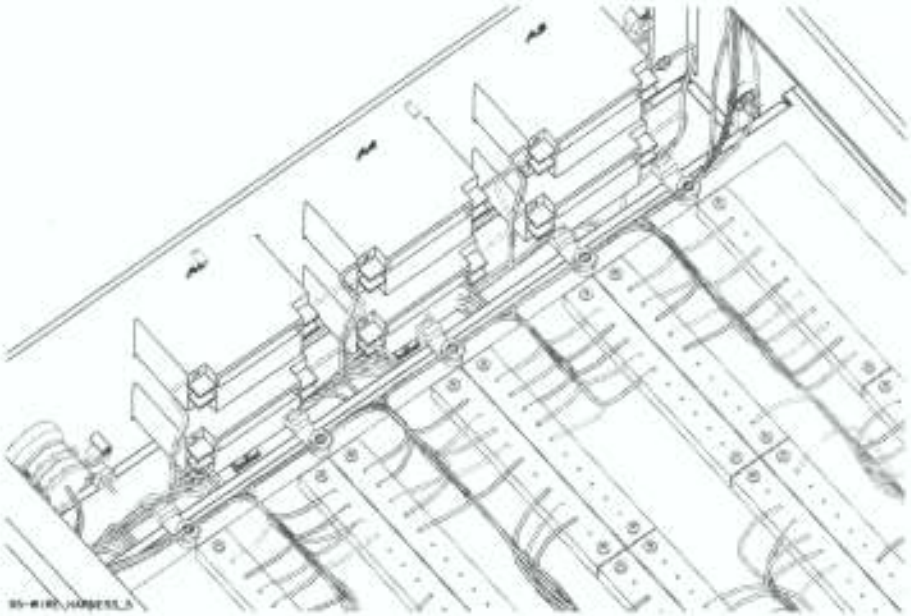

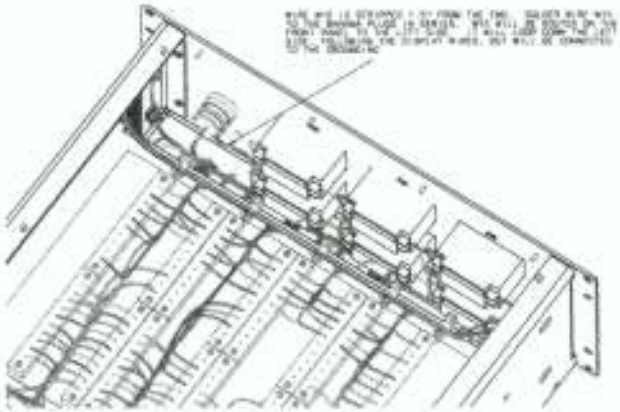

FEDERAL AVIATION ADMINISTRATION
5500 S. MACARTHUR BLVD.
OKLAHOMA CITY, OK 73168

POWER DISTRIBUTION UNIT
WIRE ROUTING
CONTRACTS

CONTRACT NO.

APPROVALS | DATE

D. TOLAND

D

LR9-000067-0003

SHEET 18 OF 24

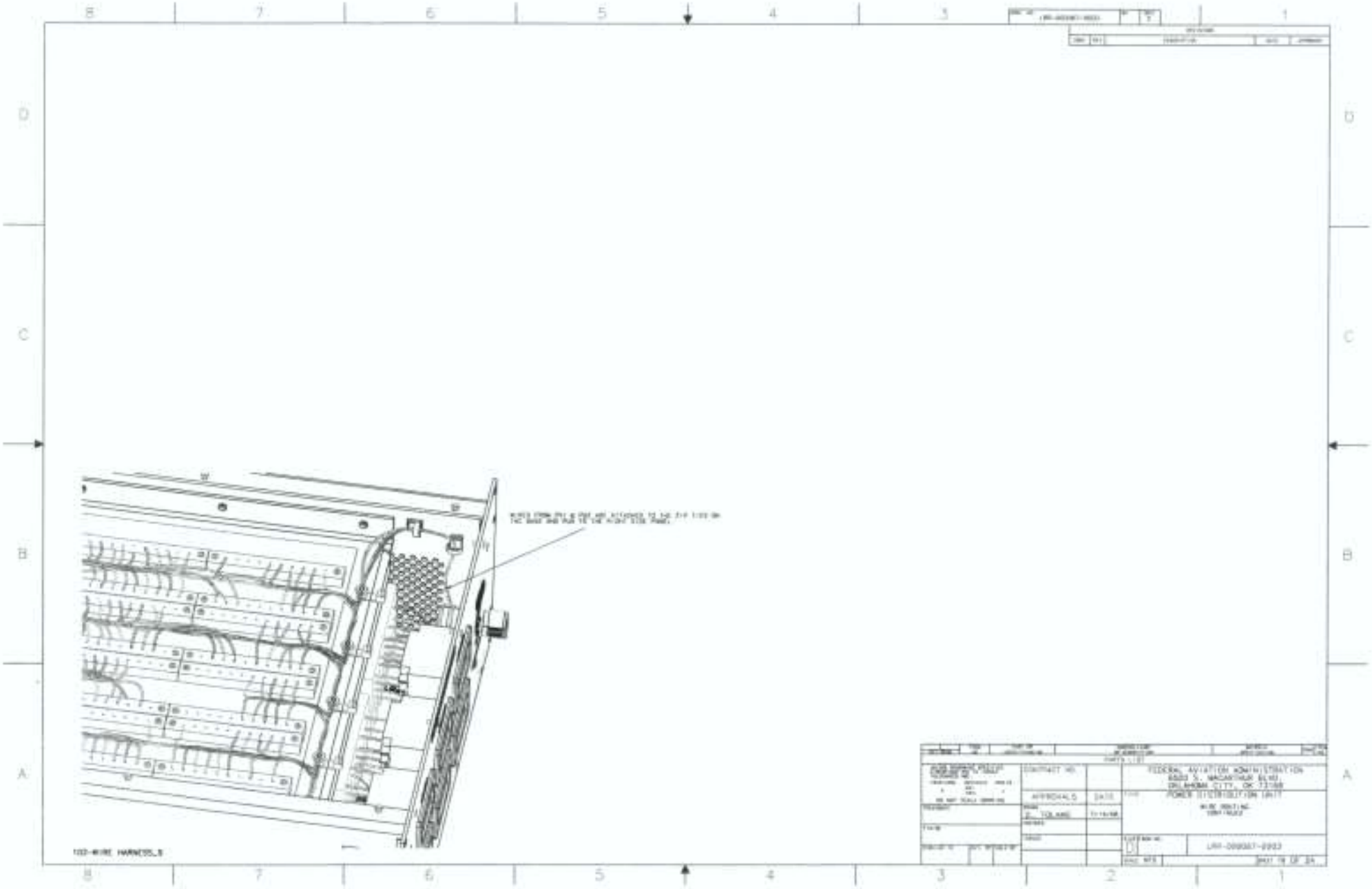

100-WIRE HARNESS_B
CONTRACT NO.
APPROVALS
DATE
FEDERAL AVIATION ADMINISTRATION
6500 S. MACARTHUR BLVD.
OKLAHOMA CITY, OK 73168
POWER DISTRIBUTION UNIT
WIRE ROUTING
LRP-000007-0003

1. INSTALL POWER SUPPLIES TO THE BASE USING THE NO. 6-32 COUNTERSUNK SCREWS.
2. INSTALL THE TERMINAL BLOCK TO THE BASE USING THE NO. 6-32 STAINLESS STEEL PHILLIPS PANHEAD SCREWS.
3. INSTALL THE PSM FROM THE TOP TO THE NO. 4-40 STANDOFFS LOCATED NEAR THE BACK RIGHT CORNER OF THE BASE. USE THE NO. 4-40 STAINLESS STEEL PHILLIPS PANHEAD SCREWS, WASHERS, AND SPLIT WASHERS.

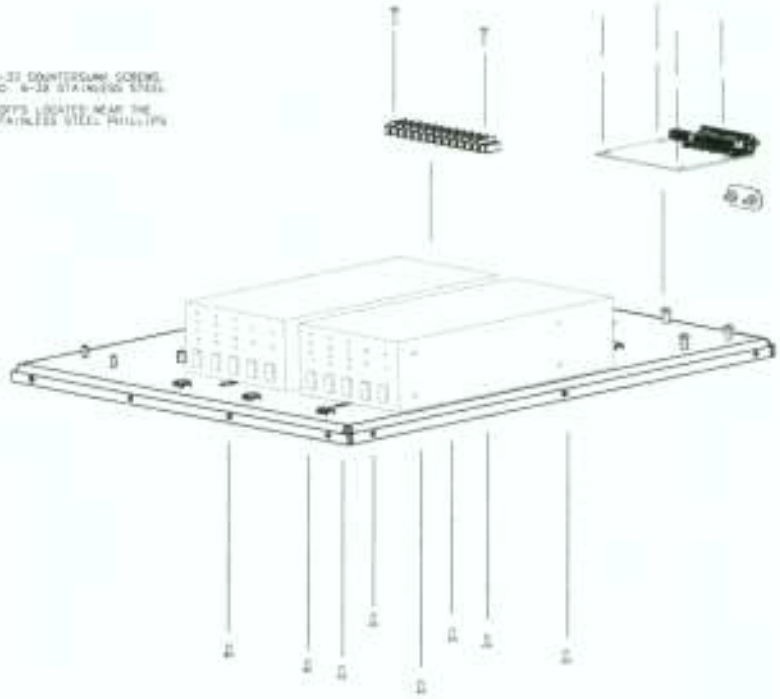

104-ISOMETRIC

PARTS LIST

CONTRACT NO.		FEDERAL AVIATION ADMINISTRATION 6500 S. MACARTHUR BLVD. OKLAHOMA CITY, OK 73168
APPROVALS	DATE	POWER DISTRIBUTION UNIT ASSEMBLY BASE COMPONENTS
U. TOLAND	7/14/08	
		LPR-000087-0003
		SHEET 20 OF 24

1. INSTALL THE MINIATURE METERS FROM THE FRONT OF THE PANEL. TIGHTEN DISPLAYS WITH THE HARDWARE THAT WAS SUPPLIED BY THE MANUFACTURER TO THE MANUFACTURERS SPECIFIED TOLERANCES.
2. INSERT THE BANANA JACKS FROM THE FRONT AND TIGHTEN WITH THE SUPPLIED NUT.
3. INSTALL ROTARY SWITCH FROM THE BACK SIDE OF THE PANEL. ALIGN SWITCH ACCORDING TO THE ALIGNMENT DETAILS. TIGHTEN THE SWITCH TO THE MANUFACTURERS SPECIFIED TOLERANCES. ATTACH THE SWITCH KNOB FROM THE FRONT USING THE SUPPLIED SCREW. ADJUST THE KNOB TO ALIGN WITH THE SILKSCREEN LINES.
4. ZIP TIES WILL CONNECT TO THE NO. 10-32 STUDS USING A NO. 10-32 HEX NUT.

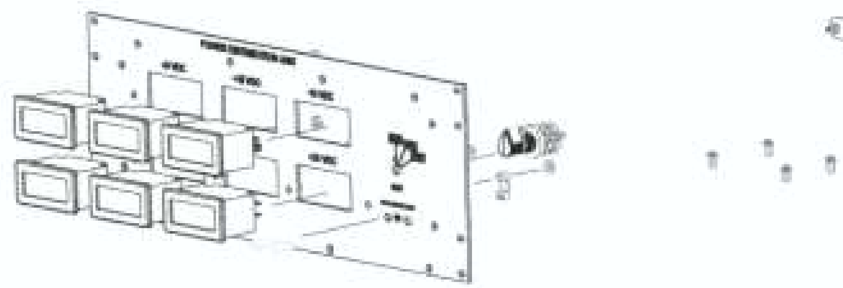

107-FRONT

PARTS LIST

CONTRACT NO.	FEDERAL AVIATION ADMINISTRATION 6500 S. MACARTHUR BLVD. OKLAHOMA CITY, OK 73169
APPROVALS / DATE	POWER DISTRIBUTION UNIT ASSEMBLY FRONT PANEL
D. TOLAND / 1/14/08	D / LPR-000067-0003
	SHEET 21 OF 24

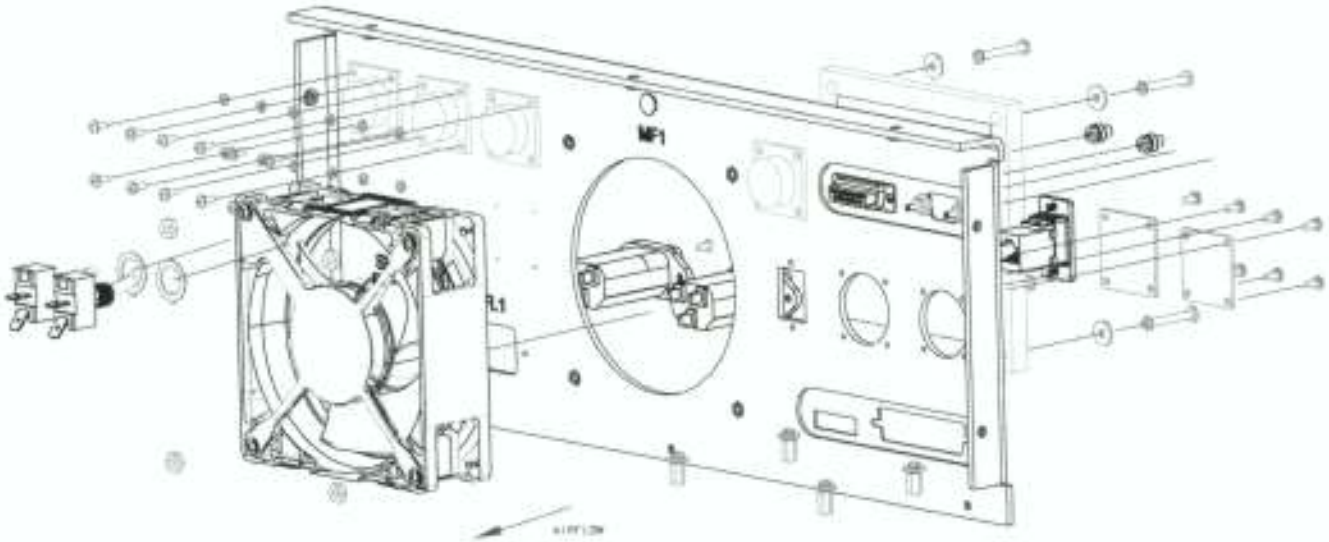

108-ISOMETRIC

1. INSTALL LINE FILTERS FROM THE BACK SIDE USING NO. 4-40 STAINLESS STEEL COUNTERSUNK SCREWS.
2. INSTALL THE TWO SWITCHES USING THE SUPPLIED HEX NUT. ALIGN SWITCHES USING THE LOCKING RING POSITIONED BETWEEN THE SWITCH AND THE BACK PANEL.
3. INSERT THE RJ-45 CONNECTOR FROM THE FRONT USING NO. 4-40 X 1/4" STAINLESS STEEL PHILLIPS PANHEAD SCREWS.
4. INSTALL THE J10 COVER USING NO. 4-40 X 1/4" STAINLESS STEEL PHILLIPS PANHEAD SCREW AND SPLIT WASHER.
5. INSTALL THE J11 COVER USING NO. 4-40 X 1/4" STAINLESS STEEL PHILLIPS PANHEAD SCREW AND SPLIT WASHER.
6. INSTALL THE TWO BD CONNECTORS FROM THE BACK USING THE NO. 4-40 JACK SCREWS.
7. INSERT EMI FILTER FROM THE BACK SIDE OVER THE STANDOFFS. THE EMI FILTERS HOLES MUST BE ENLARGED TO +0.213" TO CLEAR THE STANDOFFS. USE THE NO. 8-32 X 1/4" STAINLESS STEEL PHILLIPS PANHEAD SCREWS, NO. 4 SPLIT WASHER, AND NO. 4 FLAT WASHERS. SECURE THE EMI FILTER, BUT DO NOT TIGHTEN AS TO DEFORM THE FILTER. THERE WILL BE A LENGTH OF THREADS THAT PROTRUDE OUT FROM THE FRONT OF THE PANEL.
8. INSERT THE MUFFIN FAN FROM THE FRONT OVER THE NO. 8-32 SCREWS THAT ARE USED FOR THE EMI FILTER. ATTACH THE MUFFIN FAN SECURELY USING THE NO. 8-32 HEX NUTS. THE MUFFIN FAN NEEDS TO BE MOUNTED SO THAT THE AIR IS BLOWING INTO THE UNIT.
9. INSERT THE FOUR CIRCULAR CONNECTORS FROM THE FRONT AND ATTACH USING THE NO. 4-40 X 1/4" STAINLESS STEEL PHILLIPS PANHEAD SCREWS, NO. 4 SPLIT WASHERS, AND THE NO. 4 FLAT WASHERS.

CONTRACT NO.		FEDERAL AVIATION ADMINISTRATION 6500 S. MACARTHUR BLVD. OKLAHOMA CITY, OK 73168	
APPROVALS	DATE	POWER DISTRIBUTION UNIT ASSEMBLY BACK PANEL	
D. TOLAND	1-14-08		
		LRR-000067-0002	
		SHEET 22 OF 24	

1. ASSEMBLE THE SIDES, COMPLETED FRONT PANEL AND COMPLETED BACK PANEL USING THE NO. 8-32 COUNTER SUNK SCREWS.
2. INSTALL THE MOUNTING PANEL FROM THE TOP AND CONNECT TO THE CHASSIS USING THE NO. 8-32 COUNTER SUNK SCREWS.
3. INSTALL PRINTED CIRCUIT CARD FROM THE TOP ONTO THE STANDOFFS ON THE MOUNTING PANEL USING THE NO. 4-40 X 3/8" HARDWARE. HARDWARE THAT DOESN'T HAVE A STANDOFF DIRECTLY BELOW WILL USE A NO. 8-32 HEX NUT.

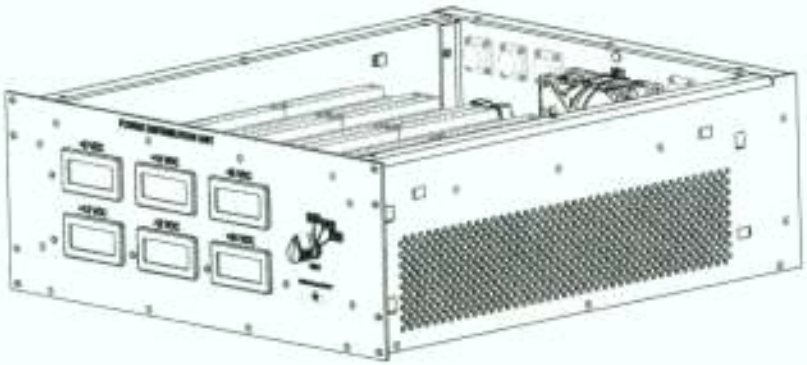

VDR-ISOMETRIC

CONTRACT NO.		FEDERAL AVIATION ADMINISTRATION 6500 S. MACARTHUR BLVD. OKLAHOMA CITY, OK 73169	
APPROVALS	DATE	POWER DISTRIBUTION UNIT ASSEMBLY CHASSIS & MOUNTING PANEL	
D. IOLAND	7/16/98		
		D	LRR-000057-0003
		SHEET NTS	SHEET 23 OF 24

1. INSTALL WIRE HARNESSES ACCORDING THE WIRE ROUTING DIAGRAMS.
2. ATTATCH COVER TO THE CHASSIS USING THE NO. 6-32 COUNTER SUNK SCREWS.

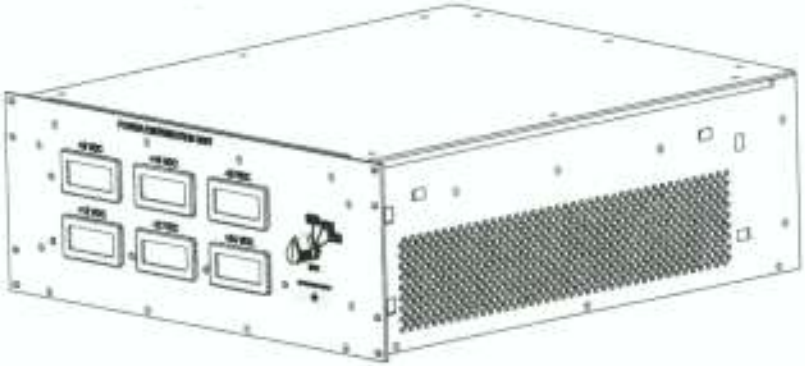

FID-ISOMETRIC

PARTS LIST

CONTRACT NO.		FEDERAL AVIATION ADMINISTRATION 6500 S. MACARTHUR BLVD. OKLAHOMA CITY, OK 73169
APPROVALS	DATE	TITLE: POWER DISTRIBUTION UNIT ASSEMBLY COMPLETED CHASSIS
D. TOLANE	7/16/98	
		D — JRR-000067-0003
		SHEET NTS — SHEET 24 OF 24

DWG. NO. LRR-001118-0201 REV. -

Item	Qty	Name	Manufacturer	Part #	Material
1	2	#4-40 x 1/2 inch Clinch Stud	Penn Engineering	FHS-440-8	
2	1	Cover - DB-9		LRR-001118-0201	18 GAGE COLD ROLLED STEEL

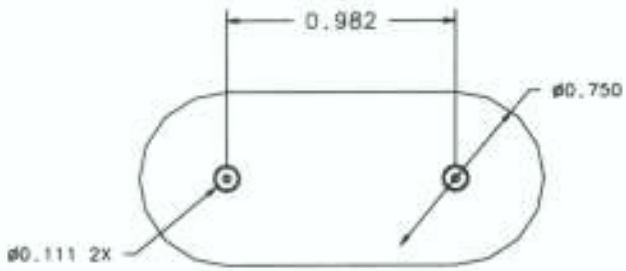

3-FRONT

NOTES:

1. 18 GAGE COLD ROLLED STEEL
2. DEBURR ALL EDGES
3. INSERT HARDWARE FROM THE FRONT
4. PLATE USING YELLOW ZINC CHROMATE CONVERSION
5. INSERT FROM BACK PANEL OF CHASSIS INTO J1
6. FASTEN WITH #4-40 HARDWARE

QTY REQD	FSCM NO	PART OR IDENTIFYING NO	NOMENCLATURE OR DESCRIPTION	MATERIAL SPECIFICATION	ITEM NO

PARTS LIST

UNLESS OTHERWISE SPECIFIED DIMENSIONS ARE IN INCHES TOLERANCES ARE:
FRACTIONS ± DECIMALS .XX-.01 .XXX-.005 ANGLES ±
DO NOT SCALE DRAWING

TREATMENT

FINISH

SIMILAR TO | ACT. WT | CALC WT

CONTRACT NO.

APPROVALS	DATE
DRAWN D. TOLAND	07/28/2009
CHECKED	
ISSUED	

FEDERAL AVIATION ADMINISTRATION
6500 S. MACARTHUR BLVD
OKLAHOMA CITY, OK 73169

TITLE COVER - DB-9

SIZE B | FSCM NO. | DWG NO. LRR-001118-0201

SCALE 2:1 | PART NO. | SHEET 1

CABLES/HARNESSES/WIRES PARTS LIST

DESCRIPTION	PART #	MANUFACTURER	TOTAL QUANTITY
Rotary Switch	44A30-02-3-03N	Grayhill	1
Knob, Dial Style,Pointer Bar Skirted	11K5028-KMNB	Grayhill	1
Cable, 7 Conductor, 24AWG, Quad Shield	9932	Belden	20'
Wire, Hook-Up, MIL-W-16878E, 22AWG, Stranded, TFE Jacket, White	5855-1	Alphawire	1851'
Wire, Hook-Up, MIL-W-16878E, 20AWG, Stranded, TFE Jacket, White	5856-1	Alphawire	1446.5'
Wire, Hook-Up, MIL-W-16878E, 14AWG, Stranded, TFE Jacket, White	5859-1	Alphawire	713.75'
Wire, Hook-Up, MIL-W-16878E, 14AWG, Stranded, TFE Jacket, Black	5859-2	Alphawire	49'
Wire, Hook-Up, MIL-W-16878E, 14AWG, Stranded, TFE Jacket, Green	5859-4	Alphawire	111.5'
Ring Terminal, Insulated, Nylon, 16AWG - 22AWG, Red, #6 Stud	RA18-6	Thomas & Betts	100
Ring Terminal, Insulated, Nylon, 14AWG - 18AWG, Blue, #4 Stud	RB14-4	Thomas & Betts	20
Ring Terminal, Insulated, Nylon, 14AWG - 18AWG, Blue, #6 Stud	RB14-6	Thomas & Betts	47
Ring Terminal, Insulated, Nylon, 14AWG - 18AWG, Blue, #10 Stud	RB14-10	Thomas & Betts	8
Ring Terminal, Insulated, Nylon, 14AWG - 18AWG, Blue, 1/4" Stud	RB14-14	Thomas & Betts	1
Quick Connect, Female, Insulated, Nylon, 14AWG - 18AWG, Blue	14RB-2577	Thomas & Betts	10
Quick Connect, Female, Insulated, Nylon, 16AWG - 22AWG, Red	18RA-2577	Thomas & Betts	2
Quick Connect, Male, Insulated, Nylon, 16AWG - 22AWG, Red	18RA-251T	Thomas & Betts	2
Contact, Electrical Connector, Socket, Crimp Removeable, 20AWG Wire	M39029/56-351		31
Contact, Electrical Connector, Pin, Crimp Removeable, 20AWG Wire	M39029/58-363		9
Contact, Electrical Connector, Socket, Crimp Removeable, 20AWG Wire	90119-2109	Molex	8
Housing, 4 Position, 0.100" Pitch	90156-0144	Molex	1
Housing, 8 Conductor Connector, 0.1" Spacing	90142-0008	Molex	2
Housing, 10 Conductor Connector, 2mm Dual Crimp	DF11-10DS-2C	Hirose	4
Crimp Terminal, 22-24AWG	DF11-22SC	Hirose	28
RJ45 Plug, VPI - CAT6 Shielded, Solid	6-PLG-SOLID-SH	VPI	2
VPI - CAT6 Cable, Solid Conductors, Twisted Pair, Shielded, Gray	CAT6-BULK-STP-SOL-GRAY	VPI	9'
RJ45 Protective Boot, Black	IT-RJ45B	CableOrganizer.com	2
Brady Labels, 125-175 Dimension, Yellow	PSPT-125-175YL	Brady	228
Brady Labels, 375-175 Dimension, Yellow	PSPT-375-175YL	Brady	4
Connector, DB15, Electric, Rectangular, Female Receptacle	M24308/2-2F		1
Contact, Electrical Connector, Socket, Crimp Removeable, 20AWG Wire	M39029/63-368		14
Connector, Circular, Electroless Nickel Finish, Female Box Mount Receptacle	D38999/20FD18SN		1
Connector, Circular, Electroless Nickel Finish, Female Box Mount Receptacle	D38999/20FD19SN		1
Connector, Circular, Electroless Nickel Finish, Female Box Mount Receptacle	D38999/20FD97SN		1

DIMENSIONS - INCHES

FEDERAL AVIATION ADMINISTRATION
6500 S. MACARTHUR BLVD - BLDG 001
OKLAHOMA CITY, OK 73169

POWER DISTRIBUTION UNIT
Cables/Harnesses Parts List

D | LRR-000067-0004 | A

SHEET 1 OF 1

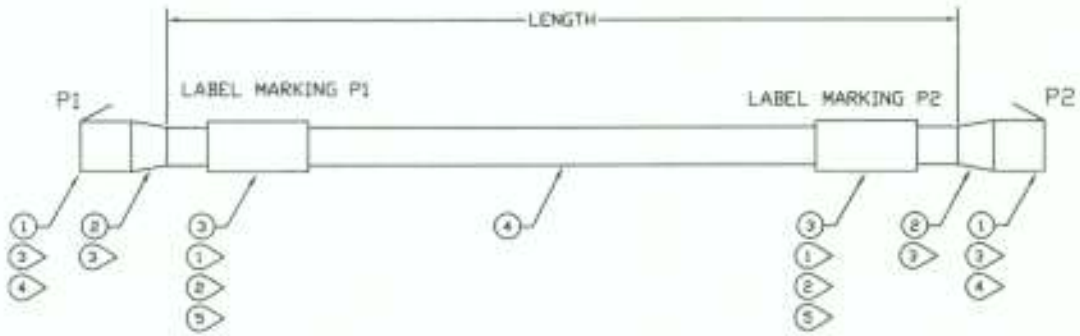

TABLE I				
PART NO.	LENGTH (IN)	NO. CONDUCTORS	LABEL MARKING P1	LABEL MARKING P2
W186	9	8	W186/A1A1-J1	W186/J4

NOTES:

1. MARK IN 0.12 INCH HIGH CHARACTERS
2. SHRINK TUBING PER MANUFACTURER INSTRUCTIONS
3. ASSEMBLE PER MANUFACTURER INSTRUCTIONS
4. WIRES TO BE ARRANGED FOR INSTERTION INTO CONNECTOR PER TIA/EIA 560A STANDARD
5. CABLE LABELS TO BE WITHIN 1 INCH OF APPROPRIATE CONNECTOR END

QTY.	PART NO.	DESCRIPTION	FIND NO.
SEE TABLE I	CAT6-BULK-STP-SD L-GRAY	VPI - CAT6, SOLID CONDUCTORS, TWISTED PAIR, SHIELDED, GRAY	4
2	PSPT-375-175YL	BRADY - PERMASLEEVE WIRE MARKER SLEEVE, HEATSHRINK	3
2	FMT718	BLACKBOX - RJ45 PROTECTIVE BOOT, BLACK	2
2	6-PLG-SOLID-SH	VPI - CAT6 SHIELDED SOLID RJ45 PLUG	1

DIMENSIONS - INCHES

FEDERAL AVIATION ADMINISTRATION
ARMY & NAVARTHUR BLVD - BLDG 207
OKLAHOMA CITY, OK 73169

POWER DISTRIBUTION UNIT
INDUCTOR
CAT6 TO CAT6

D | LRR-000067-0005 | A

SHEET 1 OF 1

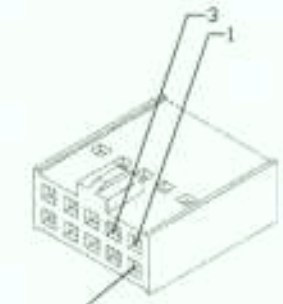

CONNECTOR P1 END VIEW (USING 8 PIN VERSION)

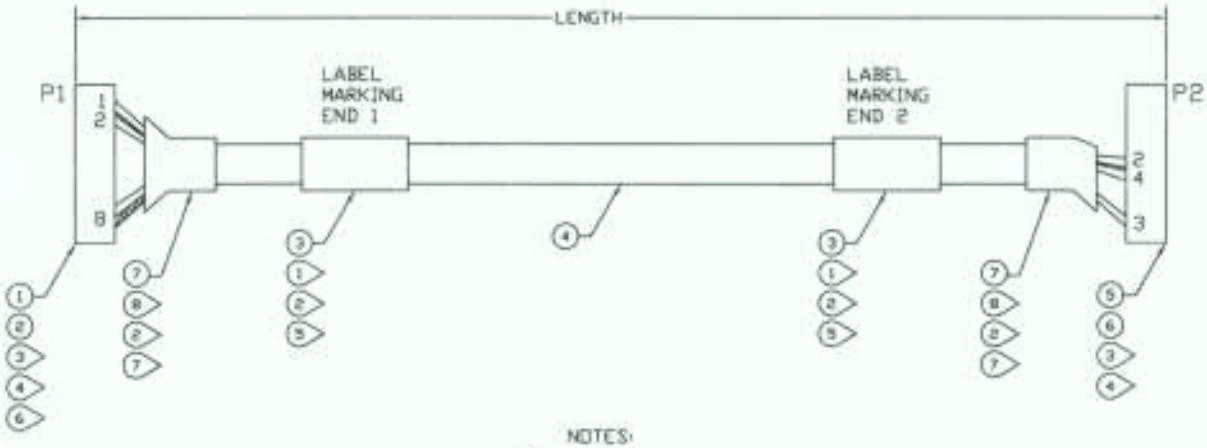

CONNECTOR P2 END VIEW

NOTES:

1. MARK IN 0.12 INCH HIGH CHARACTERS
2. SHRINK TUBING PER MANUFACTURER INSTRUCTIONS
3. CRIMP TERMINALS PER MANUFACTURER INSTRUCTIONS
4. ASSEMBLE PER MANUFACTURER INSTRUCTIONS
5. CABLE LABELS TO BE WITHIN 1 INCH OF APPROPRIATE CONNECTOR END
6. CRIMP THE BRAIDED CABLE SHIELD IN WITH THE BLACK WIRE
7. TRIM BACK UNUSED SHIELD AND INSULATION
8. CUT 0.75 INCHES OF HEATSHRINK AND PUSH UP NEXT TO THE P1 AND P2 CONNECTORS BEFORE SHRINKING

COLOR CODE TABLE II

CONNECTOR P1	CONNECTOR P2	COLOR CODE
PIN 1	PIN 2	RED
PIN 2	PIN 4	GREEN
PIN 8	PIN 3	BLACK

TABLE I

PART NO.	LENGTH (IN)	NO. CONDUCTORS	COLOR CODE TABLE	CONNECTOR P1	CONNECTOR P2	LABEL MARKING P1	LABEL MARKING P2
W187	10	7	II	90142-0008	DF11-10DS-2C	W187/A1-J5	W187/PS1-J2
W188	10	7	II	90142-0008	DF11-10DS-2C	W188/A1-J6	W188/PS2-J2

QTY.	PART NO.	DESCRIPTION	FIND NO.
SEE TABLE I	9930	BELDEN - CABLE, MULTI-CONDUCTOR, 7 CONDUCTOR, 24AWG, DUAL SHIELD	4
3"	ITP-301VW3/4"BLAB" BX	3M - HEATSHRINK TUBING, BLACK, 1/4"	7
2	PSPT-375-175YL	BRADY - PERMASLEEVE WIRE MARKER SLEEVE, HEATSHRINK	3
6	DF11-02SC	HIROSE - CRIMP TERMINAL, 22-24AWG	6
2	DF11-10DS-2C	HIROSE - HOUSING, 10 CONDUCTOR CONNECTOR	5
6	90129-0109	MOLEX - CRIMP TERMINAL, 22-24AWG	8
2	90142-0008	MOLEX - HOUSING, 8 CONDUCTOR CONNECTOR, 0.1 INCH SPACING	1

DIMENSIONS - INCHES

FEDERAL AVIATION ADMINISTRATION
4300 S. MACARTHUR BLVD - BLDG 207
OKLAHOMA CITY, OK 73169

POWER DISTRIBUTION UNIT
(DC TO DC)

DRAWN BY LT DRB 05/06/0000

SIZE D | FSCM NO. | DWG NO. LRR-000067-0006 | REV A

SCALE: NONE | SHEET 1 OF 1

CONNECTOR P2 (J3)
PIN END VIEW
SHOWN OPPOSITE
FOR SOCKETS

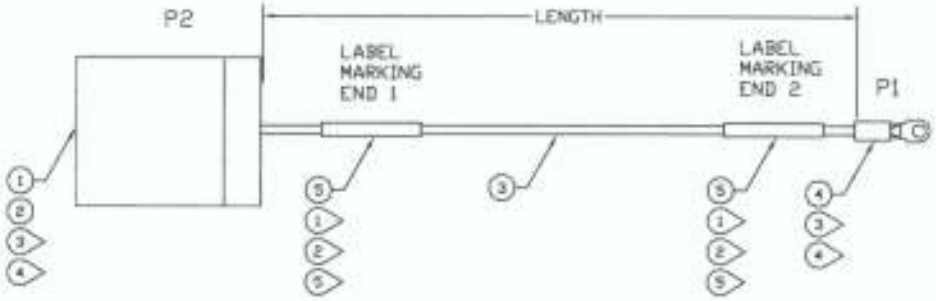

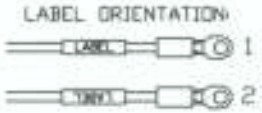

TABLE 1

PART NO.	LENGTH (IN)	WIRE	TERMINAL P1	LABEL MARKING P1	LABEL ORIENTATION	TERMINAL P2	LABEL MARKING P2	LABEL ORIENTATION
W53	26.5	5856-1	RA18-6	W53/A2T803-8	1	M39029/56-351	W53/J3-H	2
W54	26	5856-1	RA18-6	W54/A2T803-9	1	M39029/56-351	W54/J3-A	2
W92	29	5856-1	RA18-6	W92/A2T807-7	1	M39029/56-351	W92/J3-J	2
W93	28.5	5856-1	RA18-6	W93/A2T807-8	1	M39029/56-351	W93/J3-B	2
W122	27.5	5856-1	RA18-6	W122/A2T810-7	2	M39029/56-351	W122/J3-K	2
W123	27.5	5856-1	RA18-6	W123/A2T810-8	2	M39029/56-351	W123/J3-D	2

NOTES:

1. MARK IN 0.10 INCH HIGH CHARACTERS
2. SHRINK TUBING PER MANUFACTURER INSTRUCTIONS
3. CRIMP CONTACTS AND TERMINALS PER MANUFACTURER INSTRUCTIONS
4. ASSEMBLE PER MANUFACTURER INSTRUCTIONS
5. CABLE LABELS TO BE WITHIN 1 INCH OF APPROPRIATE CONNECTOR END

QTY.	PART NO.	DESCRIPTION	FIND NO.
12	PSPT-125-175YL	BRADY - PERMASLEEVE WIRE MARKER SLEEVE, HEATSHRINK	5
6	RA18-6	THOMAS & BETTS - TERMINAL, RING, INSULATED, NYLON, 16AWG - 22AWG, RED, #6 STUD	4
SEE TABLE 1	5856-1	ALPHAWIRE - HIGH-UP WIRE, MIL-W-16878E, 20AWG, STRANDED, TFE JACKET, WHITE	3
4	M39029/56-351	CONTACT, ELECTRICAL CONNECTOR, SOCKET, CRIMP REMOVEABLE, 20AWG WIRE	2
1	D38999/20FD57SN	CONNECTOR, ELECTRICAL, CIRCULAR, ELECTROLESS NICKEL FINISH, FEMALE BOX MOUNT RECEPTACLE	1

DIMENSIONS - INCHES

FEDERAL AVIATION ADMINISTRATION
6500 S. MACARTHUR BLVD - BLDG 227
OKLAHOMA CITY, OK 73169

LRR ENCODER REPLACEMENT
Power Distribution Unit
Common Socket for Ring Terminal (J3)

D | LRR-000067-0007 | A

SHEET 1 OF 1

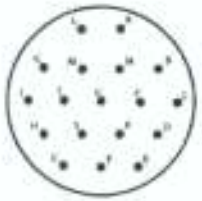

CONNECTOR P2 (J7)
PIN END VIEW
SHOWN OPPOSITE FOR
SOCKETS

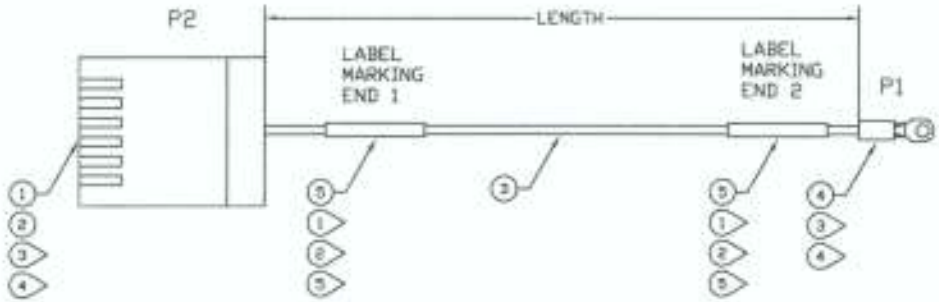

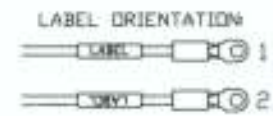

TABLE 1

PART NO.	LENGTH (IN)	WIRE	TERMINAL P1	LABEL MARKING P1	LABEL ORIENTATION	TERMINAL P2	LABEL MARKING P2	LABEL ORIENTATION
W41	29.5	5856-1	RA18-6	W41/A2TB02-6	2	M39029/56-351	W41/J7-A	1
W42	29	5856-1	RA18-6	W42/A2TB02-7	2	M39029/56-351	W42/J7-B	1
W79	27.5	5856-1	RA18-6	W79/A2TB06-4	2	M39029/56-351	W79/J7-F	1
W102	26.5	5856-1	RA18-6	W102/A2TB08-7	1	M39029/56-351	W102/J7-C	1
W104	26	5856-1	RA18-6	W104/A2TB08-9	1	M39029/56-351	W104/J7-D	1
W105	25	5856-1	RA18-6	W105/A2TB08-10	1	M39029/56-351	W105/J7-E	1
W119	24.5	5856-1	RA18-6	W119/A2TB10-4	2	M39029/56-351	W119/J7-K	1
W140	24.5	5856-1	RA18-6	W140/A2TB12-5	1	M39029/56-351	W140/J7-L	1
W138	24.5	5856-1	RA18-6	W138/A2TB12-3	1	M39029/56-351	W138/J7-H	1

NOTES:

1. MARK IN 0.10 INCH HIGH CHARACTERS
2. SHRINK TUBING PER MANUFACTURER INSTRUCTIONS
3. CRIMP CONTACTS AND TERMINALS PER MANUFACTURER INSTRUCTIONS
4. ASSEMBLE PER MANUFACTURER INSTRUCTIONS
5. CABLE LABELS TO BE WITHIN 1 INCH OF APPROPRIATE CONNECTOR END

QTY.	PART NO.	DESCRIPTION	FIND NO.
18	PSPT-125-175YL	BRADY - PERMASLEEVE WIRE MARKER SLEEVE, HEATSHRINK	5
9	RA18-6	THOMAS & BETTS - TERMINAL, RING, INSULATED, NYLON, 16AWG - 22AWG, RED, #6 STUB	4
SEE TABLE 1	5856-1	ALPHAWIRE - HOOK-UP WIRE, MIL-W-16878E, 20AWG, STRANDED, TFE JACKET, WHITE	3
9	M39029/56-351	CONTACT, ELECTRICAL, CONNECTOR, PIN, CRIMP REMOVEABLE, 20AWG WIRE	2
1	D38999/20FD18SN	CONNECTOR, ELECTRICAL, CIRCULAR, SHELL SIZE 23, INSERT ARRANGEMENT 53, ELECTROLESS NICKEL FINISH, MALE BOX MOUNT RECEPTACLE	1

DIMENSIONS - INCHES

FEDERAL AVIATION ADMINISTRATION
6500 S. MACARTHUR BLVD - BLDG 207
OKLAHOMA CITY, OK 73169

LRR ENCODER REPLACEMENT
Power Distribution Unit
Connor Socket to Bing Terminal (J7)

D | LRR-000067-0008 | A

SHEET 1 OF 1

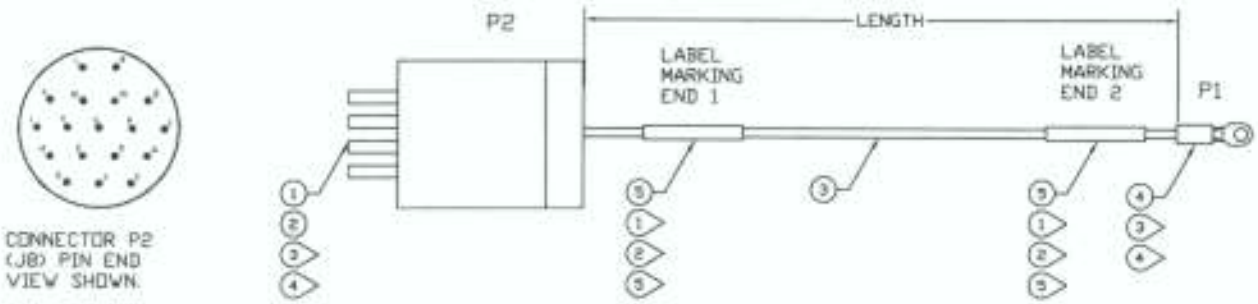

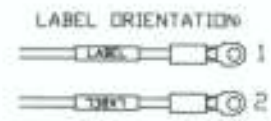

TABLE 1

PART NO.	LENGTH (IN)	WIRE	TERMINAL P1	LABEL MARKING P1	LABEL ORIENTATION	TERMINAL P2	LABEL MARKING P2	LABEL ORIENTATION
W80	25.5	5856-1	RA18-6	W80/A2TB06-5	2	M39029/58-363	W80/J8-F	1
W100	25.5	5856-1	RA18-6	W100/A2TB08-5	1	M39029/58-363	W100/J8-E	1
W120	22.5	5856-1	RA18-6	W120/A2TB10-5	2	M39029/58-363	W120/J8-K	1
W124	21.5	5856-1	RA18-6	W124/A2TB10-9	2	M39029/58-363	W124/J8-C	1
W125	21	5856-1	RA18-6	W125/A2TB10-10	2	M39029/58-363	W125/J8-D	1
W139	23	5856-1	RA18-6	W139/A2TB12-4	1	M39029/58-363	W139/J8-H	1
W141	22.5	5856-1	RA18-6	W141/A2TB12-6	1	M39029/58-363	W141/J8-L	1
W43	27.5	5856-1	RA18-6	W43/A2TB02-8	2	M39029/58-363	W43/J8-A	1
W44	27.5	5856-1	RA18-6	W44/A2TB02-9	2	M39029/58-363	W44/J8-B	1

NOTES:

1. MARK IN 0.10 INCH HIGH CHARACTERS
2. SHRINK TUBING PER MANUFACTURER INSTRUCTIONS
3. CRIMP CONTACTS AND TERMINALS PER MANUFACTURER INSTRUCTIONS
4. ASSEMBLE PER MANUFACTURER INSTRUCTIONS
5. CABLE LABELS TO BE WITHIN 1 INCH OF APPROPRIATE CONNECTOR END

QTY.	PART NO.	DESCRIPTION	FIND NO.
18	PSPT-125-175YL	BRADY - PERMASLEEVE WIRE MARKER SLEEVE, HEATSHRINK	5
9	RA18-6	THOMAS & BETTS - TERMINAL, RING, INSULATED, NYLON, 16AWG - 22AWG, RED, #6 STUD	4
SEE TABLE 1	5856-1	ALPHAWIRE - HOOK-UP WIRE, MIL-W-16878E, 20AWG, STRANDED, TFE JACKET, WHITE	3
9	M39029/58-363	CONTACT, ELECTRICAL CONNECTOR, PIN, CRIMP REMOVEABLE, 20AWG WIRE	2
1	[illegible]	CONNECTOR, ELECTRICAL, CIRCULAR, ELECTROLESS NICKEL FINISH, MALE BOX MOUNT RECEPTACLE	1

DIMENSIONS - INCHES

FEDERAL AVIATION ADMINISTRATION
[illegible] S. MACARTHUR BLVD - BLDG 207
OKLAHOMA CITY, OK 73169

LRR ENCODER REPLACEMENT
Power Distribution Unit
Custom Fin to Ring Terminal [illegible]

D | LRR-000067-0009 | A

SHEET 1 OF 1

CONNECTOR P2 (J9)
PIN END VIEW
SHOWN. OPPOSITE
FOR SOCKETS.

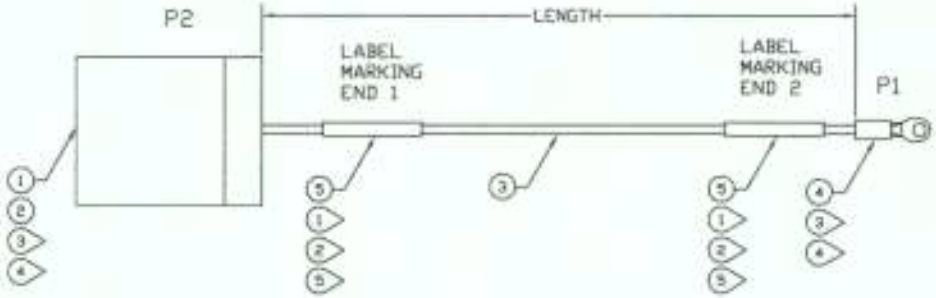

LABEL ORIENTATION:

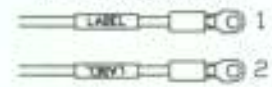

TABLE 1

PART NO.	LENGTH (IN)	WIRE	TERMINAL P1	LABEL MARKING P1	LABEL ORIENTATION	TERMINAL P2	LABEL MARKING P2	LABEL ORIENTATION
W81	23.5	5856-1	RA18-6	W81/A2TB13-6	2	M39029/56-351	W81/J9-A	1
W82	23	5856-1	RA18-6	W82/A2TB13-7	2	M39029/56-351	W82/J9-B	1
W83	22.5	5856-1	RA18-6	W83/A2TB13-8	2	M39029/56-351	W83/J9-C	1
W84	22	5856-1	RA18-6	W84/A2TB13-9	2	M39029/56-351	W84/J9-D	1
W62	27	5856-1	RA18-6	W62/A2TB04-7	1	M39029/56-351	W62/J9-G	1
W63	26.5	5856-1	RA18-6	W63/A2TB04-8	1	M39029/56-351	W63/J9-H	1
W64	26	5856-1	RA18-6	W64/A2TB04-9	1	M39029/56-351	W64/J9-J	1
W65	25.5	5856-1	RA18-6	W65/A2TB04-10	1	M39029/56-351	W65/J9-K	1

NOTES:

1. MARK IN 0.10 INCH HIGH CHARACTERS
2. SHRINK TUBING PER MANUFACTURER INSTRUCTIONS
3. CRIMP CONTACTS AND TERMINALS PER MANUFACTURER INSTRUCTIONS
4. ASSEMBLE PER MANUFACTURER INSTRUCTIONS
5. CABLE LABELS TO BE WITHIN 1 INCH OF APPROPRIATE CONNECTOR END

QTY.	PART NO.	DESCRIPTION	FIND NO.
16	PSPT-125-175YL	BRADY - PERMASLEEVE WIRE MARKER SLEEVE, HEATSHRINK	5
8	RA18-6	THOMAS & BETTS - TERMINAL, RING, INSULATED, NYLON, 16AWG - 20AWG, RED, #6 STUD	4
SEE TABLE I	5856-1	ALPHAWIRE - HOOK-UP WIRE, MIL-W-16878E, 20AWG, STRANDED, TFE JACKET, WHITE	3
8	M39029/56-351	CONTACT, ELECTRICAL, CONNECTOR, SOCKET, CRIMP REMOVEABLE, 20AWG WIRE	2
1	D38999/20FD19SN	CONNECTOR, ELECTRICAL, CIRCULAR, ELECTROLESS NICKEL FINISH, FEMALE BOX MOUNT RECEPTACLE	1

DIMENSIONS - INCHES

FEDERAL AVIATION ADMINISTRATION
6500 S. MACARTHUR BLVD - BLDG 207
OKLAHOMA CITY, OK 73169

LRR ENCODER REPLACEMENT
Power Distribution Unit
Common Socket to Ring Terminal LRR

D | LRR-000067-0010 | A

SHEET 1 OF 1

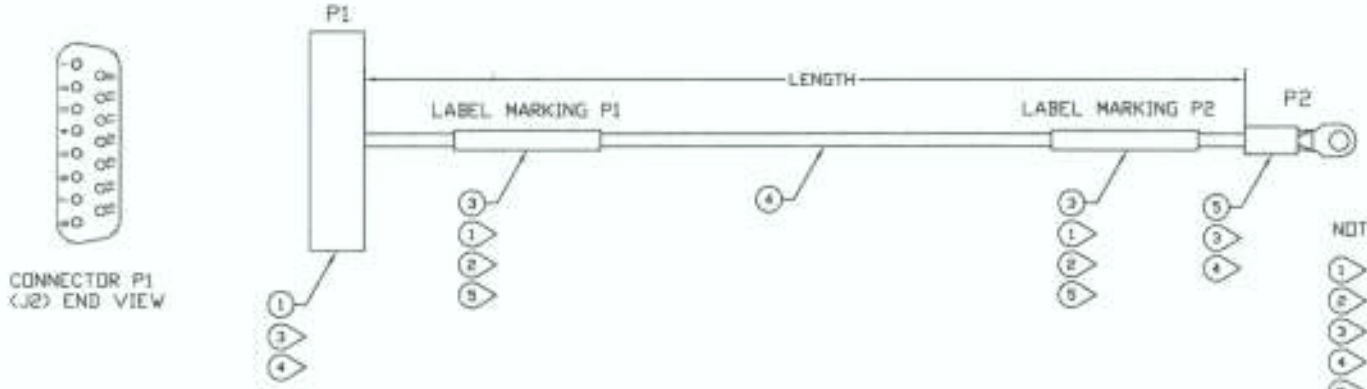

NOTES:

1. MARK IN 0.10 INCH HIGH CHARACTERS
2. SHRINK TUBING PER MANUFACTURER INSTRUCTIONS
3. CRIMP CONTACTS PER MANUFACTURER INSTRUCTIONS
4. ASSEMBLE PER MANUFACTURER INSTRUCTIONS
5. CABLE LABELS TO BE WITHIN 1 INCH OF APPROPRIATE CONNECTOR END

TABLE 1

PART NO.	LENGTH (IN)	TERMINAL P1	LABEL MARKING P1	LABEL ORIENTATION	TERMINAL P2	LABEL MARKING P2	LABEL ORIENTATION
W38	22	M39029/63-368	W38/J2-2	2	RA18-6	W38/A2TB02-3	2
W39	21.5	M39029/63-368	W39/J2-8	2	RA18-6	W39/A2TB02-4	2
W40	21	M39029/63-368	W40/J2-10	2	RA18-6	W40/A2TB02-5	2
W55	23.5	M39029/63-368	W55/J2-7	2	RA18-6	W55/A2TB03-10	1
W78	25	M39029/63-368	W78/J2-1	2	RA18-6	W78/A2TB06-3	2
W94	27	M39029/63-368	W94/J2-9	2	RA18-6	W94/A2TB07-9	1
W101	23	M39029/63-368	W101/J2-4	2	RA18-6	W101/A2TB08-6	1
W103	22.5	M39029/63-368	W103/J2-6	2	RA18-6	W103/A2TB08-8	1
W121	26.5	M39029/63-368	W121/J2-3	2	RA18-6	W121/A2TB10-6	2
W137	28	M39029/63-368	W137/J2-5	2	RA18-6	W137/A2TB12-2	1
W155	32	M39029/63-368	W155/J2-11	2	RA18-6	W155/A2TB13-10	2
W162	29	M39029/63-368	W162/J2-12	2	RA18-6	W162/A2TB14-7	2
W176	31	M39029/63-368	W176/J2-13	2	RA18-6	W176/A2TB16-1	1
W185	27.5	M39029/63-368	W185/J2-14	2	RA18-6	W185/A2TB16-10	1

QTY.	PART NO.	DESCRIPTION	FIND NO.
14	RA18-6	THOMAS & BETTS - TERMINAL, RING, INSULATED, NYLON, 16AWG-22AWG, RED, #6 STUD	5
SEE TABLE 1	5856-1	ALPHAWIRE - HOOK-UP WIRE, MIL-W-16878E, 20AWG, STRANDED, TFE JACKET, WHITE	4
28	PSPT-125-175YL	BRADY - PERMASLEEVE WIRE MARKER SLEEVE, HEATSHRINK	3
14	M39029/63-368	CONTACT, ELECTRICAL, CONNECTOR, SOCKET, CRIMP REMOVEABLE, 20AWG WIRE	2
1	M24300/2-2F	CONNECTOR, ELECTRIC, RECTANGULAR, FEMALE RECEPTACLE	1

DIMENSIONS - INCHES

FEDERAL AVIATION ADMINISTRATION
6500 S. MACARTHUR BLVD - BLDG 207
OKLAHOMA CITY, OK 73169

LRR ENCODER REPLACEMENT
POWER DISTRIBUTION UNIT
DB CONNECTOR TO RING

SIZE D | CODE IDENT NO. | DWG NO. LRR-000067-0011 | REV A

SCALE NONE | SHEET 1 OF 1

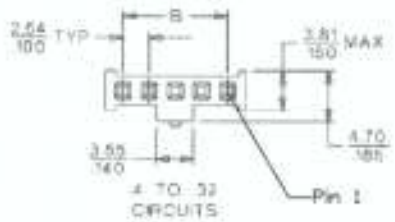

CONNECTOR P2
END VIEW

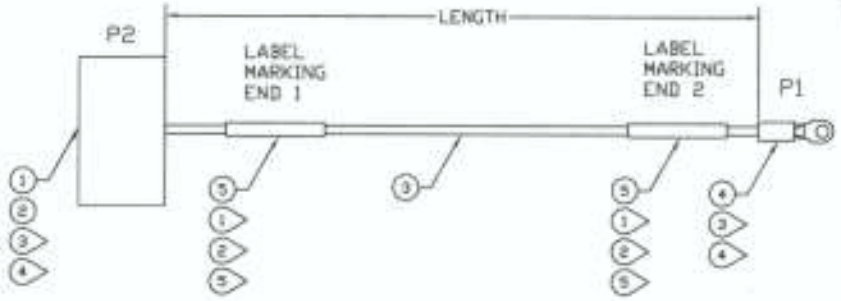

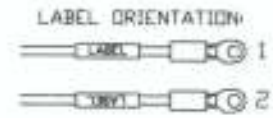

TABLE 1

PART NO.	LENGTH	WIRE	TERMINAL P1	LABEL MARKING P1	LABEL ORIENTATION	TERMINAL P2	LABEL MARKING P2	LABEL ORIENTATION
W77	29	5855-1	RA18-6	W77/A2TB06-2	2	90119-2109	W77/A1J3-1/+5	2
W145	29	5855-1	RA18-6	W145/A2TB12-10	1	90119-2109	W145/A1J3-2/GND	2

NOTES:

1. MARK IN 0.10 INCH HIGH CHARACTERS
2. SHRINK TUBING PER MANUFACTURER INSTRUCTIONS
3. CRIMP CONTACTS AND TERMINALS PER MANUFACTURER INSTRUCTIONS
4. ASSEMBLE PER MANUFACTURER INSTRUCTIONS
5. CABLE LABELS TO BE WITHIN 1 INCH OF APPROPRIATE CONNECTOR END

QTY.	PART NO.	DESCRIPTION	FIND NO.
4	PSP7-125-175YL	BRADY - PERMASLEEVE WIRE MARKER SLEEVE, HEATSHRINK	5
2	RA18-6	THOMAS & BETTS - TERMINAL, RING, INSULATED, NYLON, 16AWG - 22AWG, RED, #6 STUD	4
SEE TABLE 1	5855-1	ALPHAWIRE - HOOK-UP WIRE, MIL-W-16878E, 22AWG, STRANDED, TFE JACKET, WHITE	3
2	90119-2109	CONTACT, ELECTRICAL, CONNECTOR, SOCKET, CRIMP REMOVEABLE, 20AWG WIRE	2
1	90256-0144	MOLEX HOUSING, 4 POSITION, 0.100" PITCH	1

DIMENSIONS - INCHES

FEDERAL AVIATION ADMINISTRATION
6500 S. MACARTHUR BLVD - BLDG 207
OKLAHOMA CITY, OK 73169

LRR ENCODER REPLACEMENT
Power Distribution Unit
Ring To Housing A1J3

D | LRR-000067-0012 | A

SHEET 1 OF 1

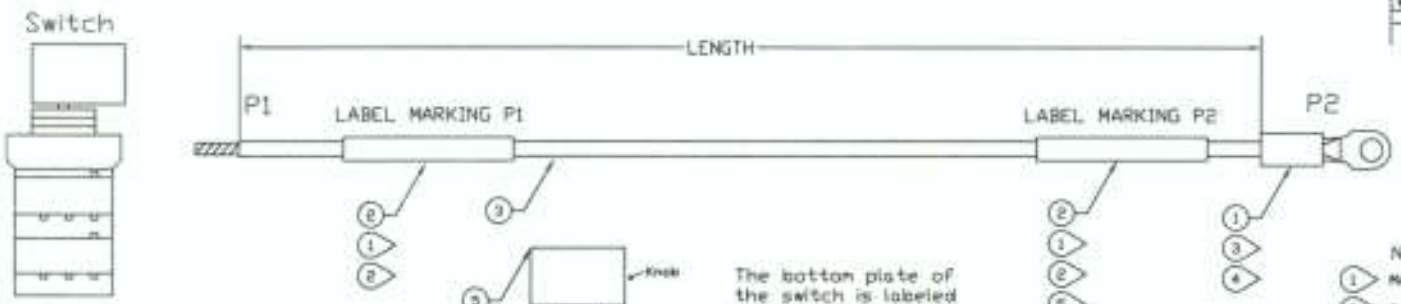

Instructions:
1. End P1 is at the switch.
2. Strip end P1 approximately 0.25 inch.
3. Bend end P1 into an open loop.
4. Solder end P1 to the pin on the switch indicated by the chart.
5. Slide label on end P1 up to post. Apply heat to shrink label.
6. Slide label for end P2 over wire.
7. Crimp RA18-6 to end P2.
8. Slide label for end 2 up to within 1 inch of the ring terminal. Apply heat to shrink label.

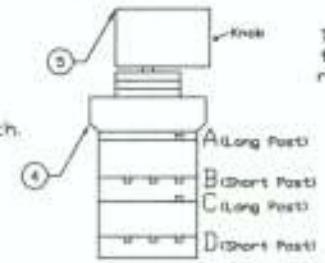

Viewed from side of switch.

The bottom plate of the switch is labeled radially from 1 to 12.

Viewed from bottom of switch.

NOTES:
1. MARK IN 0.10 INCH HIGH CHARACTERS
2. SHRINK TUBING PER MANUFACTURER INSTRUCTIONS
3. CRIMP TERMINALS PER MANUFACTURER INSTRUCTIONS
4. ASSEMBLE PER MANUFACTURER INSTRUCTIONS
5. CABLE LABELS TO BE WITHIN 1 INCH OF APPROPRIATE CONNECTOR END

LABEL ORIENTATION:

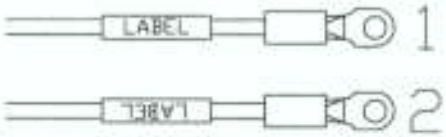

TABLE 1

PART NO.	LENGTH (IN)	TERMINAL P1	LABEL MARKING P1	LABEL ORIENTATION	TERMINAL P2	LABEL MARKING P2	LABEL ORIENTATION
W18	21	ROTARY SWITCH	W18/SW1-1A	1	RA18-6	W18/A3-3	1
W19	19	ROTARY SWITCH	W19/SW1-1C	1	RA18-6	W19/A7-3	1
W20	18.5	ROTARY SWITCH	W20/SW1-5A	1	RA18-6	W20/A6-3	1
W21	13.5	ROTARY SWITCH	W21/SW1-5C	1	RA18-6	W21/A5-3	1
W22	17	ROTARY SWITCH	W22/SW1-9A	1	RA18-6	W22/A4-3	1
W23	11	ROTARY SWITCH	W23/SW1-9C	1	RA18-6	W23/A8-3	1
W47	63.5	ROTARY SWITCH	W47/SW1-6B	1	RA18-6	W47/A2TB03-2	1
W49	63.75	ROTARY SWITCH	W49/SW1-7B	1	RA18-6	W49/A2TB03-4	1
W50	64	ROTARY SWITCH	W50/SW1-5B	1	RA18-6	W50/A2TB03-5	1
W67	60	ROTARY SWITCH	W67/SW1-2B	1	RA18-6	W67/A2TB05-2	2
W69	61	ROTARY SWITCH	W69/SW1-3B	1	RA18-6	W69/A2TB05-4	2
W70	61.5	ROTARY SWITCH	W70/SW1-1B	1	RA18-6	W70/A2TB05-5	2
W87	66.5	ROTARY SWITCH	W87/SW1-2D	1	RA18-6	W87/A2TB07-2	1
W89	61	ROTARY SWITCH	W89/SW1-3D	1	RA18-6	W89/A2TB07-4	1
W90	61.5	ROTARY SWITCH	W90/SW1-1D	1	RA18-6	W90/A2TB07-5	1
W107	57.5	ROTARY SWITCH	W107/SW1-10B	1	RA18-6	W107/A2TB09-2	2
W109	58	ROTARY SWITCH	W109/SW1-11B	1	RA18-6	W109/A2TB09-4	2
W110	58.5	ROTARY SWITCH	W110/SW1-9B	1	RA18-6	W110/A2TB09-5	2
W127	57.5	ROTARY SWITCH	W127/SW1-6D	1	RA18-6	W127/A2TB11-2	1
W129	58	ROTARY SWITCH	W129/SW1-7D	1	RA18-6	W129/A2TB11-4	1
W130	58.5	ROTARY SWITCH	W130/SW1-5D	1	RA18-6	W130/A2TB11-5	1
W147	55	ROTARY SWITCH	W147/SW1-10D	1	RA18-6	W147/A2TB13-2	2
W149	56	ROTARY SWITCH	W149/SW1-11D	1	RA18-6	W149/A2TB13-4	2
W150	56.5	ROTARY SWITCH	W150/SW1-9D	1	RA18-6	W150/A2TB13-5	2

QTY.	PART NO.	DESCRIPTION	FIND NO.
SEE TABLE 1	5855-1	ALPHAWIRE - HOOK-UP WIRE, MIL-W-16878E, 20AWG, STRANDED, TFE JACKET, WHITE	3
1	1X5020-10WB	GRAYHILL - KNOB FOR ROTARY SWITCH - BLACK	5
1	44A36-02-3-03N	GRAYHILL - ROTARY SWITCH - 3 POS. - 6 THROW - 3 POLE	4
24	RA18-6	THOMAS & BETTS - TERMINAL, RING INSULATED, NYLON, 20AWG - 22AWG, RED, #6 STUD	1
48	PSPT-125-175YL	BRADY - PERMASLEEVE WIRE MARKER SLEEVE, HEATSHRINK	2

DIMENSIONS - INCHES

FEDERAL AVIATION ADMINISTRATION
6500 S. MACARTHUR BLVD - MAIL DIT
OKLAHOMA CITY, OK 73169

LRR ENCODER REPLACEMENT
POWER DISTRIBUTION UNIT
ROTARY SWITCH

SIZE D | FSCM NO. | DWG NO. LRR-000067-0013 | REV A

SHEET 1 OF 1

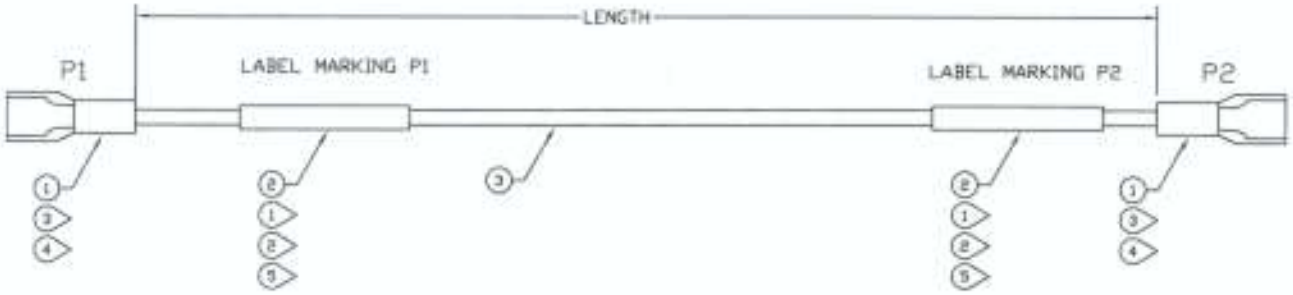

NOTES:

1. MARK IN 0.10 INCH HIGH CHARACTERS
2. SHRINK TUBING PER MANUFACTURER INSTRUCTIONS
3. CRIMP TERMINALS PER MANUFACTURER INSTRUCTIONS
4. ASSEMBLE PER MANUFACTURER INSTRUCTIONS
5. CABLE LABELS TO BE WITHIN 1 INCH OF APPROPRIATE CONNECTOR END

TABLE 1

PART NO.	LENGTH (IN)	WIRE	TERMINAL P1	LABEL MARKING P1	LABEL ORIENTATION	TERMINAL P2	LABEL MARKING P2	LABEL ORIENTATION
W24	5	5859-2	14RB-2577	W24/SW2-2	2	14RB-2577	W24/FL1-H	1
W25	4.5	5859-2	14RB-2577	W25/SW3-2	2	14RB-2577	W25/FL2-H	1

LABEL ORIENTATION

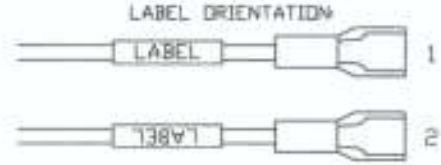

QTY.	PART NO.	DESCRIPTION	FIND NO.
SEE TABLE 1	5859-2	ALPHAWIRE - HOOK-UP WIRE, MIL-W-16878K, 14AWG, STRANDED, TFE JACKET, BLACK	3
4	14RB-2577	THOMAS & BETTS - QUICK CONNECT, FEMALE, INSULATED, NYLON, 14AWG - 16AWG, BLUE	1
4	PSPT-125-175YL	BRADY - PERMASLEEVE WIRE MARKER SLEEVE, HEATSHRINK	2

DIMENSIONS - INCHES

FEDERAL AVIATION ADMINISTRATION
4500 S. MACARTHUR BLVD - BLDG 207
OKLAHOMA CITY, OK 73169

LRR ENCODER REPLACEMENT
POWER DISTRIBUTION UNIT
FEMALE DISCONNECT TO FEMALE DISCONNECT 14AWG

D | LRR-000067-0014 | A

SHEET 1 OF 1

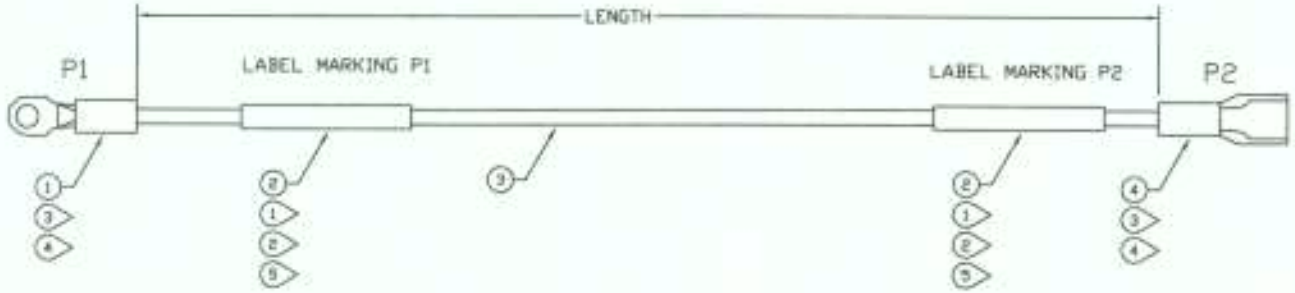

NOTES:

1. MARK IN 0.10 INCH HIGH CHARACTERS
2. SHRINK TUBING PER MANUFACTURER INSTRUCTIONS
3. CRIMP TERMINALS PER MANUFACTURER INSTRUCTIONS
4. ASSEMBLE PER MANUFACTURER INSTRUCTIONS
5. CABLE LABELS TO BE WITHIN 1 INCH OF APPROPRIATE CONNECTOR END

TABLE 1

PART NO.	LENGTH (IN)	WIRE	TERMINAL P1	LABEL MARKING P1	LABEL ORIENTATION	TERMINAL P2	LABEL MARKING P2	LABEL ORIENTATION
W1	10	5859-2	RB14-6	W1/TB1-1	2	14RB-2577	W1/SW3-1	1
W4	10	5859-1	RB14-6	W4/TB1-3	2	14RB-2577	W4/FL2-N	2
W6	9	5859-4	RB14-6	W6/TB1-5	2	14RB-2577	W6/FL2-PE	1
W9	10.5	5859-4	RB14-6	W9/TB1-7	2	14RB-2577	W9/FL1-PE	1
W12	13	5859-1	RB14-6	W12/TB1-10	2	14RB-2577	W12/FL1-N	2
W13	12.5	5859-2	RB14-6	W13/TB1-12	2	14RB-2577	W13/SW2-1	1
W156	28.5	5856-1	RA18-6	W156/A2TB14-1	2	18RA-2577	W156/MF1-(+)	2
W165	25	5856-1	RA18-6	W165/A2TB14-10	2	18RA-2577	W165/MF1-(-)	2

LABEL ORIENTATION

QTY.	PART NO.	DESCRIPTION	FIND NO.
SEE TABLE 1	5859-1	ALPHAWIRE - HOOK-UP WIRE, MIL-W-16878E, 14AWG, STRANDED, TFE JACKET, WHITE	3
SEE TABLE 1	5859-2	ALPHAWIRE - HOOK-UP WIRE, MIL-W-16878E, 14AWG, STRANDED, TFE JACKET, BLACK	3
SEE TABLE 1	5859-4	ALPHAWIRE - HOOK-UP WIRE, MIL-W-16878E, 14AWG, STRANDED, TFE JACKET, GREEN	3
SEE TABLE 1	5856-1	ALPHAWIRE - HOOK-UP WIRE, MIL-W-16878E, 20AWG, STRANDED, TFE JACKET, WHITE	3
2	RA18-6	THOMAS & BETTS - TERMINAL, RING, INSULATED, NYLON, 16AWG - 20AWG, RED, #6 STUD	1
6	RB14-6	THOMAS & BETTS - TERMINAL, RING, INSULATED, NYLON, 14AWG - 18AWG, BLUE, #6 STUD	1
6	14RB-2577	THOMAS & BETTS - QUICK CONNECT, FEMALE, INSULATED, NYLON, 14AWG - 18AWG, BLUE	4
2	18RA-2577	THOMAS & BETTS - QUICK CONNECT, FEMALE, INSULATED, NYLON, 16AWG - 20AWG, RED	4
16	PSPT-125-175YL	BRADY - PERMASLEEVE WIRE MARKER SLEEVE, HEATSHRINK	2

DIMENSIONS - INCHES

FEDERAL AVIATION ADMINISTRATION
6500 S. MACARTHUR BLVD - BLDG 207
OKLAHOMA CITY, OK 73169

LRR ENCODER REPLACEMENT
POWER DISTRIBUTION UNIT
RING TERMINAL TO RING TERMINAL 14AWG

D | LRR-000067-0015 | A

SHEET 1 OF 1

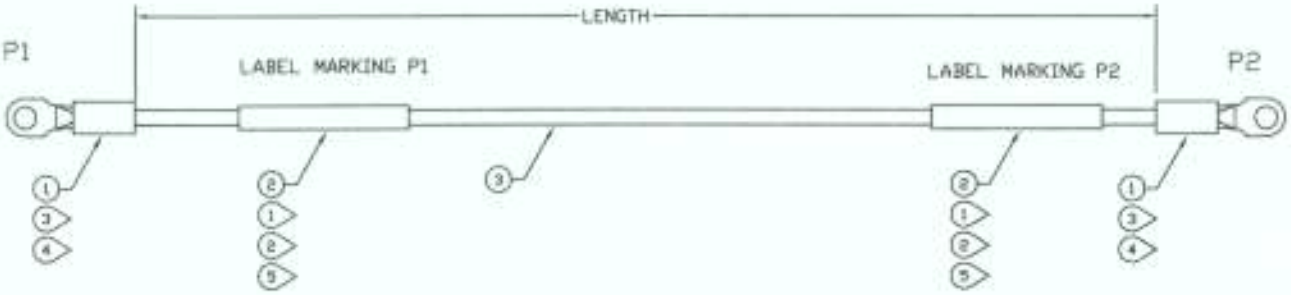

NOTES:

1. MARK IN 0.10 INCH HIGH CHARACTERS
2. SHRINK TUBING PER MANUFACTURER INSTRUCTIONS
3. CRIMP TERMINALS PER MANUFACTURER INSTRUCTIONS
4. ASSEMBLE PER MANUFACTURER INSTRUCTIONS
5. CABLE LABELS TO BE WITHIN 1 INCH OF APPROPRIATE CONNECTOR END

LABEL ORIENTATION:

QTY.	PART NO.	DESCRIPTION	FIND NO.
SEE TABLE I	5859-1	ALPHAWIRE - HOOK-UP WIRE, MIL-W-16878E, 20AWG, STRANDED, TFE JACKET, WHITE	3
SEE TABLE I	5859-1	ALPHAWIRE - HOOK-UP WIRE, MIL-W-16878E, 24AWG, STRANDED, TFE JACKET, WHITE	3
SEE TABLE I	5859-2	ALPHAWIRE - HOOK-UP WIRE, MIL-W-16878E, 24AWG, STRANDED, TFE JACKET, BLACK	3
SEE TABLE I	5859-4	ALPHAWIRE - HOOK-UP WIRE, MIL-W-16878E, 24AWG, STRANDED, TFE JACKET, GREEN	3
26	RA29-6	THOMAS & BETTS - TERMINAL, RING, INSULATED, NYLON, 18AWG-22AWG, RED, #6 STUD	1
29	RB14-4	THOMAS & BETTS - TERMINAL, RING, INSULATED, NYLON, 14AWG - 16AWG, BLUE, #4 STUD	1
41	RB14-6	THOMAS & BETTS - TERMINAL, RING, INSULATED, NYLON, 14AWG - 16AWG, BLUE, #6 STUD	1
8	RB14-10	THOMAS & BETTS - TERMINAL, RING, INSULATED, NYLON, 14AWG - 16AWG, BLUE, #10 STUD	1
1	RB14-14	THOMAS & BETTS - TERMINAL, RING, INSULATED, NYLON, 14AWG - 16AWG, BLUE, 1/4 STUD	1
96	PSPT-125-(7)YL	BRADY - PERMASLEEVE WIRE MARKER SLEEVE, HEATSHRINK	2

UNLESS OTHERWISE SPECIFIED DIMENSIONS - INCHES

FEDERAL AVIATION ADMINISTRATION
6500 S. MACARTHUR BLVD - BLDG 207
OKLAHOMA CITY, OK 73169

LRR ENCODER REPLACEMENT

POWER DISTRIBUTION UNIT
RING TERMINAL TO RING TERMINAL

DRAWN BY: STEVE 04/26/2006
SIZE: D
REV. NO.:
DWG NO.: LRR-000067-0016
REV: B
SCALE: NONE
SHEET 1 OF 2

TABLE 1

PART NO.	LENGTH (IN)	WIRE	TERMINAL P1	LABEL MARKING P1	LABEL ORIENTATION	TERMINAL P2	LABEL MARKING P2	LABEL ORIENTATION
W146	20	5859-1	RB14-6	W146/A2TB13-1	2	RB14-10	W146/PS1/+24V	2
W148	26.25	5859-1	RB14-6	W148/A2TB13-3	2	RB14-10	W148/PS2/+24V	2
W26	13	5859-1	RB14-6	W26/A2TB01-1	2	RB14-10	W26/PS1/+5V_RET	2
W29	17.75	5859-1	RB14-6	W29/A2TB01-4	2	RB14-10	W29/PS2/+5V_RET	2
W37	18.5	5859-1	RB14-6	W37/A2TB02-2	2	RB14-10	W37/PS1/+24V_RET	2
W66	14.5	5859-1	RB14-6	W66/A2TB05-1	2	RB14-10	W66/PS1/+5V	2
W68	28.25	5859-1	RB14-6	W68/A2TB05-3	2	RB14-10	W68/PS2/+5V	2
W99	24.75	5859-1	RB14-6	W99/A2TB08-4	1	RB14-10	W99/PS2/+24V_RET	2
W5	7	5859-4	RB14-6	W5/TB1-5	1	RB14-14	W5/GND-STUD	2
W106	19.75	5859-1	RB14-6	W106/A2TB09-1	2	RB14-4	W106/PS1/+15V	2
W108	25.75	5859-1	RB14-6	W108/A2TB09-3	2	RB14-4	W108/PS2/+15V	2
W126	20	5859-1	RB14-6	W126/A2TB11-1	1	RB14-4	W126/PS1/-15V	2
W128	26	5859-1	RB14-6	W128/A2TB11-3	1	RB14-4	W128/PS2/-15V	2
W166	21	5859-1	RB14-6	W166/A2TB15-1	1	RB14-4	W166/PS1/+12V_REF	2
W168	27.5	5859-1	RB14-6	W168/A2TB15-3	1	RB14-4	W168/PS2/+12V_REF	2
W177	26.75	5859-1	RB14-6	W177/A2TB16-2	1	RB14-4	W177/PS1/+12V_REF_RET	2
W178	32	5859-1	RB14-6	W178/A2TB16-3	1	RB14-4	W178/PS2/+12V_REF_RET	2
W27	13	5859-1	RB14-6	W27/A2TB01-2	2	RB14-4	W27/PS1/+12V_RET	2
W28	13.5	5859-1	RB14-6	W28/A2TB01-3	2	RB14-4	W28/PS1/-12V_RET	2
W30	28.25	5859-1	RB14-6	W30/A2TB01-5	2	RB14-4	W30/PS2/+12V_RET	2
W31	28.75	5859-1	RB14-6	W31/A2TB01-6	2	RB14-4	W31/PS2/-12V_RET	2
W35	18.5	5859-1	RB14-6	W35/A2TB01-10	2	RB14-4	W35/PS1/+15V_RET	2
W36	19.5	5859-1	RB14-6	W36/A2TB02-1	2	RB14-4	W36/PS1/-15V_RET	2
W46	13.5	5859-1	RB14-6	W46/A2TB03-1	1	RB14-4	W46/PS1/+12V	2
W48	19.75	5859-1	RB14-6	W48/A2TB03-3	1	RB14-4	W48/PS2/+12V	2
W86	15.75	5859-1	RB14-6	W86/A2TB07-1	1	RB14-4	W86/PS1/-12V	2
W88	21.5	5859-1	RB14-6	W88/A2TB07-3	1	RB14-4	W88/PS2/-12V	2
W97	27.25	5859-1	RB14-6	W97/A2TB08-2	1	RB14-4	W97/PS2/+15V_RET	2
W98	27.25	5859-1	RB14-6	W98/A2TB08-3	1	RB14-4	W98/PS2/-15V_RET	2
W10	16	5859-4	RB14-6	W10/TB1-7	1	RB14-6	W10/PS1-PE	1
W11	14.5	5859-1	RB14-6	W11/TB1-10	1	RB14-6	W11/PS1-N	1
W14	13.5	5859-2	RB14-6	W14/TB1-12	1	RB14-6	W14/PS1-H	1
W2	12	5859-2	RB14-6	W2/TB1-1	1	RB14-6	W2/PS2-H	1
W3	11.5	5859-1	RB14-6	W3/TB1-3	1	RB14-6	W3/PS2-N	1
W8	10.5	5859-4	RB14-6	W8/TB1-6	1	RB14-6	W8/PS2-PE	1
W170	44.75	5855-1	RA18-6	W170/A2TB15-5	1	RA18-6	W170/A3-2	2
W171	42.5	5855-1	RA18-6	W171/A2TB15-6	1	RA18-6	W171/A7-2	2
W172	43	5855-1	RA18-6	W172/A2TB15-7	1	RA18-6	W172/A6-2	2
W173	49	5855-1	RA18-6	W173/A2TB15-8	1	RA18-6	W173/A5-2	2
W174	46	5855-1	RA18-6	W174/A2TB15-9	1	RA18-6	W174/A4-2	2
W175	47.5	5855-1	RA18-6	W175/A2TB15-10	1	RA18-6	W175/A8-2	2
W179	48.5	5855-1	RA18-6	W179/A2TB16-4	1	RA18-6	W179/A3-1	1
W180	50	5855-1	RA18-6	W180/A2TB16-5	1	RA18-6	W180/A7-1	1
W181	47	5855-1	RA18-6	W181/A2TB16-6	1	RA18-6	W181/A6-1	1
W182	56.5	5855-1	RA18-6	W182/A2TB16-7	1	RA18-6	W182/A5-1	1
W183	53.5	5855-1	RA18-6	W183/A2TB16-8	1	RA18-6	W183/A4-1	1
W184	57	5855-1	RA18-6	W184/A2TB16-9	1	RA18-6	W184/A8-1	1
W161	3.5	5855-1	RA18-6	W161/A2TB14-6	2	RA18-6	W161/A2TB16-4	1

TERMINAL AVIATION ADMINISTRATION
6500 S. MACARTHUR BLVD - BLDG 601
OKLAHOMA CITY, OK 73169

LRR ENCODER REPLACEMENT

POWER DISTRIBUTION UNIT
RING TERMINAL TO RING TERMINAL

D | LRR-000067-0016 | A

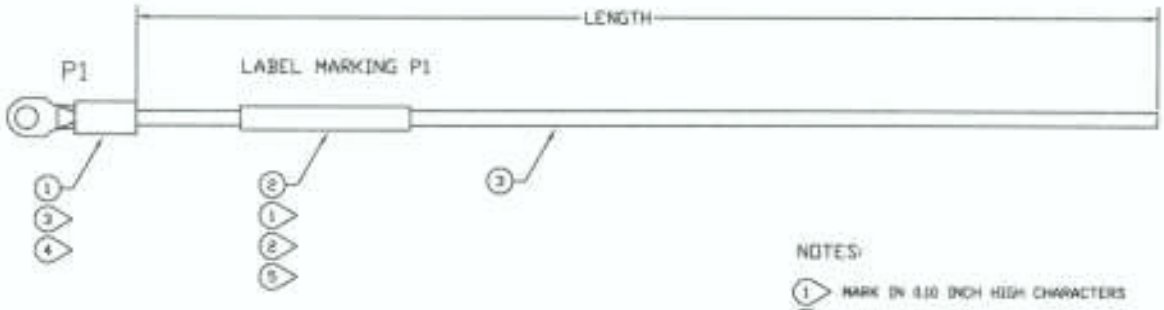

NOTES:

1. MARK IN 0.10 INCH HIGH CHARACTERS
2. SHRINK TUBING PER MANUFACTURER INSTRUCTIONS
3. CRIMP TERMINALS PER MANUFACTURER INSTRUCTIONS
4. ASSEMBLE PER MANUFACTURER INSTRUCTIONS
5. CABLE LABEL TO BE WITHIN 1 INCH OF APPROPRIATE CONNECTOR END

TABLE 1

PART NO.	LENGTH	WIRE	TERMINAL P1	LABEL MARKING P1
W15	55.5	5859-4	RB14-14	W15/GND-STUD

QTY.	PART NO.	DESCRIPTION	FIND NO.
SEE TABLE 1	5859-4	ALPHAWIRE - HOOK-UP WIRE, MIL-W-16878E, 14AWG, STRANDED, TFE JACKET, GREEN	3
1	RB14-14	THOMAS & BETTS - TERMINAL, RING, INSULATED, NYLON, 14AWG - 18AWG, BLUE, 1/4" STUD	1
1	PSPT-125-175YL	BRADY - PERMASLEEVE WIRE MARKER SLEEVE, HEATSHRINK	0

DIMENSIONS - INCHES

FEDERAL AVIATION ADMINISTRATION
4500 S. MACARTHUR BLVD - BLDG 207
OKLAHOMA CITY, OK 73169

LRR ENCODER REPLACEMENT
POWER DISTRIBUTION UNIT
GND TERMINAL TO FEMALE DISCONNECT

CTORD 04/30/2009

D | LRR-000067-0017 | A

SHEET 1 OF 1

POWER DISTRIBUTION BOARD (A2)
PS_DIST_BRD

FABRICATION DRAWING PAGE 2
BILL OF MATERIALS PAGE 3

DIMENSIONS - INCHES	FEDERAL AVIATION ADMINISTRATION [illegible] DELAWARE CITY, DE 19557
	PS_DIST_BRD REV B PARTS LIST
[illegible]	D LRR-000067-001B E

DRILL SYMBOL	DRILL SIZE	COUNT	PLATED	Min/Max
[illegible]	[illegible]	[illegible]	[illegible]	---
[illegible]	[illegible]	[illegible]	[illegible]	---
[illegible]	[illegible]	[illegible]	[illegible]	---
[illegible]	[illegible]	[illegible]	[illegible]	---
[illegible]	[illegible]	[illegible]	[illegible]	---

MFG NOTES:
Layers: 7
Material: 0.093" FR4
Dimensions: 14.5" x 9.5"
Plating: Lead Free Solder
Cu Weight: 2 oz min
Inner Layer Cu Weight: 2 oz min
Plated Slots: No
Gold Fingers: None
Soldermask: Both Sides with LPI
Soldermask Color: Green
Counter Sinks: No
Counter Bores: No
CNC Route points: 4
Tab Route: No
Scoring: No
Plated Edges: No
Controlled Dielectric: No
Controlled Impedance: No
Inspected to IPC-A-600G, Class 2
All holes plated through

COMPONENT PLACEMENT NOTES:
General: All thru-hole parts should be inserted from the top side of the board. The top side has the terminal block silkscreen's shown.

Diodes: The line on the diode should be oriented to match the same side as the silkscreen line on the board.

Heatsinks: Add heatsinks to the rectifiers after they have been soldered onto the board.

Terminal Blocks: Use 3/4" #4-40 screws, nuts, and washers to secure the terminal blocks to the board before soldering.

FEDERAL AVIATION ADMINISTRATION

Power Supply Distribution Board Fabrication Drawing

1199-000067-0018

SHEET 2 OF 3

Parts:

DESCRIPTION	REFERENCE DESIGNATOR	PART #	MANUFACTURER	TOTAL QUANTITY
Terminal Block, 10 Pos., 0.375" Spacing	TB1	38720-6210	Molex	16
Terminal Block, 10 Pos., 0.375" Spacing	TB2	38720-6210	Molex	
Terminal Block, 10 Pos., 0.375" Spacing	TB3	38720-6210	Molex	
Terminal Block, 10 Pos., 0.375" Spacing	TB4	38720-6210	Molex	
Terminal Block, 10 Pos., 0.375" Spacing	TB5	38720-6210	Molex	
Terminal Block, 10 Pos., 0.375" Spacing	TB6	38720-6210	Molex	
Terminal Block, 10 Pos., 0.375" Spacing	TB7	38720-6210	Molex	
Terminal Block, 10 Pos., 0.375" Spacing	TB8	38720-6210	Molex	
Terminal Block, 10 Pos., 0.375" Spacing	TB9	38720-6210	Molex	
Terminal Block, 10 Pos., 0.375" Spacing	TB10	38720-6210	Molex	
Terminal Block, 10 Pos., 0.375" Spacing	TB11	38720-6210	Molex	
Terminal Block, 10 Pos., 0.375" Spacing	TB12	38720-6210	Molex	
Terminal Block, 10 Pos., 0.375" Spacing	TB13	38720-6210	Molex	
Terminal Block, 10 Pos., 0.375" Spacing	TB14	38720-6210	Molex	
Terminal Block, 10 Pos., 0.375" Spacing	TB15	38720-6210	Molex	
Terminal Block, 10 Pos., 0.375" Spacing	TB16	38720-6210	Molex	
TVS Diode, Vbr 27V	D1	1N6281AG	ON Semiconductor	3
TVS Diode, Vbr 27V	D3	1N6281AG	ON Semiconductor	
TVS Diode, Vbr 27V	D4	1N6281AG	ON Semiconductor	
TVS Diode, Vbr 10V	D2	1N6271AG	ON Semiconductor	1
TVS Diode, Vbr 51V	D5	1N6288AG	ON Semiconductor	1
TVS Diode, Vbr 33V	D6	1N6283AG	ON Semiconductor	2
TVS Diode, Vbr 33V	D7	1N6283AG	ON Semiconductor	
Bridge Rectifier, 35A	U1	GBPC3506W	Fairchild Semiconductor	7
Bridge Rectifier, 35A	U2	GBPC3506W	Fairchild Semiconductor	
Bridge Rectifier, 35A	U3	GBPC3506W	Fairchild Semiconductor	
Bridge Rectifier, 35A	U4	GBPC3506W	Fairchild Semiconductor	
Bridge Rectifier, 35A	U5	GBPC3506W	Fairchild Semiconductor	
Bridge Rectifier, 35A	U6	GBPC3506W	Fairchild Semiconductor	
Bridge Rectifier, 35A	U7	GBPC3506W	Fairchild Semiconductor	
BGA Heatsink, 28mm, Omindirectional		658-60ABT3	Wakefield	7
BGA Heatsink, 28mm, Omindirectional		658-60ABT3	Wakefield	
BGA Heatsink, 28mm, Omindirectional		658-60ABT3	Wakefield	
BGA Heatsink, 28mm, Omindirectional		658-60ABT3	Wakefield	
BGA Heatsink, 28mm, Omindirectional		658-60ABT3	Wakefield	
BGA Heatsink, 28mm, Omindirectional		658-60ABT3	Wakefield	
BGA Heatsink, 28mm, Omindirectional		658-60ABT3	Wakefield	
#4-40 Screws, 3/4", Pan-Head Phillips, Stainless Steel				32
#4-40 Nuts, Stainless Steel				32
#4 Flat Washers				32

PS_DIST_BRD REV B

PARTS LIST

D

LRR-000067-0018

E

POWER SUPPLY MONITOR - A1

TABLE OF CONTENTS

PAGE TITLE:	PAGE #:
Fabrication Drawing	2
Bill Of Materials	3

PSM

AE-B-2044

E

SHEET 1 OF 3

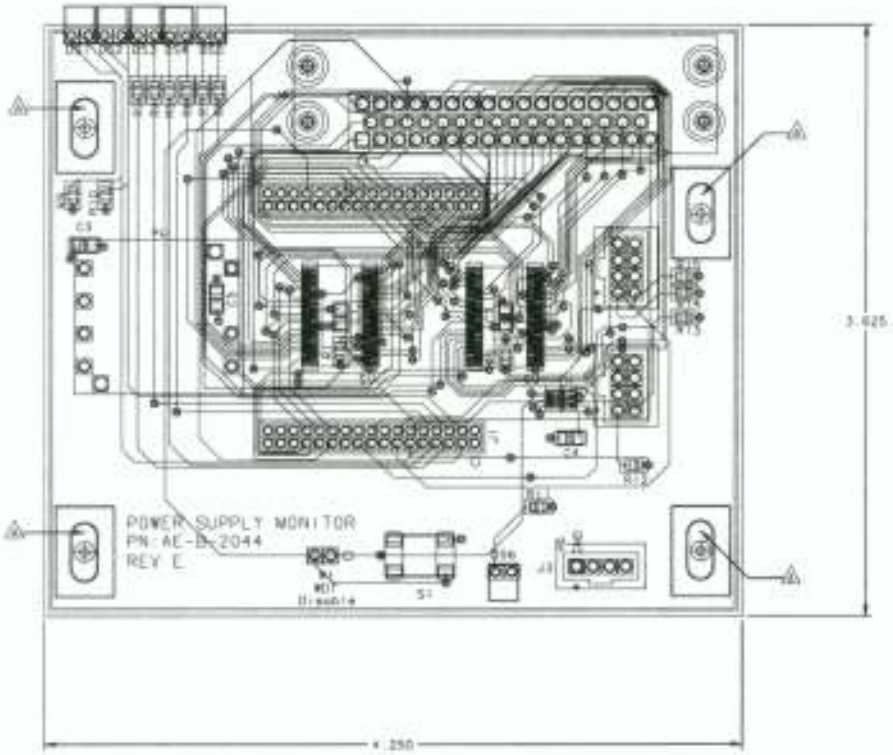

MASTER DRILL SCHEDULE

DRILL SYMBOL	DRILL SIZE	COUNT	PLATED	Min/Max
○	.015	103	YES	----
⊠	.036	80	YES	----
◎	.041	2	YES	----
⊡	.043	27	YES	----
⊠	.052	50	YES	----
⊡	.0625	2	YES	----
⊕	.12	4	YES	----
□	.125	4	YES	----

Layers: 8
Material: 0.0625
Dimensions: 4.250 x 3.625"
Plating: Lead Free Solder
Cu Weight: 1 .oz min
Inner Layer Cu Weight: 1 .oz min
All holes plated through
Gold Fingers: None
Soldermask: Both Sides with LPI
Soldermask Color: Green
CNC Route points: 4
Tab Route: No
Scoring: No
Plated Edges: No
Controlled Dielectric: No
Controlled Impedance: No
Inspected to IPC-A-6000, Class 2

PLACEMENT NOTES:
-S1 HAS A CIRCLE TO INDICATE THE SIDE TO HAVE THE METAL SIDE OF THE SWITCH FACE
-USE #4-40 HARDWARE (SCREW,LOCK,FLAT,NUT) TO FASTEN THE 50 PIN CONNECTOR TO THE PSM
-ALL LED'S SHOULD FACE AWAY FROM THE CENTER OF THE BOARD
-CIRCLE/DOTS INDICATE PIN 1 FOR THE CONNECTORS

A - 0.15 inch wide, 0.35 inch long, vertical slot centered on drill hole

INSTALLATION INSTRUCTIONS:
-MOUNT PSM BOARD ONTO THE 4 STANDOFFS IN THE BOTTOM OF THE PDU. THE LED'S SHOULD FACE OUT THE REAR OF THE PDU CHASSIS.
-USE THE FOLLOWING HARDWARE 4X(#4-40 PAN-HEAD PHILLIPS SCREW 3/8" LENGTH, #4 FLAT WASHER, #4 SPLIT WASHER)
-INSTALL PROVIDED RABBIT CORE MODULE INTO TOP OF COMPLETED PSM CARD.
-INSTALL PDU INTERNAL CABLES TO PSM ACCORDING TO LABELING.

APPROVALS	DATE	PSM - Fabrication Drawing
CFORD	4/21/09	
		AE-B-2044
		SHEET 2 OF 3

PSM Parts List

Ref Des	Qty	Part Number	Description	Manufacturer
U1	1	MAX6370KA	Watchdog Timer	Maxim
U2, U3	2	DS89C386TMEA/NOPB	12 Channel Differential Rx	National Semiconductor
U4	1	CC6-0503SF-E	3.3V DC-DC Converter	Lambda
J1, J2	2	SQT-117-01-F-D	2x17 2mm Socket, PCB Mount	Samtec
J3	1	90136-1104	.100" Pitch, 4 Position PCB Header (for Power)	Molex
J4	1	747193-1	DB50, 90 degree, PCB Mount	AMP
J5, J6	2	90130-1108	.100" Pitch, 8 Position PCB Header (for I2C)	Molex
DS1	1	WP934CB/ID	3mm LED, PCB mount, Red	Kingbright
DS2	1	WP934CB/YD	3mm LED, PCB mount, Yellow	Kingbright
DS3 - DS5	3	WP937CB/EGW	3mm LED, PCB mount, Red/Green	Kingbright
DS6	1	WP934CB/GD	3mm LED, PCB mount, Green	Kingbright
R1, R2	2	RR1220P-1131-D-M	Metal Film Resistor, 1130.0 ohm, 100V, .5%	Susumu
R3 - R8	6	RR1220Q-54R9-D-M	Metal Film Resistor, 54.9 ohm, 100V, .5%	Susumu
R9 - R11	3	RR1220P-1070-D-M	Metal Film Resistor, 107.0 ohm, 100V, .5%	Susumu
R12 - R15	4	RR1220P-1401-D-M	Metal Film Resistor, 1401.0 ohm, 100V, .5%	Susumu
C1 - C4	4	C1206C104K5RAC-TU	Capacitor, .1uf, 50V, 10%	Kemet
C5	1	C1206C105K3RAC-TU	Capacitor, 1uf, 25V, 10%	Kemet
W1	1	TSW-102-08-F-S	.100" Pitch, 2 Position PCB Header (WDT Jumper)	Samtec
	1	SNT-100-BK-G	.100" Pitch, 2 Position Jumper	Samtec
S1	1	GP11MSABE	SPST Pushbutton Switch, .4VA at 20VAC/DC	C&K Components
	4		#4-40 Screw, S/S, Panhead Phillips, 3/8"	
	4		#4 Flat Washer, S/S	
	4		#4 Split Washer, S/S	

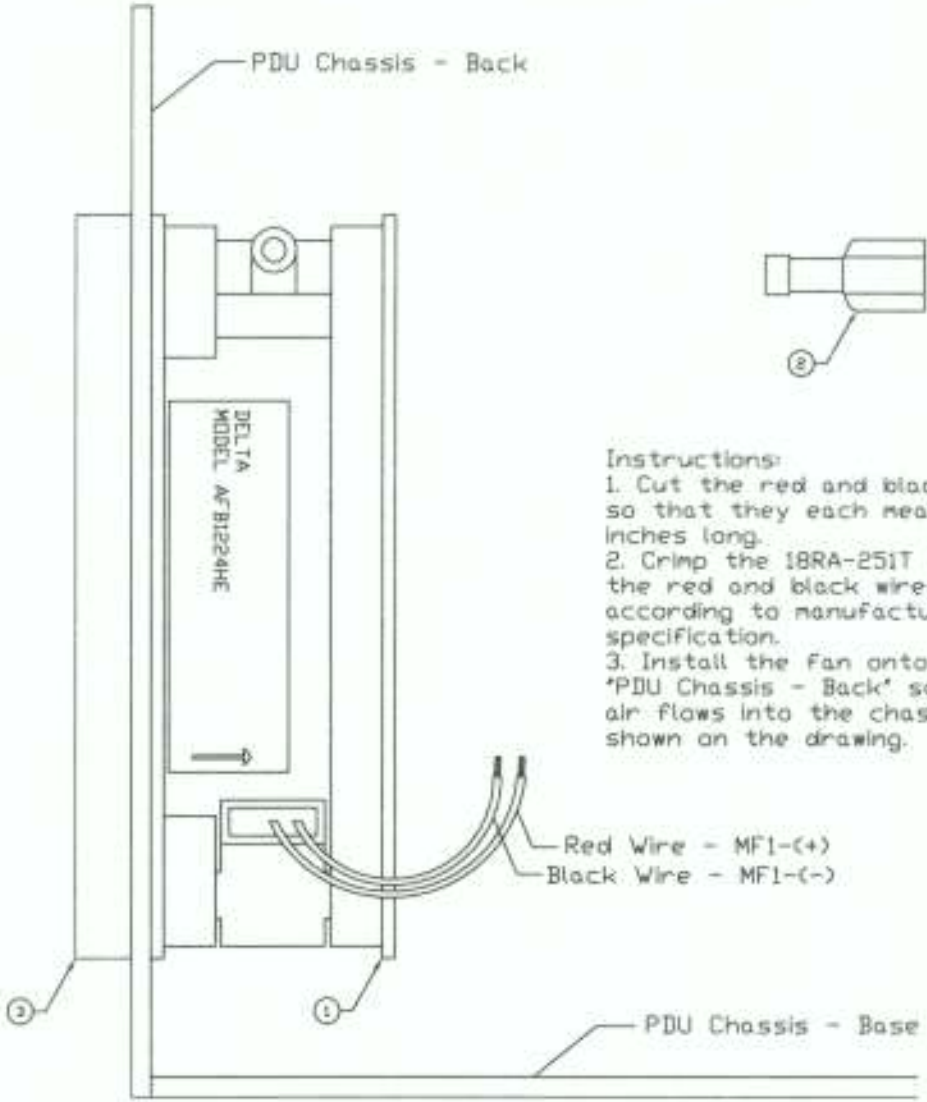

Instructions:
1. Cut the red and black wires so that they each measure 4 inches long.
2. Crimp the 18RA-251T onto the red and black wires according to manufacturers specification.
3. Install the fan onto the "PDU Chassis - Back" so that air flows into the chassis, as shown on the drawing.

QTY.	PART NO.	DESCRIPTION	FIND NO.
1	8205-5005-0413 -MOD	TECH-ETCH - EMI MUFFIN FAN FILTER	3
2	18RA-251T	THOMAS & BETTS - QUICK CONNECT, MALE, INSULATED, NYLON, 16AWG - 22AWG, RED	2
1	AFB1224HE	DELTA - 24VDC FAN, 120X120MM	1

DIMENSIONS - INCHES

FEDERAL AVIATION ADMINISTRATION
6500 S. MACARTHUR BLVD - BLDG 207
OKLAHOMA CITY, OK 73169

LRR ENCODER REPLACEMENT
POWER DISTRIBUTION UNIT
MUFFIN FAN

D | LRR-000067-0019 | A

SHEET 1 OF 1

POWER SUPPLY INPUTS

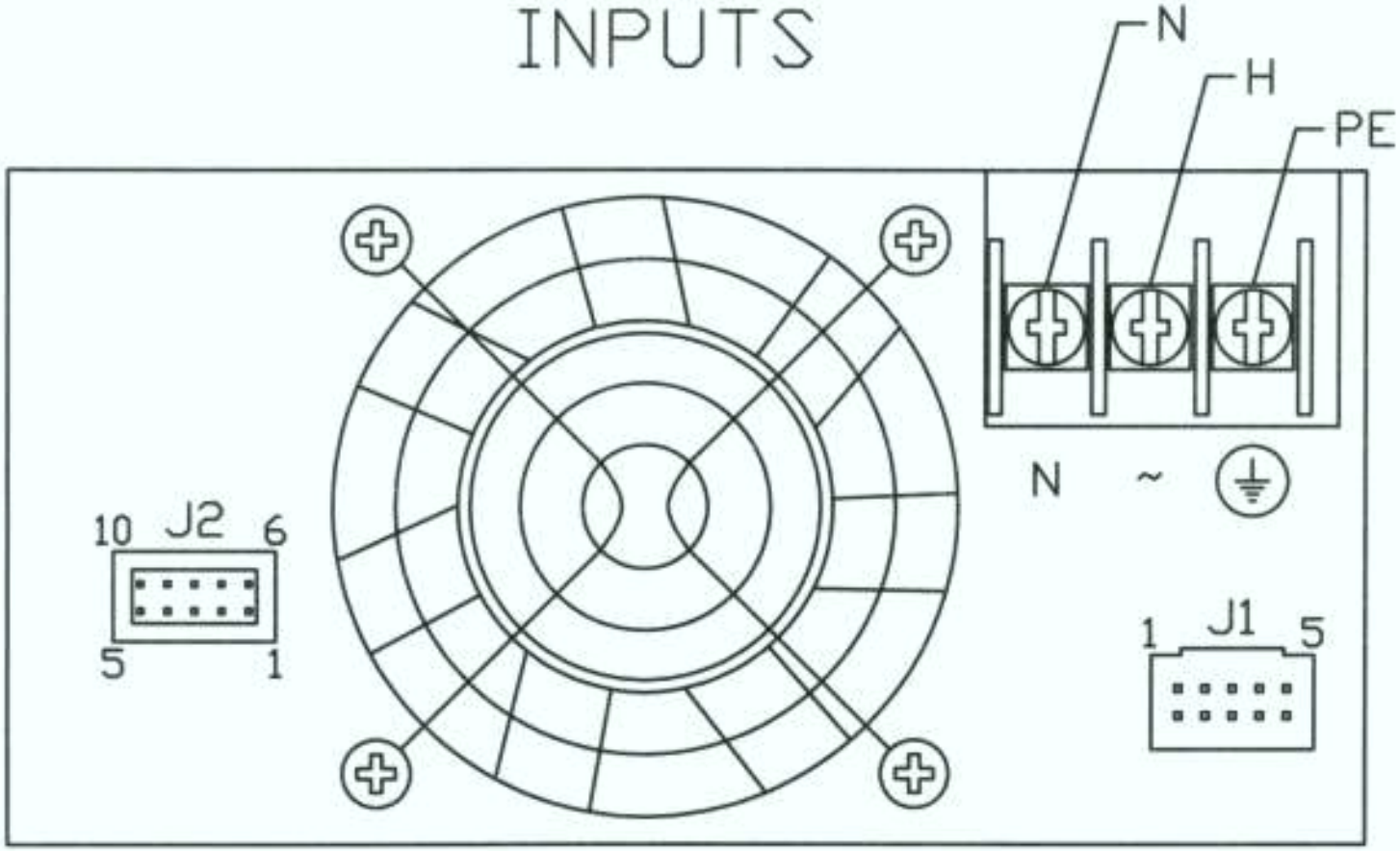

FEDERAL AVIATION ADMINISTRATION
ADDS & MACARTHUR BLVD - BLDG 207
OKLAHOMA CITY, OK 73169

LRR ENCODER REPLACEMENT
POWER DISTRIBUTION UNIT
POWER SUPPLY - INPUTS

D		LRR-000067-0020	A

POWER SUPPLY OUTPUTS
(PS1 AND PS2)

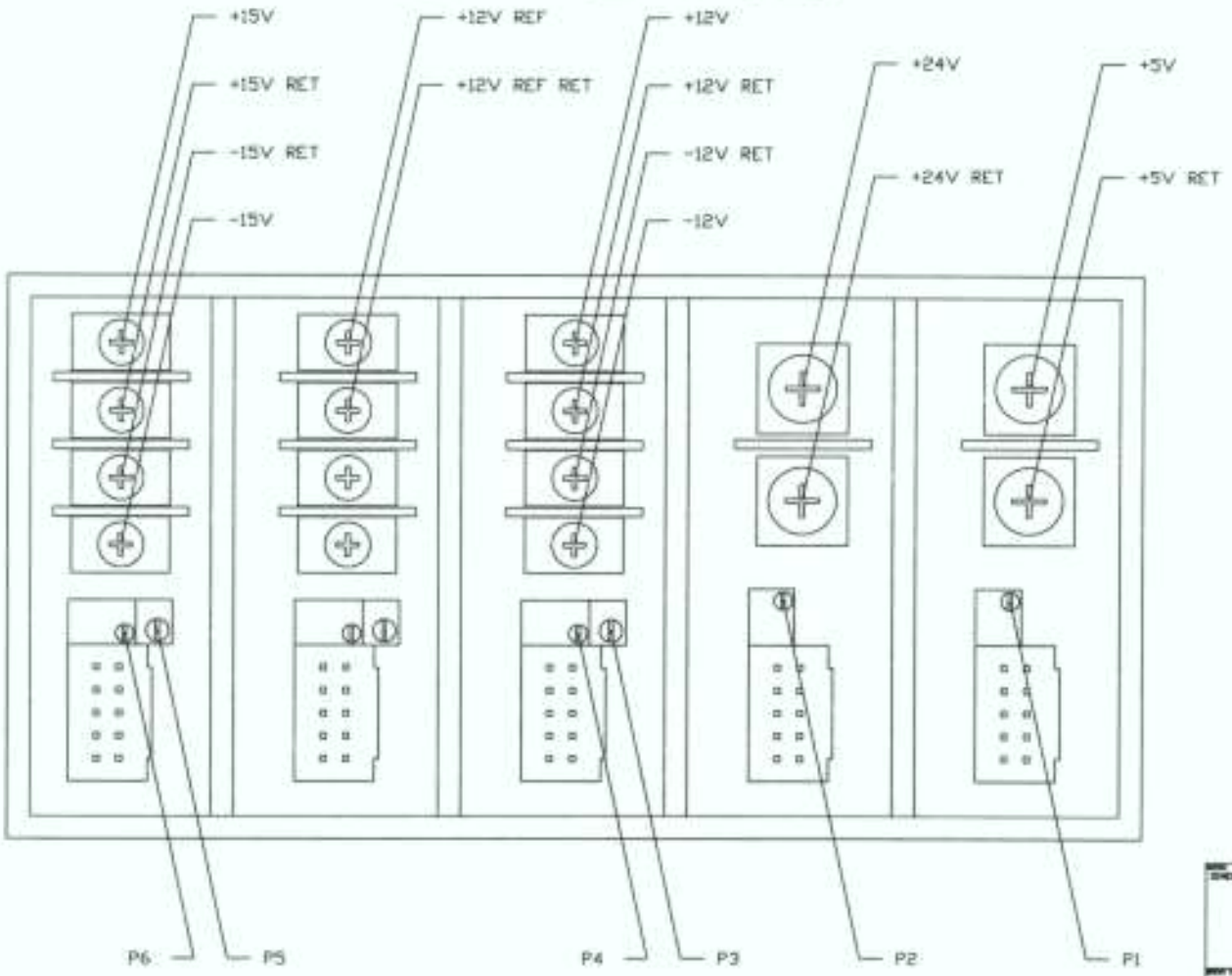

LRR ENCODER REPLACEMENT

POWER DISTRIBUTION UNIT

POWER SUPPLY - OUTPUTS

D | LRR-000067-0021 | A

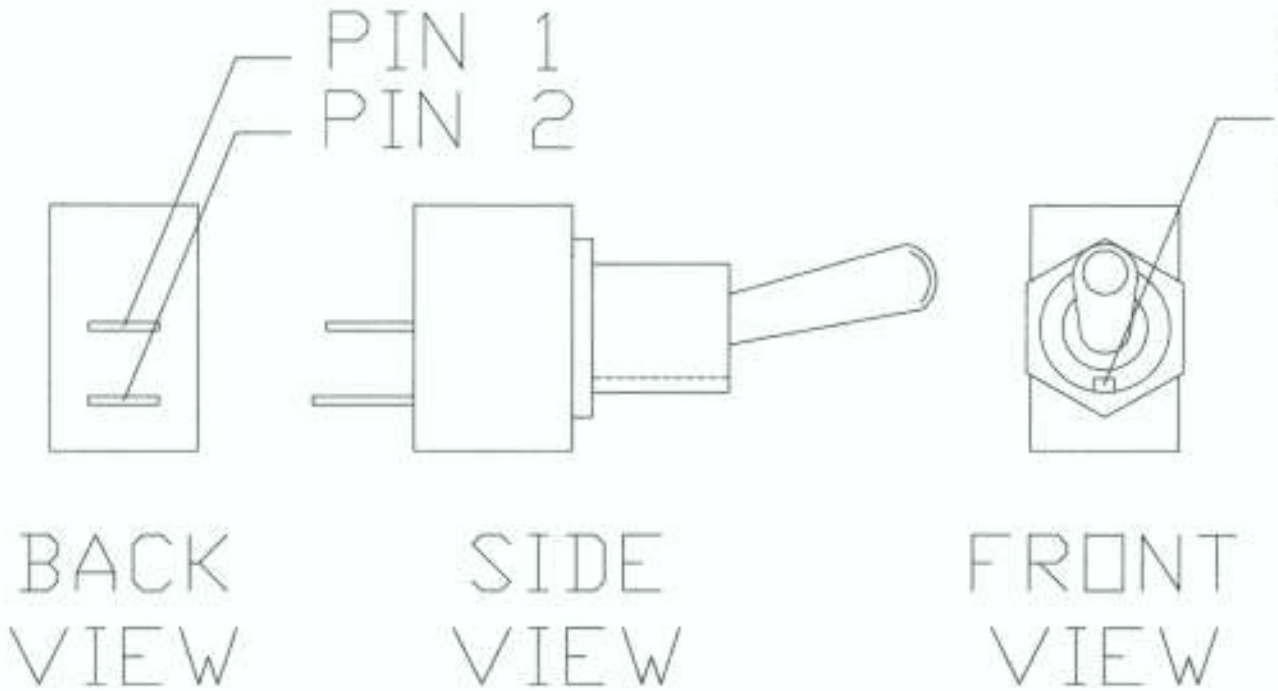

Mounting Instructions:
Install switch according to manufacturer's instructions with the key facing the bottom of the PDU Chassis.

DIMENSIONS - INCHES

FEDERAL AVIATION ADMINISTRATION

LRR ENCODER REPLACEMENT

POWER DISTRIBUTION UNIT

TOGGLE SWITCH

D | LRR-000067-0022 | A

SHEET 1 OF 1

LCD METERS BACK LAYOUT
(A3,A4,A5,A6,A7,A8)

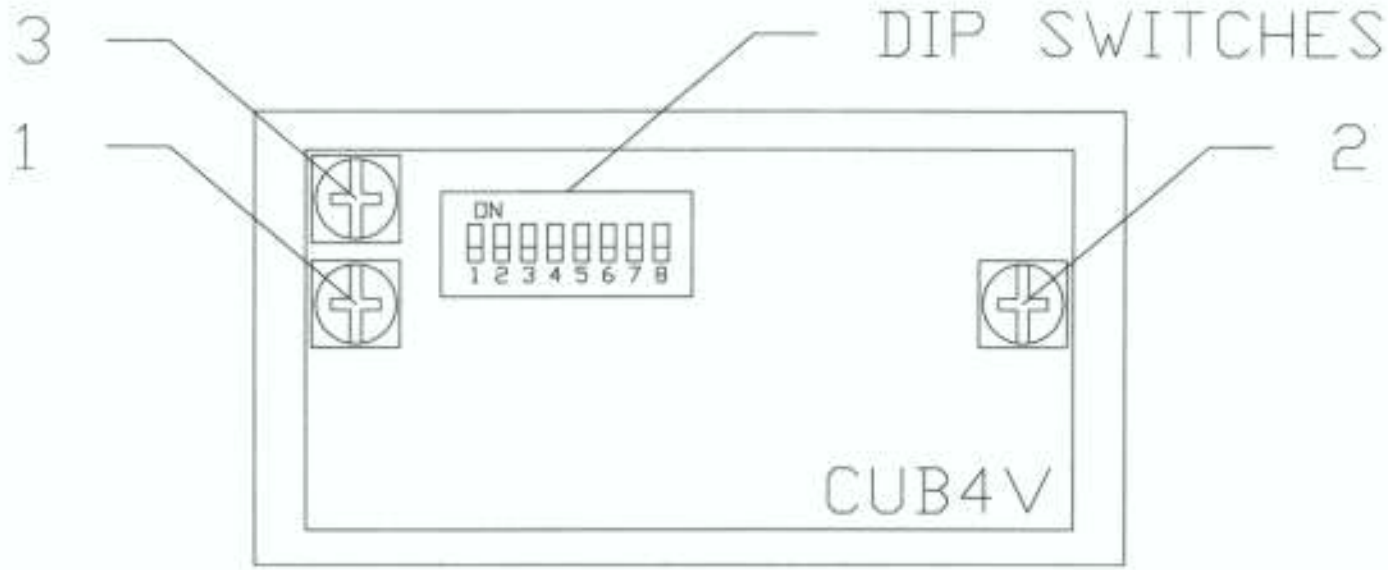

LRR ENCODER REPLACEMENT

LRR-000067-0023 A

PDU Assembly Instructions

1.1 Assembly Summary- These procedures describe how to assemble the PDU. This includes general instructions for assembling the PDU chassis, installing the wire harnesses, connectors, and parts.

2.1 Materials and Equipment Required- #2 Phillips screwdriver, #1 Phillips screwdriver, Flat-head screwdriver, and a Crescent wrench.

3.1 Assembling the PDU- Assemble the PDU according to LRR-000067-0003.

4.1 Installing Parts- Install the parts using the hardware listed and according to reference designators, visual interpretation of LRR-000067-0003, and per manufacturer's instructions.

4.1.1 Power Supplies- Install the power supplies with the outputs facing the PDU Chassis - Front. Use LRR-000067-0020, LRR-000067-21, and LRR-000067-0003 for reference.

4.1.2 Muffin Fan- Install the muffin fan so that air flows into the chassis. Use LRR-000067-0019 and LRR-000067-0003 for reference.

4.1.3 Toggle Switches-Install the toggle switches using LRR-000067-0022 and LRR-000067-0003 for reference.

4.1.4 LCD Meters- Install the LCD meters so that the text reads in the same orientation as the text on the PDU Chassis - Front and using LRR-000067-0003 for reference.

4.15 PS_DIST_BRD- Install the PS_DIST_BRD (A2) using LRR-000067-0003 for reference. The silkscreen on the PCB should be visible when mounted. TB1 should be closest to the rotary switch on the front of the PDU.

4.16 Remaining Parts- Install the remaining parts using LRR-000067-0003 for reference.

5.1 Installing the Cables, Wires, and Wire Harnesses- Install these items according to LRR-000067-0003.

FEDERAL AVIATION ADMINISTRATION

POWER DISTRIBUTION UNIT

ASSEMBLY INSTRUCTIONS

D LRR-000067-0024 A

Configuration, Alignment, and Test Procedures

1.1 Configuration and Test Summary- These procedures describe how to setup the initial configuration for the PDU. This includes configuring the LCD display dipswitch settings and adjusting the voltage outputs from the power supply modules. The procedure for testing the output connectors is also described.

2.1 Materials and Equipment Required- The vendor performing the testing should provide a digital multi-meter and a small flathead screwdriver.

3.1 Setup- Before performing these procedures, verify that all wires in the PDU have been routed and terminated correctly.

3.2 Detach the PDU Chassis - Front Panel- Detach the PDU Chassis - Front Panel from the PDU so that you can access the backs of the LCD's.

3.3 Dipswitch Settings- Use LRR-000067-0023 for reference as you set the dipswitches on the LCD displays (A3, A4, A5, A6, A7, A8).

3.4 For A3, A4, A5, A6, and A7- On the back of the LCD, set switches 3 and 7 to the up (ON) position. The rest of the switches should be set to the down position.

3.5 For A8- On the back of the LCD, set switches 4 and 6 to the up (ON) position. The rest of the switches should be set to the down position.

4.1 Setting the Bus Voltages- Use LRR-000067-0021 for reference. Unscrew the PDU Chassis - Front Panel from the PDU. Lay the Front Panel in front of the PDU so that the LCD meters can be seen and the power supply outputs can be accessed. Set the front rotary switch (SW1) to the furthest counter-clockwise ("Bus") position.

4.2.1 For PS1- Plug an AC power cord into J5. Turn the toggle switch PS1 (SW2) to the up ("ON") position.

4.2.2 Adjust PS1-P1- Adjust PS1-P1 with a small flathead screwdriver until the +5V LCD display reads "5.20".

4.2.3 Adjust PS1-P2- Adjust PS1-P2 with a small flathead screwdriver until the +24V LCD display reads "24.3".

4.2.4 Adjust PS1-P3- Adjust PS1-P3 with a small flathead screwdriver until the -12V LCD display reads "-12.45".

4.2.5 Adjust PS1-P4- Adjust PS1-P4 with a small flathead screwdriver until the +12V LCD display reads "+12.45".

4.2.6 Adjust PS1-P5- Adjust PS1-P5 with a small flathead screwdriver until the -15V LCD display reads "-15.55".

4.2.7 Adjust PS1-P6- Adjust PS1-P6 with a small flathead screwdriver until the +15V LCD display reads "+15.55".

4.2.8 Turn the PDU Off- Turn the toggle switch PS1 (SW2) to the down ("OFF") position. Unplug the AC power cord from J5.

4.3.1 For PS2- Plug an AC power cord into J6. Turn the toggle switch PS2 (SW3) to the up ("ON") position.

4.3.2 Adjust PS2-P1- Adjust PS2-P1 with a small flathead screwdriver until the +5V LCD display reads "5.20".

4.3.3 Adjust PS2-P2- Adjust PS2-P2 with a small flathead screwdriver until the +24V LCD display reads "24.3".

4.3.4 Adjust PS2-P3- Adjust PS2-P3 with a small flathead screwdriver until the -12V LCD display reads "-12.45".

4.3.5 Adjust PS2-P4- Adjust PS2-P4 with a small flathead screwdriver until the +12V LCD display reads "+12.45".

4.3.6 Adjust PS2-P5- Adjust PS2-P5 with a small flathead screwdriver until the -15V LCD display reads "-15.55".

4.3.7 Adjust PS2-P6- Adjust PS2-P6 with a small flathead screwdriver until the +15V LCD display reads "+15.55".

4.3.8 Turn the PDU Off- Turn the toggle switch PS2 (SW3) to the down ("OFF") position. Unplug the AC power cord from J6.

5.1 Test the Output Connectors Continuity- Using a digital multi-meter, test the continuity between the following points as described.

5.1.1 All of these pins/sockets should be shorted together: J2-2, J2-4, J2-6, J2-8, J2-10, J2-12, J2-14, J3-D, J3-K, J7-A, J7-B, J7-C, J7-D, J7-E, J7-L, J8-A, J8-B, J8-C, J8-D, J8-E, J8-L, J9-B, J9-C, J9-F, J9-J, J9-L, J9-P, J9-R, J9-T.

5.1.2 All of these pins/sockets should be shorted together: J2-1, J7-F, J8-F, J9-D, J9-G, J9-M, J9-S, J9-U.

5.1.3 All of these pins/sockets should be shorted together: J2-3, J7-K, J8-K.

5.1.4 All of these pins/sockets should be shorted together: J2-5, J7-H, J8-H.

5.1.5 All of these pins/sockets should be shorted together: J2-7, J3-A, J3-H, J9-A, J9-H, J9-N.

5.1.6 All of these pins/sockets should be shorted together: J2-9, J3-B, J3-J.

5.2 Test the Output Connectors Voltages- Plug power cables into J5 and J6 and turn on SW2 and SW3. Using a digital multi-meter, with J2-2 as the reference point for the negative lead, confirm the following voltages.

5.2.1 J2-1 should have +5.20V on it.

5.2.2 J2-3 should have +15.55V on it.

5.2.3 J2-5 should have -15.55V on it.

5.2.4 J2-7 should have +12.45V on it.

5.2.5 J2-9 should have -12.45V on it.

5.2.6 J2-11 should have +24.3V on it.

5.2.7 J2-13 should have between +11 and +13 volts on it.

6.1 If any of these tests cannot be correctly verified, check the wiring harness and consult the power supply manufacturer if needed.

DIMENSIONS - INCHES

FEDERAL AVIATION ADMINISTRATION
6500 S. MACARTHUR BLVD - BLDG 207
OKLAHOMA CITY, OK 73169

POWER DISTRIBUTION UNIT
TURN ON AND TEST PROCEDURES

D | LRR-000067-0025 | A

SHEET 2 OF 3

-Record the PDU Serial #.
PDU Serial #: _____

-Perform these procedures only after all of the wires, cables, and parts have been installed into the PDU, and the alignment and setup procedures have been performed. Plug power cords into J5 and J6 on the back of the PDU. Turn SW2 and SW3 to the 'On' pos

-Put SW1 in the "PS1" position. Record the following values off of the LCD Meters (A3-A8):					
+5V Meter LCD	+12V Meter LCD	-12V Meter LCD	+15V Meter LCD	-15V Meter LCD	+24V Meter LCD

-Using a DMM, measure and record the DC voltage on the following terminal block pins, using A2TB2-10 as the negative (reference) lead:					
A2TB5-1	A2TB3-1	A2TB7-1	A2TB9-1	A2TB11-1	A2TB13-1

-If the measured DC voltages are not within 0.01V of the values read on the LCD meters, follow the manufacturer's instructions for calibrating the LCD meters to accurately reflect the voltage measured. Compare A2TB5-1 to the +5V Meter, A2TB3-1 to the +12V

-Put SW1 in the "PS2" position. Record the following values off of the LCD Meters (A3-A8):					
+5V Meter LCD	+12V Meter LCD	-12V Meter LCD	+15V Meter LCD	-15V Meter LCD	+24V Meter LCD

-Using a DMM, measure and record the DC voltage on the following terminal block pins, using A2TB2-10 as the negative (reference) lead:					
A2TB5-3	A2TB3-3	A2TB7-3	A2TB9-3	A2TB11-3	A2TB13-3

-Put SW1 in the "BUS" position. Record the following values off of the LCD Meters (A3-A8):					
+5V Meter LCD	+12V Meter LCD	-12V Meter LCD	+15V Meter LCD	-15V Meter LCD	+24V Meter LCD

-Using a DMM, measure and record the DC voltage on the following terminal block pins, using A2TB2-10 as the negative (reference) lead:					
A2TB5-5	A2TB3-5	A2TB7-5	A2TB9-5	A2TB11-5	A2TB13-5

FEDERAL AVIATION ADMINISTRATION

POWER DISTRIBUTION UNIT
TEST TABLES

D | LRR-000067-0026 | A

1. With the RPP computer running, power on the PDU unit by switching both PS 1 and PS 2 power switches to the "**On**" position.
2. Confirm that both the far left LED's are green, refer to figure 1.

Note:
PDU unit will take approximately 30 seconds to establish link with RPP computer. After that time the LED indicatoes will turn from red to green.

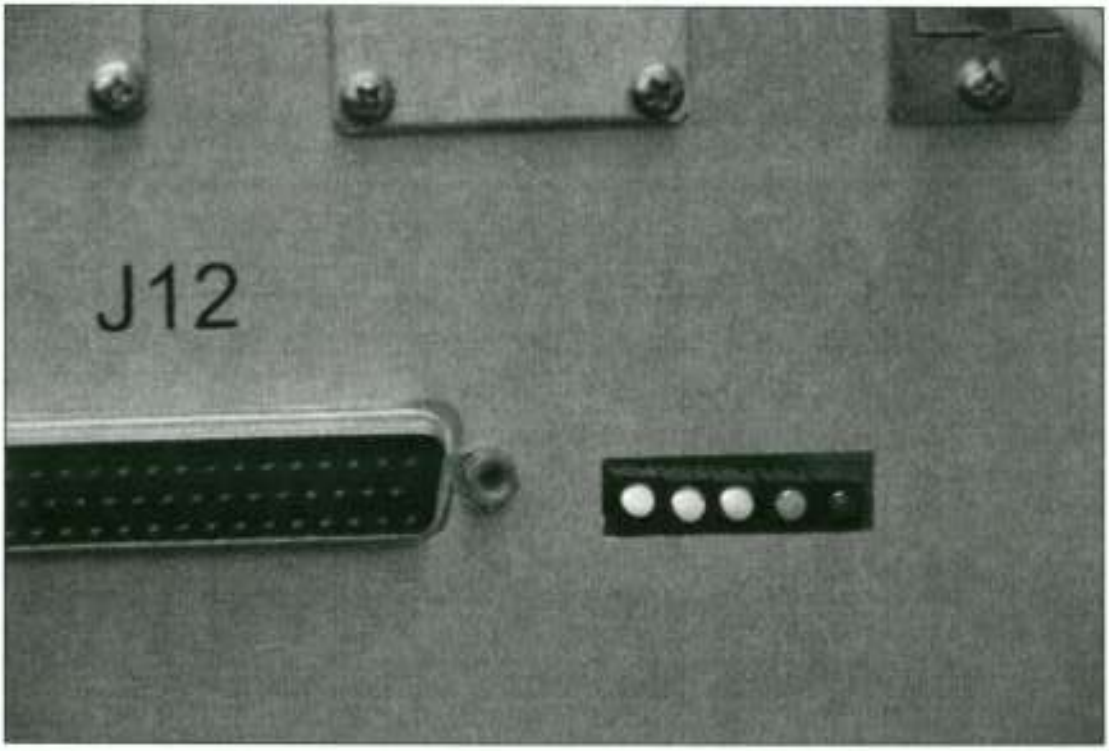

Figure 1 - PS 1 and PS 2 LED OK

3. At the RPP computer, navigate to the PDU B status screen, using Firefox, refer to figure 2.

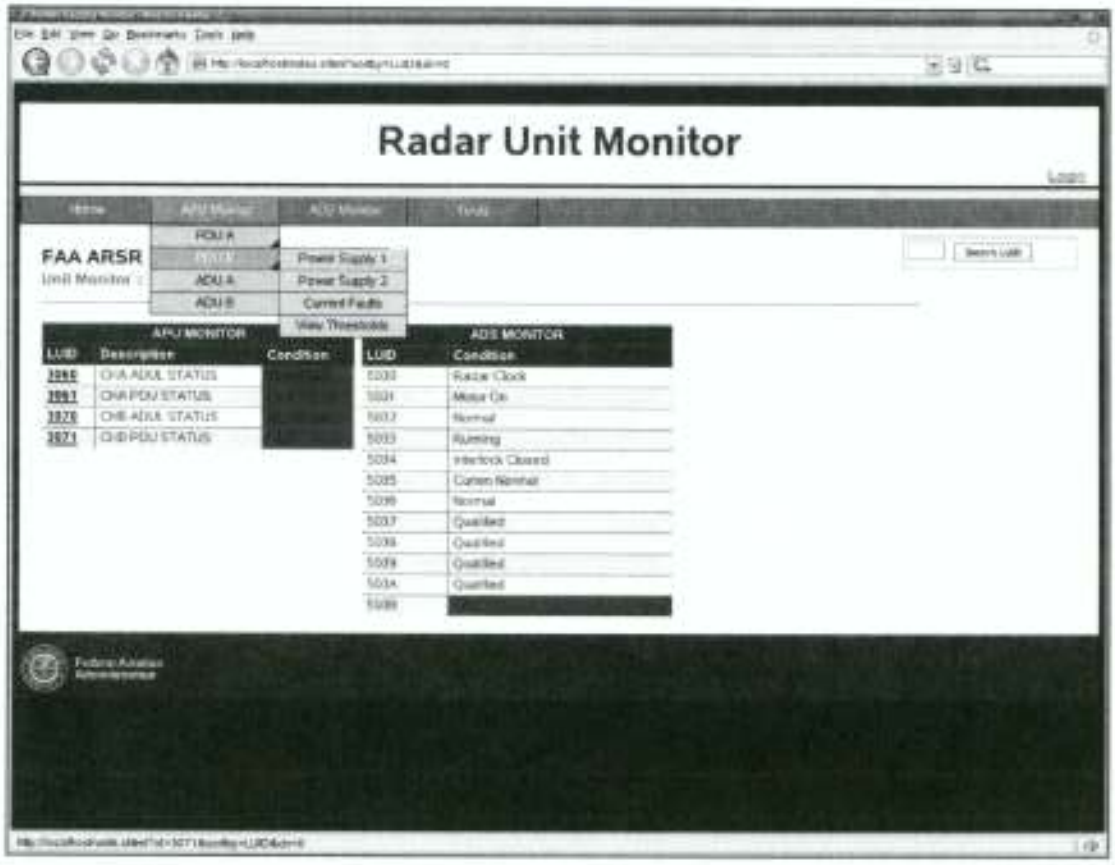

Figure 2 – Radar Unit Monitor, Navigation to PDU B Status

4. Confirm that both LUID 4406 and 4407 conditions read "**Normal**".

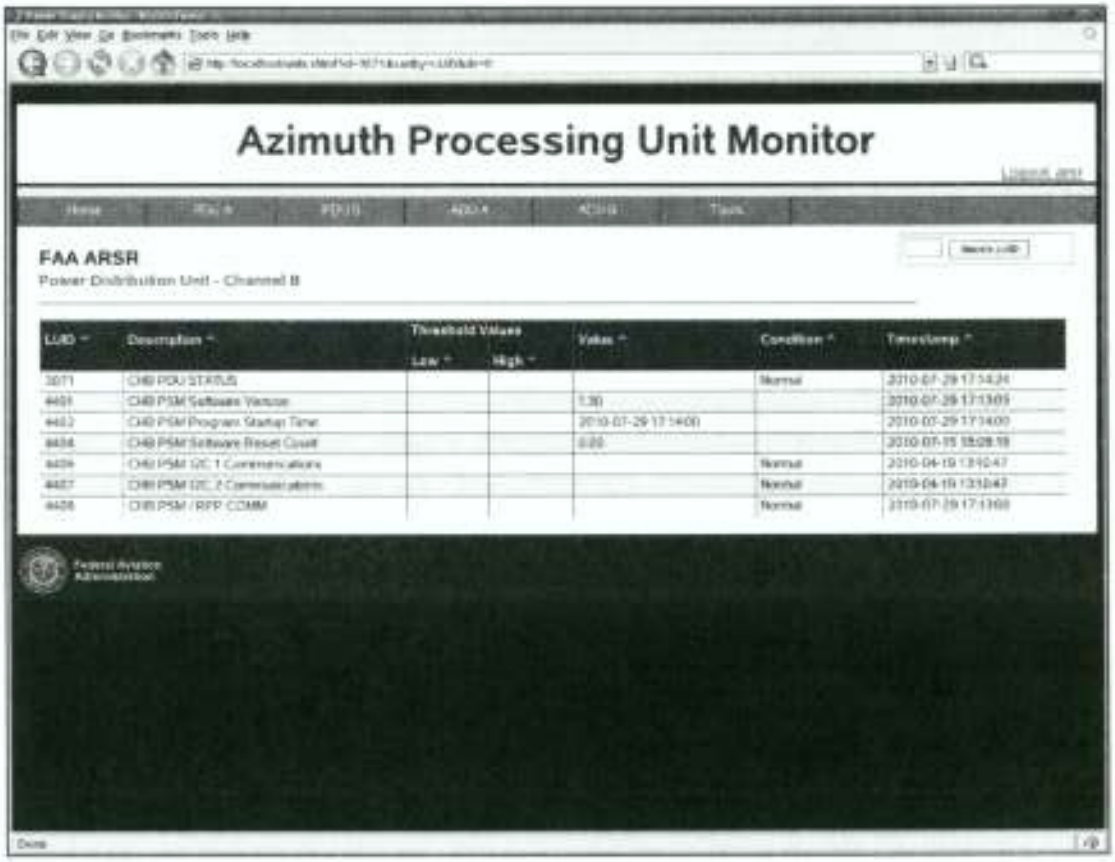

Figure 3 – PDU B Status with Normal Conditions

5. Switch PS 1 to the "**OFF**" position. Confirm that PS 1's LED changed to red. Refer to figure 4.

Figure 4 – PS 1 LED Indicator Change to Red.

6. Refresh the PDU B status screen and confirm that LUID 4406 condition reads "**Fault**", refer to figure 5.

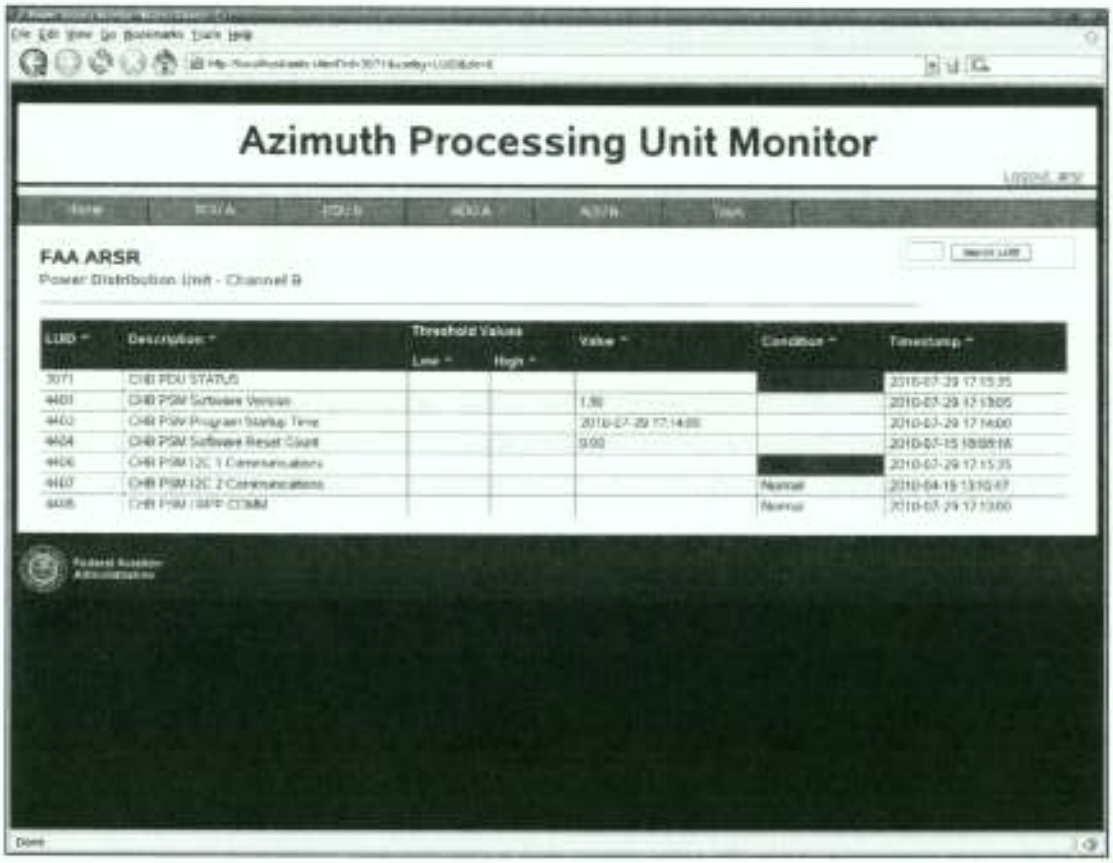

Figure 5 – PDU B Status with 4406 Condition "Fault"

7. Switch PS 1 into the "**ON**" position and switch PS 2 to the "**OFF**" position, confirm PS 2's LED indicator changes to red and PS 1's LED changes to green, refer to figure 6.

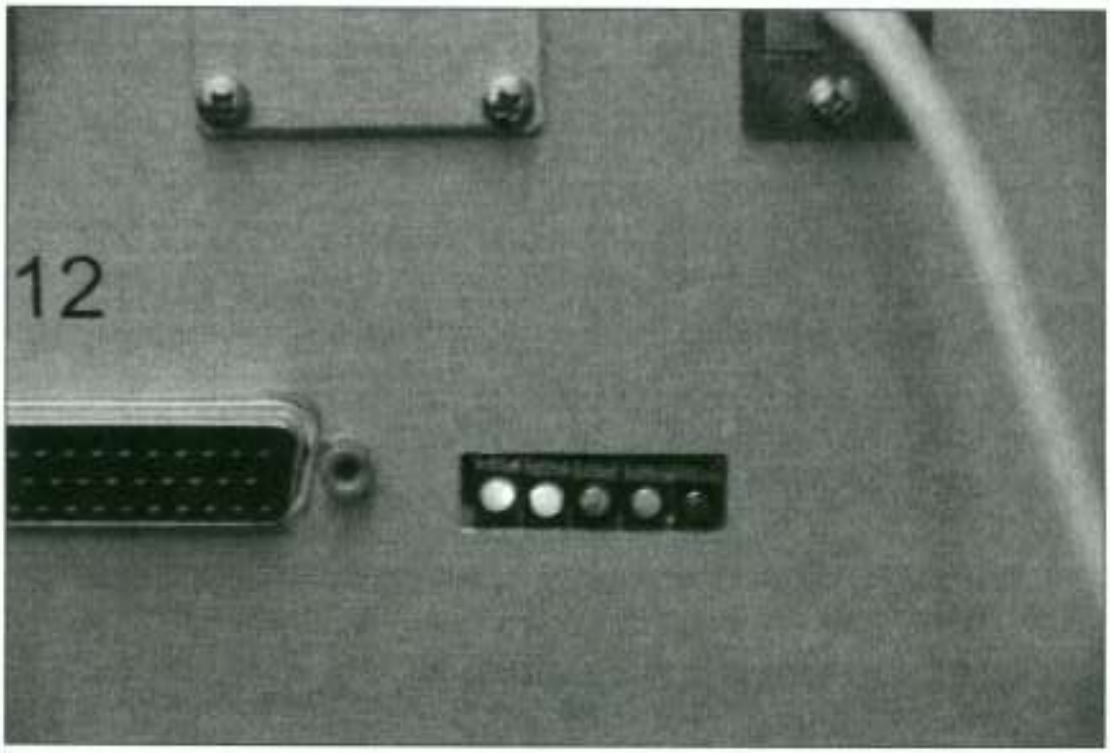

Figure 4 – PS 2 LED Indicator Change to Red.

8. Refresh the PDU B status screen and confirm that LUID 4407's condition reads "**Fault**", and LUID 4406's condition reads "Normal", refer to figure 5.

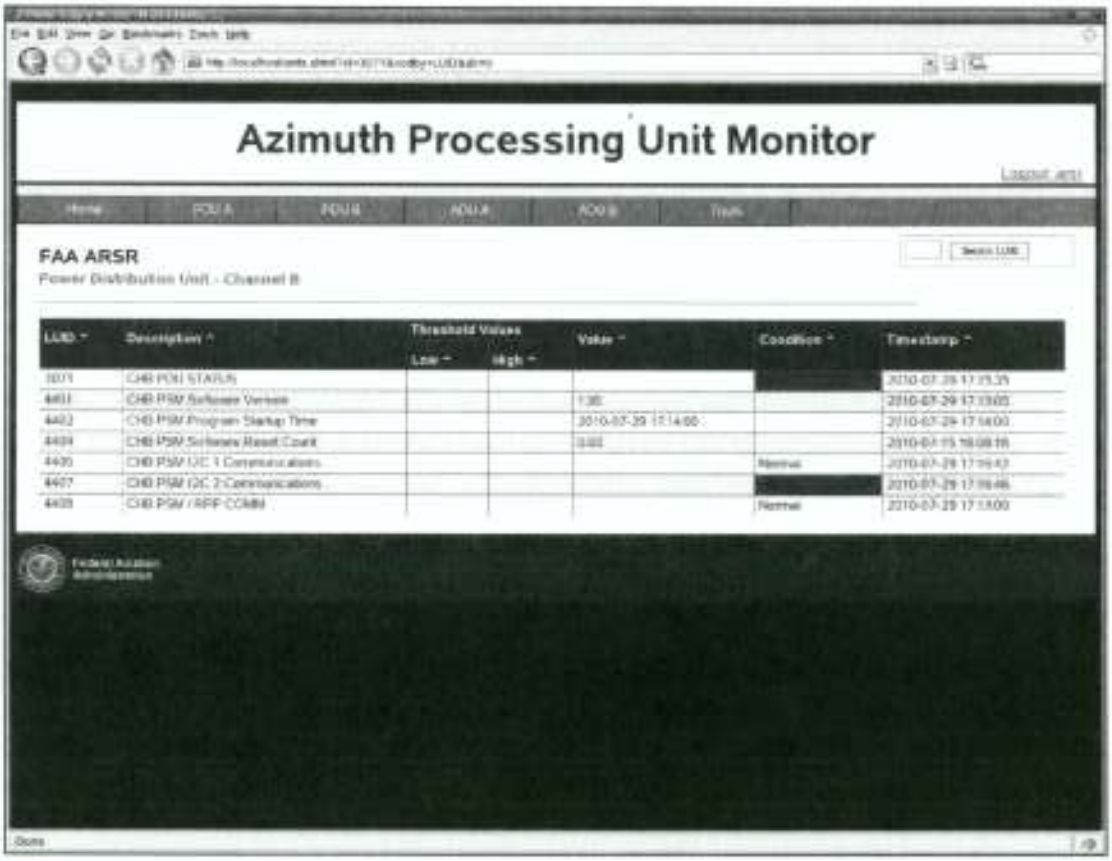

Figure 5 – PDU B Status with 4407 Condition "Fault"

9. Switch PS 2 into the "**ON**" position; confirm both LED indicators are green and LUID 4406 and 4407 conditions read "Normal".