Attachment 2

Drawings

DTFAEN-11-R-00055

Replacement of cable at 3 Antenna Towers, Gainesville, FL

RCAG - GAINESVILLE, FLORIDA
REPLACE ANTENNA TOWER CABLES

REV	APPROVED DATE	DESCRIPTION	JCN	REFLINE DATE	APVD

DEPARTMENT OF TRANSPORTATION
FEDERAL AVIATION ADMINISTRATION
ATO - TECHNICAL OPERATIONS **EASTERN SERVICE AREA**

RCAG
COVER SHEET

GAINESVILLE GAINESVILLE RGNL AIRPORT FL

REVIEWED BY	SUBMITTED BY	APPROVED BY
	Michael Bu[illegible]	Theresa E. Simpson
	PROJECT ENGINEER	MGR: ENGINEERING - ATLANTA
DESIGNED MB	ISSUED BY	DATE 10/26/2010 JCN 807874
DRAWN AT	ENGINEERING SERVICES COMMUNICATIONS	DRAWING NO GNV-D-807874-G001 REV
CHECKED		

ISSUED FOR: CONSTRUCTION

DNV-D-807874-G001.dgn 3/22/2011 9:50:21 AM nathanwilcox stream

EDM GNV-D-807874-G001.dgn

THIS DRAWING PRODUCED ON ASO REGION MICROSTATION SYSTEM

DRAWING LIST

DRAWING NO.	REV.	DATE	DESCRIPTION
GNV-D-807874-G001		10/26/2010	RCAG - COVER SHEET
GNV-D-807874-G002		10/26/2010	RCAG - INDEX SHEET
GNV-D-807874-C001		10/26/2010	RCAG - PROPERTY TIE AND LEASE LIMITS
GNV-D-807874-C002		10/26/2010	RCAG - EXISTING PLOT LAYOUT
GNV-D-807874-C003		10/26/2010	RCAG - PLOT LAYOUT AND NEW CABLING
GNV-D-807874-S001		10/26/2010	RCAG - 80 FT GUYED TOWER SECTIONS AND DETAILS
GNV-D-807874-E001		10/26/2010	RCAG - TOWER CABLES SECTIONS AND DETAILS
GNV-D-807874-E002		10/26/2010	RCAG - ANTENNA TOWER LIGHTNING PROTECTION
GNV-D-807874-E003		10/26/2010	RCAG - FLOOR PLAN

ABBREVIATIONS

SYMBOLS LEGEND

REV	APPROVED DATE	DESCRIPTION	JCN	REDLINE DATE	APVD

DEPARTMENT OF TRANSPORTATION
FEDERAL AVIATION ADMINISTRATION
ATO - TECHNICAL OPERATIONS **EASTERN SERVICE AREA**

RCAG
INDEX SHEET

GAINESVILLE GAINESVILLE RGNL AIRPORT FL

REVIEWED BY	SUBMITTED BY: Michael Boyd, PROJECT ENGINEER	APPROVED BY: Theresa E. Simpson, MGR: ENGINEERING - ATLANTA
DESIGNED MB	ISSUED BY: ENGINEERING SERVICES COMMUNICATIONS	DATE 10/26/2010 JCN 807874
DRAWN AT		DRAWING NO GNV-D-807874-G002 REV
CHECKED		

ISSUED FOR CONSTRUCTION

THIS DRAWING PRODUCED ON ASO REGION MICROSTATION SYSTEM

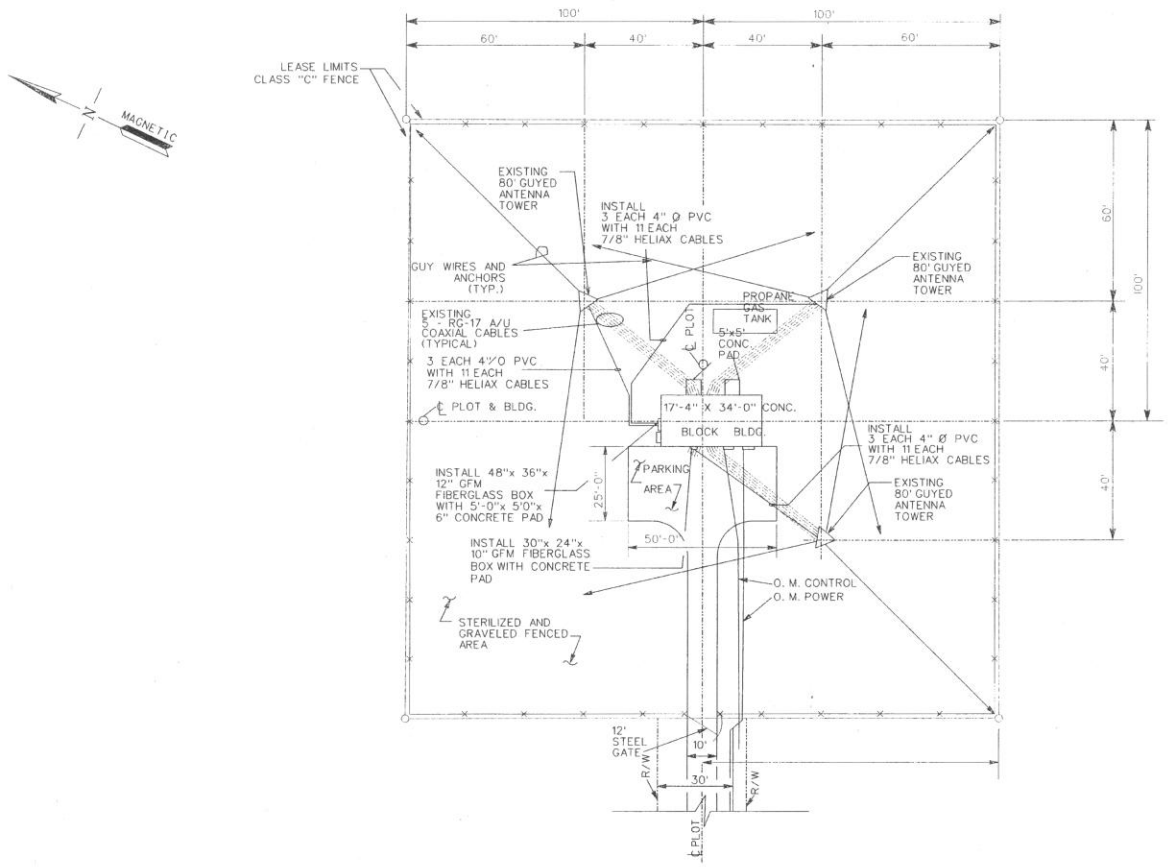

1 C003 PLOT LAYOUT

20 0 20 40

SCALE IN FEET

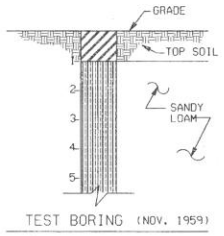

TEST BORING (NOV. 1959)

REV	APPROVED DATE	DESCRIPTION	JCN	REDLINE DATE	APVD

DEPARTMENT OF TRANSPORTATION
FEDERAL AVIATION ADMINISTRATION
ATO - TECHNICAL OPERATIONS EASTERN SERVICE AREA

RCAG

PLOT LAYOUT AND NEW CABLING

GAINESVILLE GAINESVILLE RGNL AIRPORT FL

REVIEWED BY
SUBMITTED BY: PROJECT ENGINEER
APPROVED BY: MGR: ENGINEERING - ATLANTA
DESIGNED MB
DRAWN AT
CHECKED
ISSUED BY: ENGINEERING SERVICES COMMUNICATIONS
DATE 10/26/2010
JCN 807874
DRAWING NO GNV-D-807874-C003
REV

ISSUED FOR CONSTRUCTION

THIS DRAWING PRODUCED ON ASO REGION MICROSTATION SYSTEM

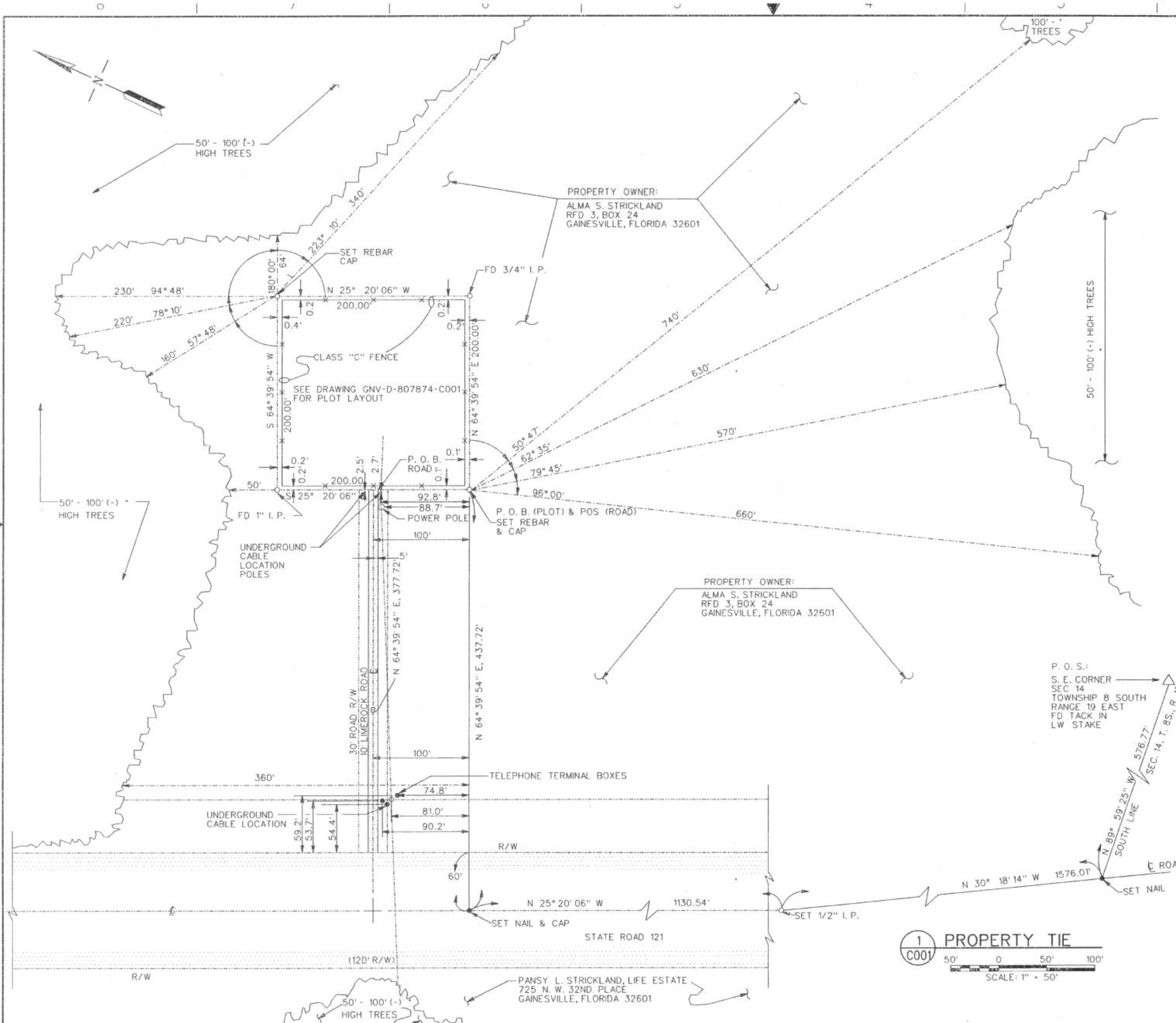

1 C001 PROPERTY TIE

50' 0 50' 100'

SCALE: 1" = 50'

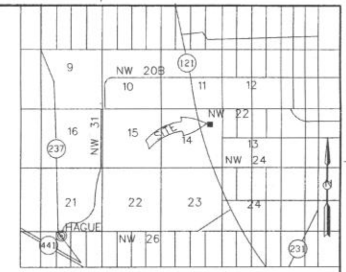

LOCATION MAP

NOT TO SCALE

NOTES

PROPERTY OF:	MRS. ALMA S. STRICKLAND RFD 3, BOX 24 GAINESVILLE, FLORIDA
LEASED PLOT:	200' X 200' - 0.918 ACRE
GEOGRAPHICAL LOCATION:	LATITUDE - 29° 47' 36" LONGITUDE - 82° 22' 45"
BEARINGS:	TRUE
ELEVATIONS:	MSL DATUM
POWER:	FLORIDA POWER CORP., HIGH SPRINGS, FLORIDA
TELEPHONE:	NORTH FLORIDA TELEPHONE COMPANY LIVE OAK, FLORIDA

LEGEND

P. O. S. - POINT OF START

P. O. B. - POINT OF BEGINNING

- - - - - POWER

SURVEY BASED ON DRAWING SO-D-101050-002

REV	APPROVED DATE	DESCRIPTION	JCN	REDLINE DATE	APVD

DEPARTMENT OF TRANSPORTATION
FEDERAL AVIATION ADMINISTRATION
ATO - TECHNICAL OPERATIONS EASTERN SERVICE AREA

RCAG

PROPERTY TIE AND LEASE LIMITS

GAINESVILLE GAINESVILLE RGNL AIRPORT FL

REVIEWED BY | SUBMITTED BY: [signature] PROJECT ENGINEER | APPROVED BY: Theresa F. Simpson MGR, ENGINEERING - ATLANTA

DESIGNED MB | DRAWN AT | CHECKED | ISSUED BY ENGINEERING SERVICES COMMUNICATIONS | DATE 10/26/2010 | JCN 807874 | DRAWING NO GNV-D-807874-C001 | REV

ISSUED FOR: CONSTRUCTION

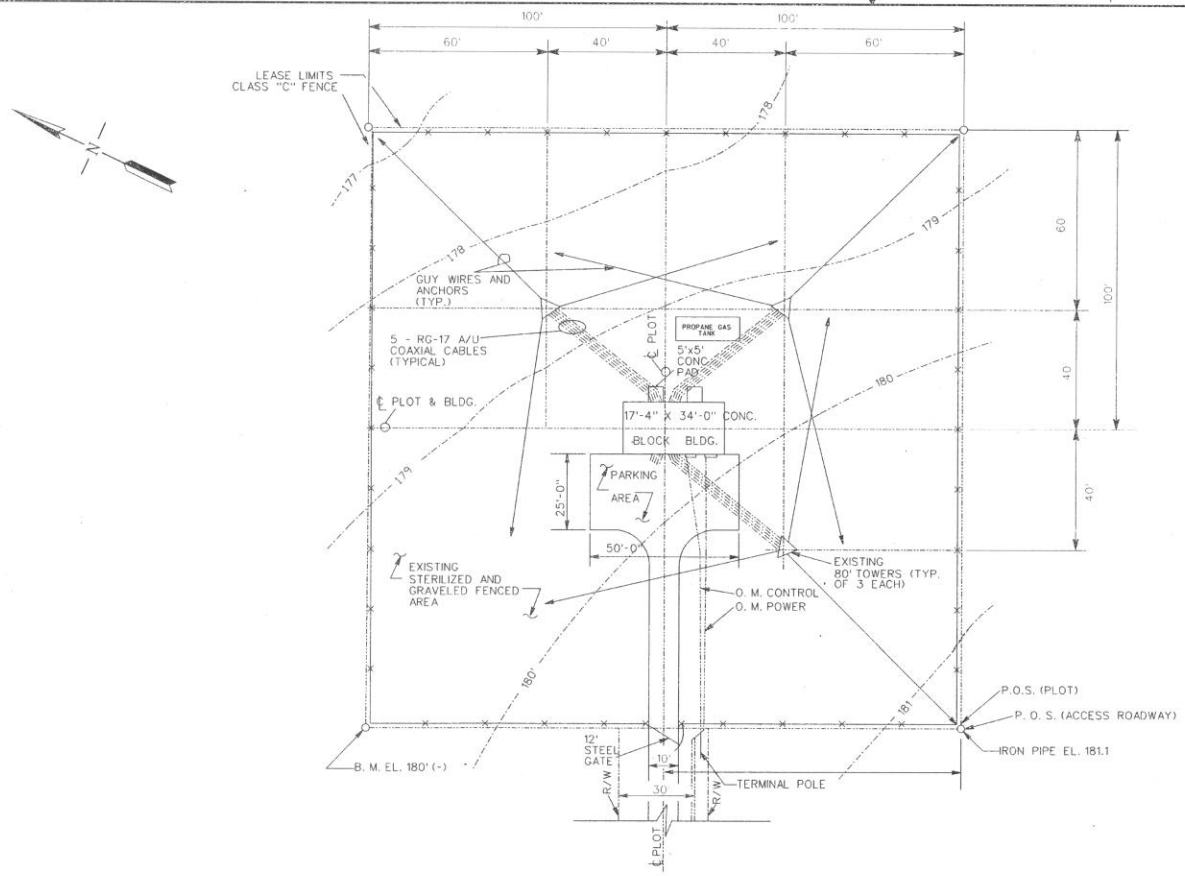

1 C002 PLOT LAYOUT

20' 0 20' 40'

SCALE: 1" = 20'

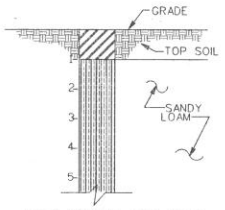

TEST BORING (NOV. 1959)

GNV-D-807874-C002 SUPERSEDES SO-D-101050-003 DATED 7/20/92

REV	APPROVED DATE	DESCRIPTION	JCN	REDLINE DATE	APVD

DEPARTMENT OF TRANSPORTATION
FEDERAL AVIATION ADMINISTRATION
ATO - TECHNICAL OPERATIONS EASTERN SERVICE AREA

RCAG
EXISTING PLOT LAYOUT

GAINESVILLE GAINESVILLE RGNL AIRPORT FL

REVIEWED BY
SUBMITTED BY: Michael Bo[illegible]
PROJECT ENGINEER
APPROVED BY: Theresa E. Simpson
MGR: ENGINEERING - ATLANTA

DESIGNED MB
DRAWN AT
CHECKED
ISSUED BY: ENGINEERING SERVICES COMMUNICATIONS
DATE 10/26/2010 JCN 807874
DRAWING NO GNV-D-807874-C002 REV

ISSUED FOR: CONSTRUCTION

EDM GNV-D-807874-C002.dgn

THIS DRAWING PRODUCED ON ASO REGION MICROSTATION SYSTEM

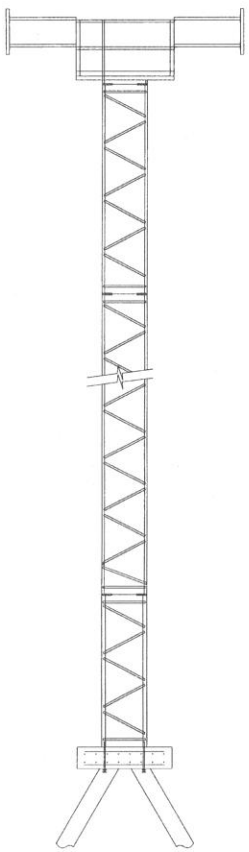

1 S001 **80' GUYED TOWER**
NOT TO SCALE

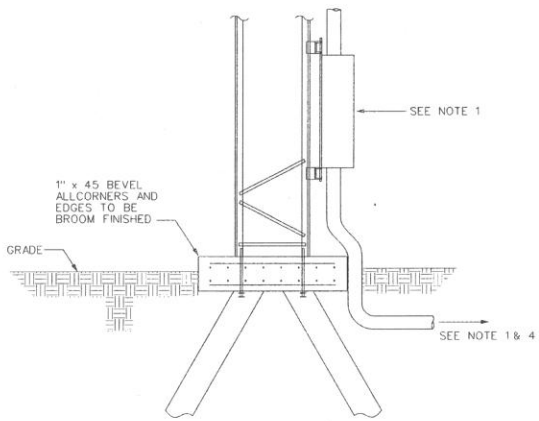

3 S001 **SECTION**
NOT TO SCALE

NOTES

1. INTALL THREE 4" DIAMETER SCHEDULE 80 PVC CONDUITS FROM NEW JUNCTION BOX. UNDERGROUND. A MINIMUM OF 24" DEEP. TO THE EXISTING 80 FT. GUYED ANTENNA TOWER. THE PVC CONDUITS SHALL BE INSTALLED ON THE SIDE OF THE ANTENNA TOWERS FACING THE BUILDING (EXISTING RF CABLES ARE INSTALLED ON THE WEST SIDE OF THE TOWER) TO A NEW (GFM) FIBERGLASS JUNCTION BOX INSTALLED THREE FEET FROM THE BOTTOM OF THE BOX. ABOVE THE TOWER FOUNDATION. THE JUNCTION BOX AND PVC CONDUITS SHALL BE ATTACHED TO THE ANTENNA TOWER USING STAINLESS STEEL (SS) BEAM CLAMPS. UNISTRUT AND SS 3/8" HARDWARE. THE CONTRACTOR WILL HAVE TO OFFSET THE PVC CONDUITS IN THE VERTICAL APPROXIMATELY 12" TO GO UP AND OVER THE EXISTING TOWER FOUNDATION. TWO 4/0 BARE COPPER IN 1 1/4" PVC SHALL BE INSTALLED FROM THE FIBERGLASS JUNCTION BOX TO THE EXISTING TOWER COUNTERPOISE THAT SHOULD BE LOCATED 4-7 FEET UNDERGROUND AROUND THE TOWER FOUNDATION. THE 4/0 TO 4/0 CONNECTIONS SHALL BE EXOTHERMICALLY WELDED TOGETHER USING CADWELD OR EQUAL. THE BUILDING COUNTERPOISE MUST BE UNCOVERED WHILE HAND DIGGING FROM THE NEW JUNCTION BOX INSTALLED ON THE NORTH AND WEST WALLS OF THE EXISTING BUILDING.

2. INSTALL ONE GFM 48" X 36" X 12" FIBERGLASS JUNCTION BOX ON THE NORTH WALL APPROXIMATLY 10 FEET FROM THE EAST END OF THE BUILDING TO THE CENTER OF THE BOX. INSTALL THE GFM 30" X 24" X 10" FIBERGLASS JUNCTION BOX ON THE WEST WALL APPROXIMATLY 11'-2" FROM THE NORTH END OF THE BUILDING TO THE CENTER OF THE BOX. INSTALL THE JUNCTION BOX 2'-6" ABOVE FINISH GRADE TO BOTTOM OF BOX.

3. CONTRACTOR MUST EXPECT TO HAND DIG FROM JUNCTION BOX ON THE BUILDING OUT APPROXIMATELY 10 FEET FOR THE INSTALLATION OF THE PVC DUCTBANK. THE PVC MUST BE INSTALLED 24" BELOW FINISHED GRADE. THE CONTRACTOR IS EXPECTED TO HAND DIG UNTIL CLEAR OF THE BUILDING COUNTERPOISE WHICH SHOULD BE 24" BELOW GRADE. THE CONTRACTOR MUST HAND DIG WHEN CROSSING THE O.M. CONTROL AND O.M. POWER. THE CONTRACTOR IS NOT EXPECTED TO ENCOUNTER ANY OTHER UNDERGROUND UTILITIES IN THE INSTALLATION OF THE CABLE DUCTBANK.

4. INSTALL 11 RUNS OF 7/8" HELIAX CABLE (GFM) BETWEEN NEW FIBERGLASS JUNCTION BOX (GFM) INSTALLED ON WEST WALL OF EXISTING BUILDING AND THE FIBERGLASS JUNCTION BOX AT THE BOTTOM OF ANTENNA TOWER A. INSTALL 11 RUNS OF 7/8 " HELIAX CABLE (GFM) BETWEEN NEW FIBERGLASS JUNCTION BOX (GFM) INSTALLED ON BOTTOM OF TOWER AND THE FIBER-GLASS JUNCTION BOX AT THE TOP OF ANTENNA TOWER. INSTALL 11 RUNS OF 7/8" HELIAX CABLE (GFM) BETWEEN NEW FIBERGLASS JUNCTION BOX (GFM) INSTALLED ON NORTH WALL OF EXISTING BUILDING AND THE FIBERGLASS JUNCTION BOX AT THE BOTTOM OF ANTENNA TOWER B. INSTALL 11 RUNS OF 7/8" HELIAX CABLE (GFM) BETWEEN NEW FIBERGLASS JUNCTION BOX (GFM) INSTALLED ON BOTTOM OF TOWER AND THE FIBER-GLASS JUNCTION BOX AT THE TOP OF ANTENNA TOWER. INSTALL 11 RUNS OF 7/8" HELIAX CABLE (GFM) BETWEEN NEW FIBERGLASS JUNCTION BOX (GFM) INSTALLED ON NORTH WALL OF EXISTING BUILDING AND THE FIBERGLASS JUNCTION BOX AT THE BOTTOM OF ANTENNA TOWER C. INSTALL 11 RUNS OF 7/8" HELIAX CABLE (GFM) BETWEEN NEW FIBERGLASS JUNCTION BOX (GFM) INSTALLED ON BOTTOM OF TOWER AND THE FIBER-GLASS JUNCTION BOX AT THE TOP OF ANTENNA TOWER. SEE DRAWING GNV-D-807874-E01. -E02 & -E03 FOR DETAILS.

5. CONTRACTOR MUST REMOVE THE EXISTING RF CABLES AND CONDUITS MUST BE CUT OFF ONE FOOT BELOW GRADE AND ABANDONED IN PLACE. THIS WORK CAN ONLY BE ACCOMPLISHED AFTER THE NEW CABLES ARE IN OPERATION. AFTER NEW CABLES ARE IN OPERATION CONTRACTOR MUST UNCOVER RF CABLES OUTSIDE BUILDING. REMOVE CABLES FROM BUILDING. CUT CONDUITS OFF FLUSH WITH FLOOR. AND SEAL OPENING WITH GROUT OR EQUAL.

6. THE CONTRACTOR MUST REMOVE AND SALVAGE THE GRAVEL IN AND AROUND THE AREA OF CONSTRUCTION AND RESPREAD AFTER ALL UNDERGROUND WORK IS COMPLETED. THE CONTRACTOR WILL BE EXPECTED TO FURNISH AND INSTALL A MAXIMUM OF 15 TONS OF #57 STONE OR EQUAL TO RE-ESTABLISH A MINIMUM OF THREE INCHES OF GRAVEL OVER THE DISTURBED CONSTRUCTION AREA.

REV	APPROVED DATE	DESCRIPTION	JCN	REDLINE DATE	APVD

DEPARTMENT OF TRANSPORTATION
FEDERAL AVIATION ADMINISTRATION
ATO - TECHNICAL OPERATIONS **EASTERN SERVICE AREA**

RCAG
80 FT GUYED TOWER
SECTIONS AND DETAILS

GAINESVILLE GAINESVILLE RGNL AIRPORT FL

REVIEWED BY
SUBMITTED BY: PROJECT ENGINEER
APPROVED BY: MGR. ENGINEERING - ATLANTA
DESIGNED MB
DRAWN AT
CHECKED
ISSUED BY: ENGINEERING SERVICES COMMUNICATIONS
DATE 10/26/2010 JCN 807874
DRAWING NO GNV-D-807874-S001 REV

ISSUED FOR CONSTRUCTION

THIS DRAWING PRODUCED ON ASD REGION MICROSTATION SYSTEM

NOTES

1. POWER PANEL A
2. EMRS
3. EMERGENCY DISCONNECT SWITCH
4. POWER PANEL B
5. ENVIRONMENTAL PANEL
6. SURGE ARRESTOR
7. MAIN DISCONNECT SWITCH
8. ENG ISOLATION BY-PASS SWITCH

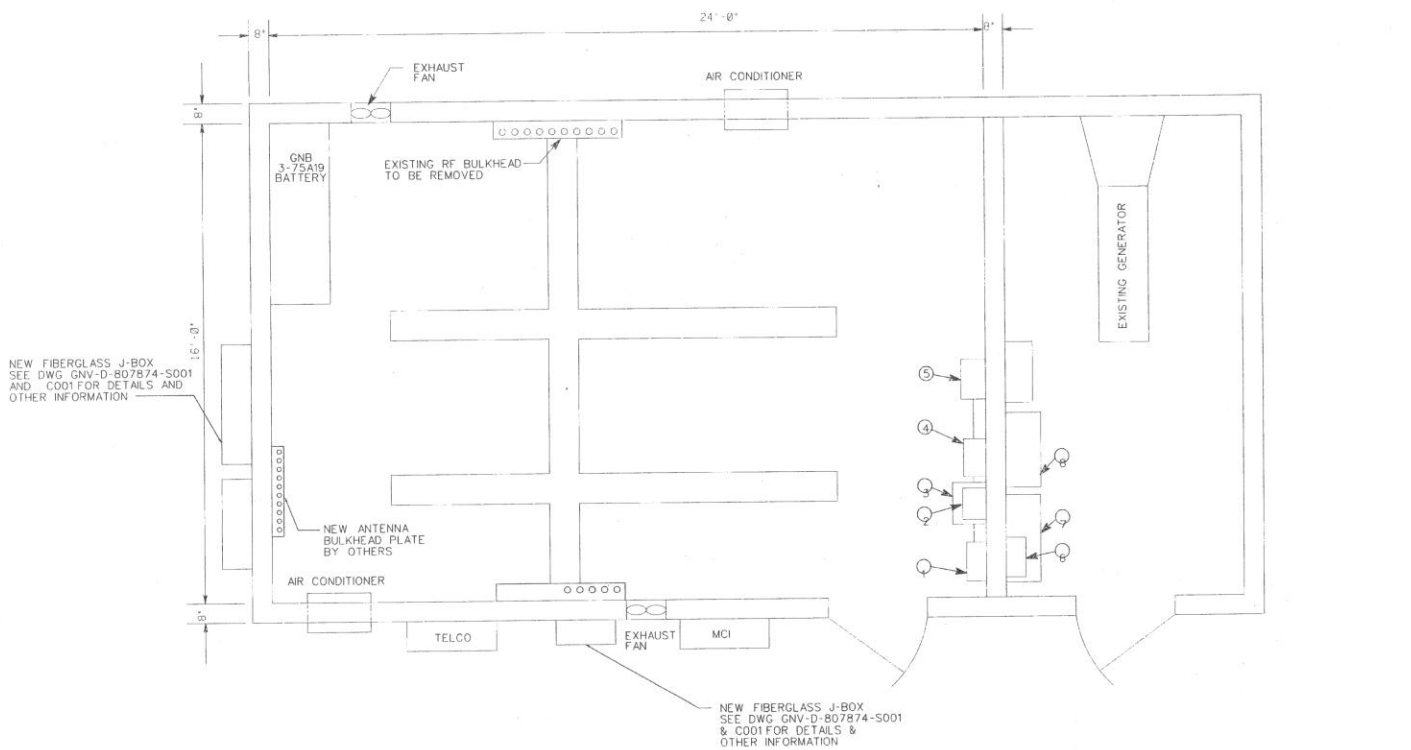

1' 0 1' 2' 5'
SCALE: 1/2" = 1'-0"

REV	APPROVED DATE	DESCRIPTION	JCN	REDLINE DATE	APVD

DEPARTMENT OF TRANSPORTATION
FEDERAL AVIATION ADMINISTRATION
ATO - TECHNICAL OPERATIONS **EASTERN SERVICE AREA**

RCAG
FLOOR PLAN

GAINESVILLE GAINESVILLE RGNL AIRPORT FL

REVIEWED BY	SUBMITTED BY	APPROVED BY
	PROJECT ENGINEER	MGR: ENGINEERING - ATLANTA
	DESIGNED MB	DATE 10/26/2010 JCN 807874
	DRAWN AT	DRAWING NO GNV-D-807874-E003 REV
	CHECKED	

ISSUED BY: ENGINEERING SERVICES COMMUNICATIONS

ISSUED FOR: CONSTRUCTION

THIS DRAWING PROVIDES OF ADD PESCH MICROSTATION SYSTEM

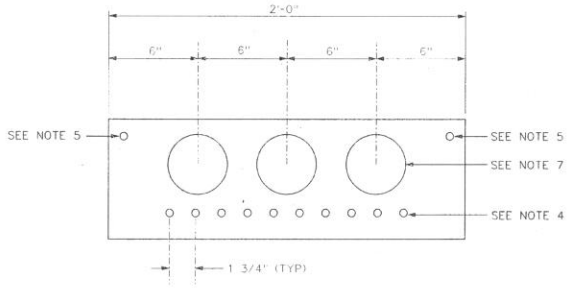

6 E001 JUNCTION BOX HOLE LAYOUT
SCALE: 3" = 1'-0"

NOTES

1. THE 7/8" HELIAX CABLE MUST NOT BE BENT CLOSER THAN A 12" RADIUS.
2. CUT SECTION OF EXPANDED METAL GRATING AS REQUIRED TO ROUTE CONDUITS UP TO JUNCTION BOX. ALL CUT EDGES MUST BE COLD GALVANIZED. FRAME CUT OPENING WITH 2"x 2"x 1/4" ANGLE IRON. GALV.
3. CONTRACTOR SHALL INSTALL A 36"x 30"x 10" JUNCTION BOX (GFM) ON TOP OF THE TOWER AND 30"x 24"x 10" JUNCTION BOX ON BOTTOM OF TOWER (GFM) (FIBER-GLASS, NEMA 4X, ATTACH TO TOWER USING A STAINLESS STEEL UNISTRUT (P1000) FRAME AND STAINLESS STEEL BOLTS. VERIFIED BOX LOCATION WITH FAA RESIDENT ENGINEER.
4. CONTRACTOR SHALL INSTALL 11 EACH 1/2" DIA WATER TIGHT STRAIN RELIEF CONNECTORS (GFM) (T&B 2673) FOR CABLE INSTALLED BY OTHERS. IN THE BOTTOM OF THE JUNCTION BOX.
5. CONTRACTOR SHALL INSTALL 2 EACH 1/2" DIA STRAIN RELIEF CONNECTOR (GFM) FOR THE THOMPSON 32X FROM THE TOWER LOOP.
6. ALL CUT EDGES, CORNERS DRILLED HOLES AND OTHER ABRAIDED AREAS COLD GALVANIZED.
7. CONTRACTOR MUST FURNISH AND INSTALL 1 5/8"x 1 5/8" STAINLESS STEEL UNISTRUT 24" IN LENGTH TO THE ANTENNA TOWER AT THE PREFABRICATED ANTENNA TOWER HORIZONTAL ANGLES MARK 9535. THE 3 EACH 4" Ø CONDUITS ARE THEN FASTENED TO THE UNISTRUT WITH STAINLESS STEEL PIPE CLAMPS. ALL MOUNTING HARDWARE SHALL BE STAINLESS STEEL. INSTALL 11 EACH 7/8" HELIAX, ANDREW P/N LDF5, WITH 4 IN 2 CONDUITS AND 3 IN 1 PVC CONDUIT.
8. CONTRACTOR SHALL INSTALL 2- #4/0 GROUND WIRE THROUGH 1 1/4" Ø PVC INTO EACH OF THE BOTTOM JUNCTION BOXES FOR GROUNDING BY OTHERS. THREE FEET OF WIRE COILED IN EACH BOX FOR USE BY OTHERS.

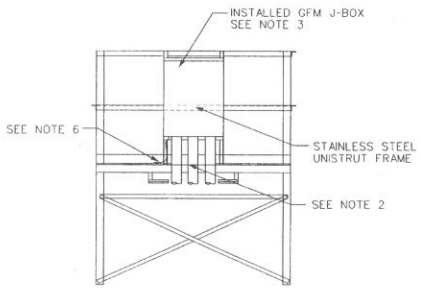

2 E001 JUNCTION BOX ELEVATION
NOT TO SCALE

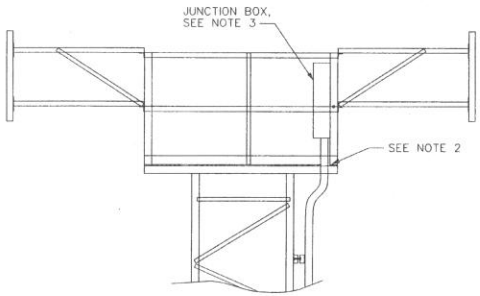

4 E001 JUNCTION BOX SECTION
NOT TO SCALE

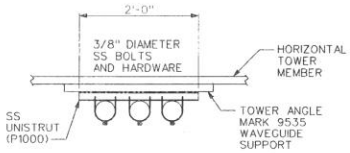

7 E001 CONDUIT SUPPORT PLAN
SCALE: 1" = 1'-0"

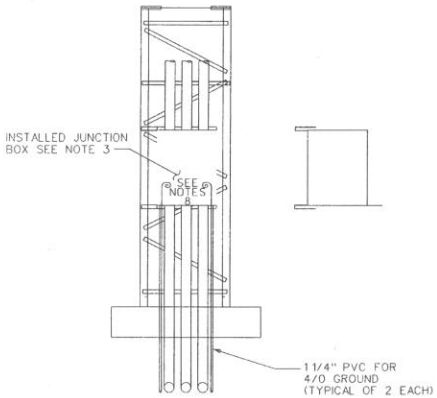

3 E001 TOWER CONDUIT ELEVATION
NOT TO SCALE

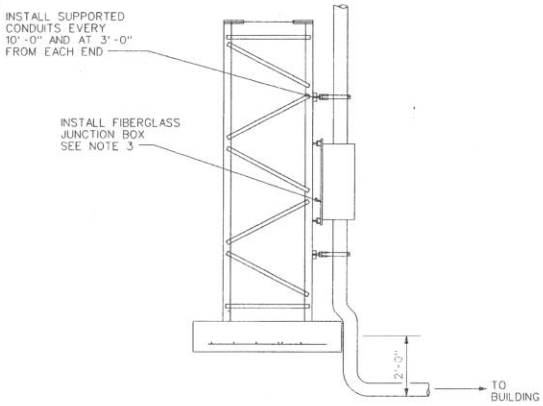

5 E001 TOWER CONDUIT SECTION
NOT TO SCALE

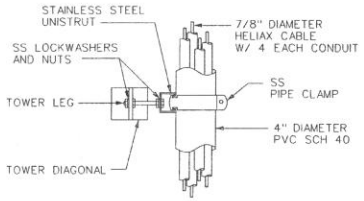

8 E001 CONDUIT SUPPORT SECTION
NOT TO SCALE

1' 0 1' 2'
SCALE: 1" = 1'-0"

3" 0 3" 6" 9"
SCALE: 3" = 1'-0"

REV	APPROVED DATE	DESCRIPTION	JCN	REDLINE DATE	APVD

DEPARTMENT OF TRANSPORTATION
FEDERAL AVIATION ADMINISTRATION
ATO - TECHNICAL OPERATIONS — EASTERN SERVICE AREA

RCAG
TOWER CABLES SECTIONS
AND DETAILS

GAINESVILLE — GAINESVILLE RGNL AIRPORT — FL

REVIEWED BY: SUBMITTED BY: PROJECT ENGINEER
APPROVED BY: MGR: ENGINEERING - ATLANTA
DESIGNED MB
DRAWN AT
CHECKED
ISSUED BY: ENGINEERING SERVICES COMMUNICATIONS
DATE 10/26/2010 JCN 807874
DRAWING NO GNV-D-807874-E001 REV

ISSUED FOR CONSTRUCTION

THIS DRAWING PRODUCED ON AND REGYON MICROSTATION SYSTEM

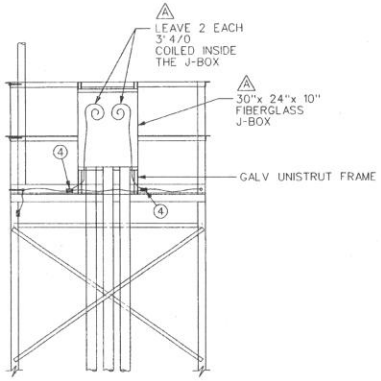

1 E002 JUNCTION BOX ELEVATION
NOT TO SCALE

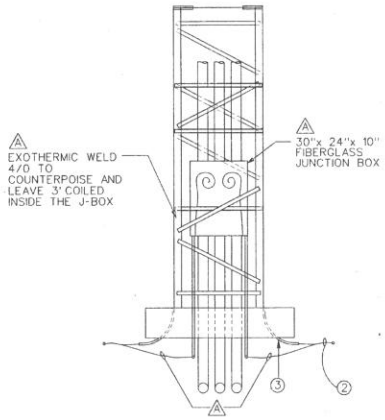

2 E002 TOWER CONDUIT ELEVATION
NOT TO SCALE

NOTES

1. SUPPORTED THE CONDUCTOR AT A MINIMUM OF 2'-0" SPACING AROUND THE PERIMETER OF THE PLATFORM.
2. INSTALLED DOWN CONDUCTOR WITH AN MINIMUM OF BENDS.
3. ALL GROUNDING CONNECTIONS BELOW GRADE BY EXOTHERMIC WELD.
4. (A) INSTALLED JUNCTION BOX AT 90° FROM HATCH OPENING DIRECTION.

LEGEND

1. GROUND ROD, COPPER CLAD 3/4" DIA x 10'
2. 4/0 AWG BARE COPPER, 28 STRANDS, WT 660 LBS/1000 FT
3. CONDUIT, RIGID PLASTIC 1 1/4"
4. PARALLEL CLAMP, THOMPSON #4248 OR EQUAL

(A) WORK TO BE DONE UNDER THIS CONTRACT. ALL OTHER ITEMS SHOWN ARE EXISTING

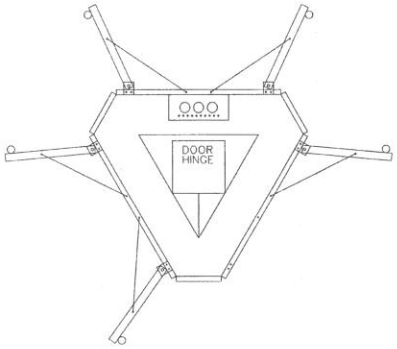

3 E002 JUNCTION BOX SECTION
NOT TO SCALE

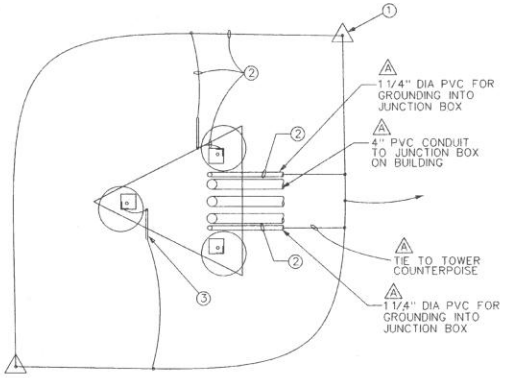

4 E002 TOWER CONDUIT SECTION
NOT TO SCALE

REV	APPROVED DATE	DESCRIPTION	JCN	REDLINE DATE	APVD

DEPARTMENT OF TRANSPORTATION
FEDERAL AVIATION ADMINISTRATION
ATO - TECHNICAL OPERATIONS EASTERN SERVICE AREA

RCAG
ANTENNA TOWER LIGHTNING PROTECTION

GAINESVILLE GAINESVILLE RGNL AIRPORT FL

REVIEWED BY
SUBMITTED BY: PROJECT ENGINEER
APPROVED BY: MGR: ENGINEERING - ATLANTA
DESIGNED MB
DRAWN AT
CHECKED
ISSUED BY: ENGINEERING SERVICES COMMUNICATIONS
DATE 10/26/2010 JCN 807874
DRAWING NO GNV-D-807874-E002 REV

ISSUED FOR CONSTRUCTION

THIS DRAWING PRODUCED ON ASC DESIGN MIGRATION SYSTEM