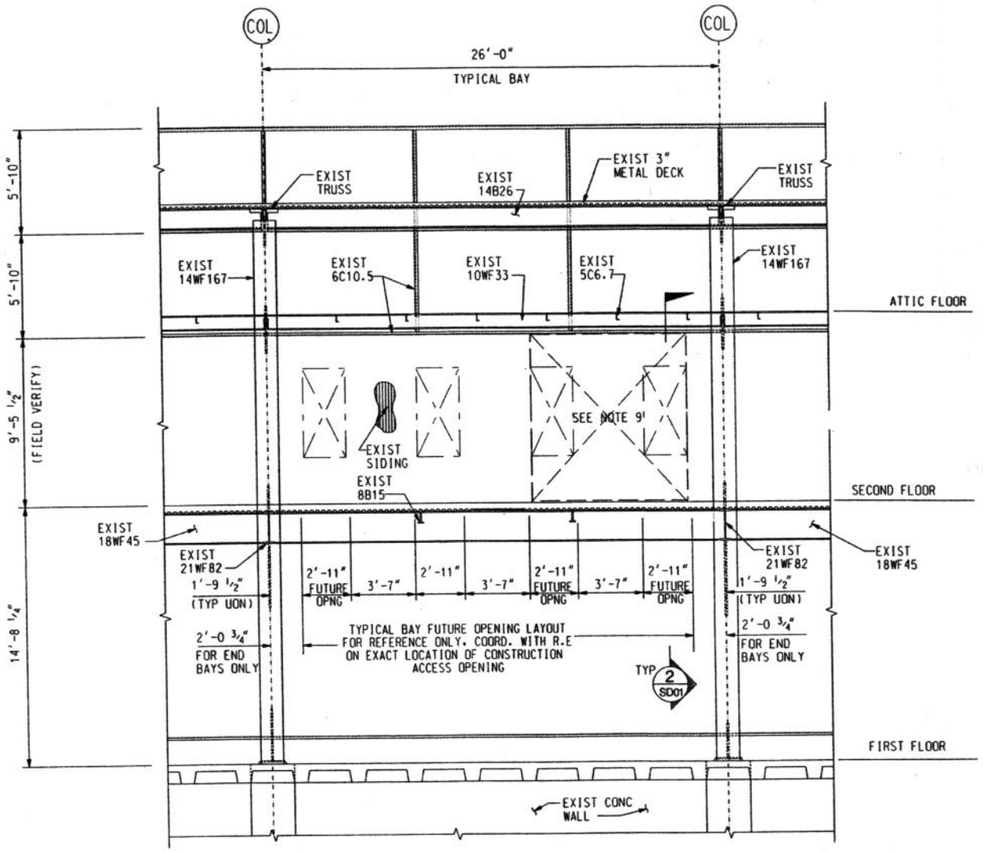

1 SD01 CONSTRUCTION ACCESS OPENING DEMOLITION - ELEVATION
SCALE: 1/8" = 1'-0"

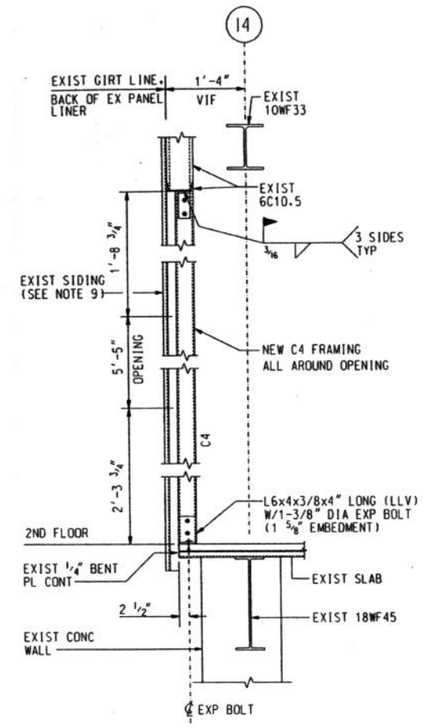

2 SD01 STRUCTURAL BRACING @ ACCESS OPENING
SCALE: 1 1/2" = 1'-0"

NOTES:

1. CONTRACTOR SHALL VERIFY ALL DIMENSIONS AND EXISTING CONDITIONS AFFECTING THE WORK AT THE JOB SITE.
2. COORDINATE LOCATION AND SIZE OF ALL OPENINGS WITH ARCHITECTURAL AND MECHANICAL DRAWINGS AND RESPECTIVE CONTRACTORS BEFORE FABRICATION AND ERECTION OF STRUCTURAL STEEL.
3. NO WELDING EQUIPMENT SHALL BE POWERED FROM THE FACILITY ELECTRICAL SYSTEM.
4. STRUCTURAL STEEL IS DESIGNED IN CONFORMANCE WITH AISC MANUAL OF STEEL CONSTRUCTION, ALLOWABLE STRESS DESIGN, NINTH EDITION.
5. STRUCTURAL STEEL SHALL BE ASTM A36, UNLESS OTHERWISE NOTED.
6. ALL WELDING TO BE IN CONFORMANCE WITH AMERICAN WELDING SOCIETY. ALL WELDING SHALL BE DONE USING E70XX ELECTRODES.
7. ALL FIELD CONNECTIONS SHALL BE MADE WITH 3/4 INCH DIAMETER A325 BOLTS IN BEARING TYPE CONNECTIONS, UNLESS OTHERWISE NOTED.
8. STRUCTURAL STEEL SHALL BE FIREPROOFED AS PER ARCHITECTURAL DRAWINGS A004, A005, A010 AND SPECIFICATIONS.
9. FRAMING FOR CONSTRUCTION ACCESS OPENING SHALL BE INSTALLED FROM INSIDE. CUT OPENINGS AFTER C4 JAMBS ARE INSTALLED. CONTRACTOR SHALL PROVIDE TEMPORARY BRACING AS REQUIRED TO SUPPORT EXISTING EXTERIOR WALL PANELS PRIOR TO CUTTING NEW WINDOW OPENINGS AND INSTALLING REMAINDER OF THE FRAMING. ATTACH EXISTING SIDING TO NEW FRAMING AROUND THE OPENING WITH NO. 12 SELF-DRILLING SEALING SCREWS. SEE DETIALS 3,4 &5 THIS SHEET.

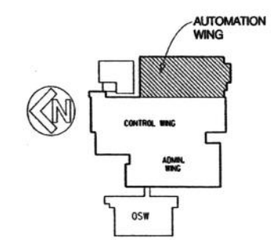

KEY PLAN

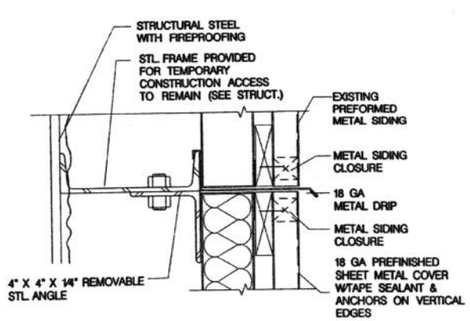

3 SD01 NEW MTL. SIDING @ TEMP. OPEN'G - HEAD
SCALE: 3" = 1'-0"

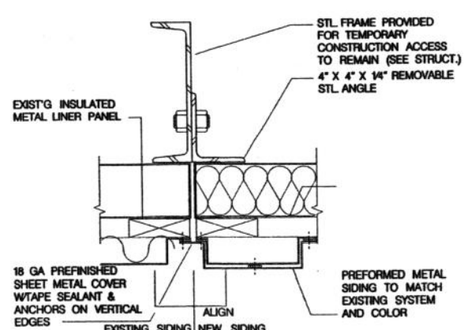

4 SD01 NEW MTL. SIDING @ TEMP. OPEN'G - JAMB
SCALE: 3" = 1'-0"

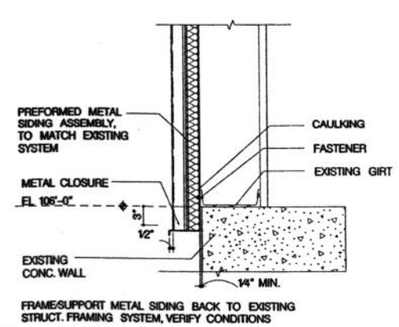

5 SD01 NEW MTL. SIDING @ TEMP. OPEN'G - SILL
SCALE: 1 1/2" = 1'-0"

JE JACOBS

REV	DATE	DESCRIPTION	JCN	REDLINE DATE	APVD

REGISTERED PROFESSIONAL ENGINEER HONGWEI GONG No. 5018 Exp. 6-30-2009 STRUCTURAL STATE OF CALIFORNIA
03/31/08

SEATTLE ARTCC
AUBURN, WA

DEPARTMENT OF TRANSPORTATION
FEDERAL AVIATION ADMINISTRATION
WESTERN SERVICE AREA, ENROUTE — SEATTLE, WA

ARTCC
AUTOMATION WING RENOVATION
DEMOLITION, ASBESTOS, & ATTIC PROJECT
DEMOLITION - BUILDING ELEVATION & DETAILS

AUBURN — SEATTLE ARTCC — WA

REVIEWED BY	SUBMITTED BY	APPROVED BY
	CHRIS YADEN	POWELL UNDERWOOD
	PROJECT ENGINEER, WSA ENROUTE	PLATFORM MANAGER, WSA ENROUTE
	DESIGNED / ISSUED BY: WESTERN SERVICE AREA ENROUTE	DATE 4-2-2008 JCN 71022
	DRAWN CLC	DRAWING NO ZSE-D-ARTCC-31-AW2-SD01 REV
	CHECKED PU	

R:\FS#54204\ZSE\Demolition\SD01 Building Elevation & Detailsdgn 3/31/2008 4:13:38 PM #NAME#