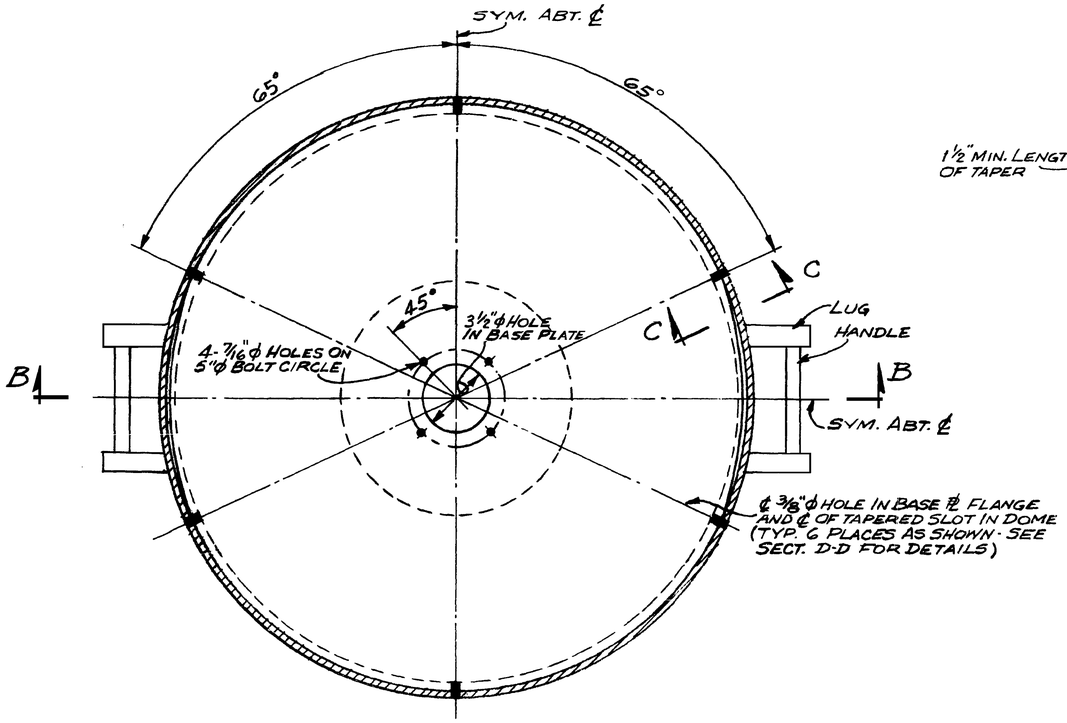

SECTION A-A

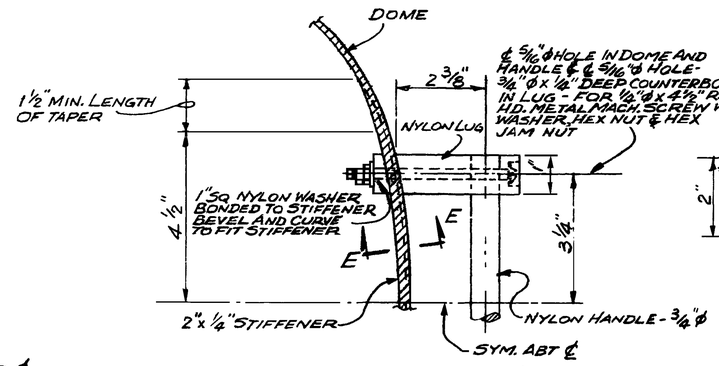

SECTIONAL PLAN - HANDLE ASSEMBLY

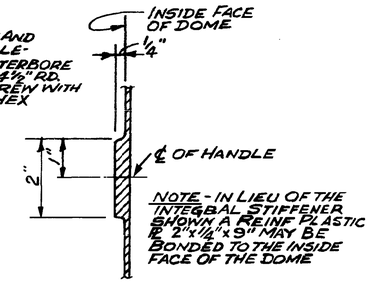

SECTION E-E

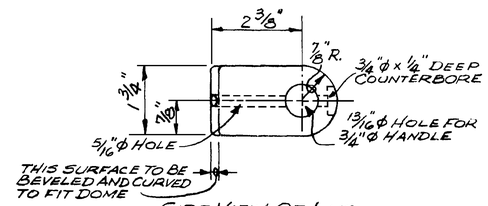

SIDE VIEW OF LUG

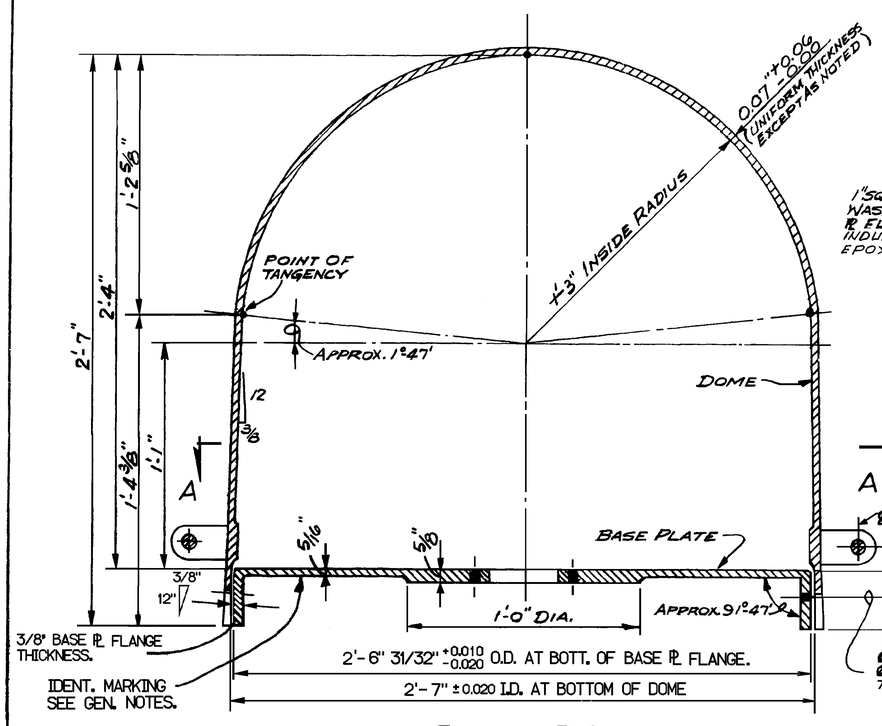

SECTION B-B

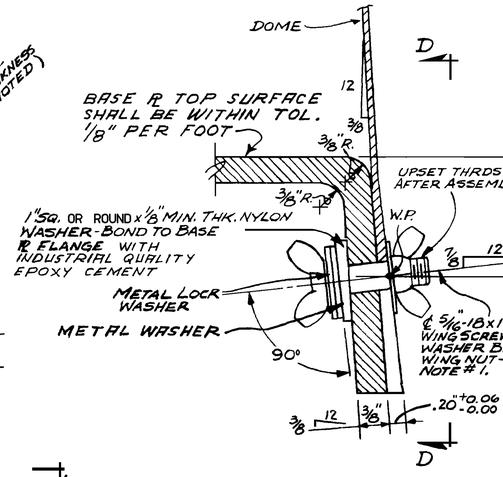

SECTION C-C

TYP. CONN. DOME TO BASE ℞ - SEE SECT. A-A FOR LOCATIONS

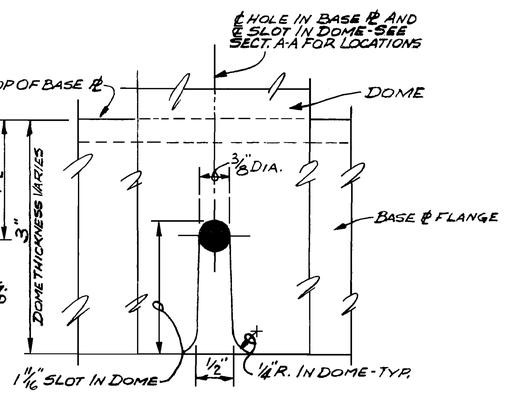

SECTION D-D

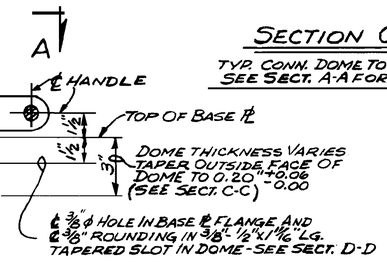

NOTE #1 - WING SCREWS AND WASHER BASE WING NUTS SHALL BE STAINLESS STEEL.

SUPERSEDES DWG. D-5124

GENERAL NOTES

SPECIFICATIONS - LATEST ISSUE OF SPEC. FAAD-F-1365

MATERIAL - FIBER GLASS REINFORCED POLYESTER RESIN PLASTIC, UNLESS NOTED AND COLORED IN ACCORDANCE WITH SPEC. FAAD-F-1365 METAL BOLTS NUTS AND WASHERS SHALL BE STAINLESS STEEL CONFORMING TO ASTM A320 (ANY GRADE) UNLESS NOTED NYLON SHALL BE EQUAL TO ASTM D 789 DESCRIPTION 6, GRADE 3 OR 4

SHOP CONNECTIONS - BONDED SHOP CONNECTIONS WHERE INDICATED ON THE DRAWING SHALL BE MADE UNDER PRESSURE AND HEAT.

FIELD CONNECTIONS - BOLTED UNLESS NOTED

HOLES - 3/8" DIA. UNLESS NOTED

FABRICATION - UNLESS NOTED, ALL FILLETS SHALL HAVE A MINIMUM RADIUS OF 1/4 INCH.

MARKING - AT THE LOCATION SHOWN ON THE DRAWING THE BOTTOM SURFACE OF THE BASE PLATE SHALL BE PERMANENTLY EMBOSSED OR ENGRAVED WITH THE FOLLOWING WORDING:

FEDERAL AVIATION ADMINISTRATION
ILS OR VOR/VORTAC
ANT. SHELTER TYPE 3
DWG. D-5701
MANUFACTURERS NAME AND IDENTIFYING CODE LETTERS

TOL:

± 0.03 UNLESS OTHERWISE NOTED.

NSN 5985-00-198-4906

REV. LTR.	DATE	DESCRIPTION	CHECKED	
G	2-8-07	REV. Dims. SEC. B-B TO "+0.010 -0.020 & ±0.020	BH	BH
F	7 1 02	CHD'ED NYLON WASHER ON SEC C-C TO SQR OR ROUND	PCS	PCS
E	9 28-01	CHG TOL ± 01 TO ± 03	PCS	PCS
D	10-30-91	SPEC NO WAS F.A.A.-E-2055	JAH	RO
C	7-15 91	MADE CHG'S TO NOTE #1, SECT. C-C & ADDED TOL ±0 01	[illegible]	RO
B	4-9-79	ADDED NSN	[illegible]	[illegible]
A	5-28-72	REDRAWN AND MINOR REVISION	[illegible]	[illegible]

DEPARTMENT OF TRANSPORTATION
FEDERAL AVIATION ADMINISTRATION
WASHINGTON, D.C. 20591

ILS OR VOR/VORTAC FACILITY
ANTENNA SHELTER TYPE 3
2½ FT HIGH PLASTIC DOME
DESIGN DETAILS

REVIEWED BY

SUBMITTED BY SIGNED BY O.L. BRANDENBURGER

APPROVED BY SIGNED BY R.J. ALPHER

DESIGNED BY
DRAWN BY
CHECKED BY

ISSUED BY AIRWAY FACILITIES SERVICE
ENVIRONMENTAL ENGINEERING DIVISION

DATE 8-28-[illegible]

DRAWING NO D-5701

REV LTR G