STATEMENT OF WORK

FOR SARASOTA RCAG NORTHWEST TOWER

ATO-W-06-001-45558, TASK ASO-4

BACKGROUND:

The northwest tower for the Sarasota RCAG is in need of replacement. The tower has extensive corrosion on the structure and supporting hardware, and the ladder system and safety rails have been deemed unsafe for climbing by safety personnel. Maintenance on this tower is only accomplished with increased safety risks and at increased expense to the SRQ SSC.

The other three towers on site are in need of rehabilitation to the extent of transmission line and hanger replacement, corrosion control, and painting, and possible structural support replacement.

Scope of work:

Contractor shall demolish and haul away the existing 50' tower, and foundation, as per Sarasota county requirements. Demolition permit is required and specific costs and rulings can be obtained from the Sarasota planning and development services at 941-861-6176. Initial inquiries indicate demolition permitting costs of @$400.00 and installation costs of @$400.00 - $800.00 depending on final proposal price of contract.

Contractor shall build and install new concrete foundation, with tower anchoring system as per foundation attachment. Install new 4" underground PVC conduit, 24" below grade, from existing building into new tower base. Install tower grounding as per attached RCAG PLCT Layout and detailed drawings, FAA-STD-019E and FAA provided drawings that are applicable.

Contractor shall install new 50' 4-sided, 6.5 foot squared top, freestanding, hot-dipped galvanized tower capable of withstanding 130 MPH (sustained) and 150 (3 second) MPH winds. No painting is required for this style tower. An acceptable 50' tower is available through Young's Manufacturing, 1 Lower Airport road, Montrose, CO 81401, 970-249-5339. While this exact tower is not required, equivalent tower in all respects must be used. Contractor shall attach new ladder system and safety rails as per manufacturer recommendations and IAW OSHA standard 29 CFR 1910.27, Fixed Ladders, and ANSI A14.3, Safety Requirements for Fixed Ladders.

Contractor shall install ten each (10) new transmission lines on newly installed tower with Andrews LDF5-50 heliax or suitable substitute to the cable junction box located inside the RCAG equipment building. Amount of heliax required is @ 2000' feet. Hangers for transmission lines are to be installed and spaced no more than 3' (feet) for the length of the entire run on the tower. Use Andrews LDF5-50A L5 CLICK 3 stack hangers or a suitable substitute. See attachment. Contractor shall ground the transmission lines to the top and bottom of the transmission lines to the tower with Andrews SGL5-10B2 ground kit or suitable substitute. Purchase and install 85 Andrews L5PNF-RPC female connectors and install one (1) on each end of transmission line, two (2) per run.

All grounding is to be accomplished per attached drawings, and IAW FAA-STD-019E, a copy of which can be provided upon request. New counterpoise is to be installed and all below grade connections are to be exothermic welds only.

The remaining three (3) towers require corrosion control, painting and replacement of the transmission lines and installation of new hangers. Contractor shall replace any and all corroded, missing or damaged hardware (nuts, bolts, washers or cross members) with similar galvanized hardware, and tower elements such as structural supports as needed. Contractor shall install all connectors and grounding kits to newly installed transmission lines.

Corrosion control consists of removing existing corrosion by use of scraping, brushing, sandblasting or pressure washing the tower to insure that all corrosion is completely removed prior to painting.

Painting consists of first priming the towers with high performance epoxy primer and then finish with high performance urethane, international orange, and IAW manufacturer's recommendations. See attached specifications.

Contractor shall replace all transmission lines on the three (3) existing towers with Andrews LDF5-50 heliax or suitable substitute to the cable junction box located on the inside of the existing RCAG equipment building. Hangers for transmission lines are to be installed and spaced no more than 3' (feet) for the length of the entire run on the tower. Use Andrews LDF5-50A L5 CLICK 3 stack hangers or a suitable substitute. See attachment. Ground the transmission lines to the top and bottom of the transmission lines to the tower with Andrews SGL5-10B2 ground kit or suitable substitute. Contractor shall purchase and install Andrews L5PNF-RPC female connectors and install one (1) on each end of transmission line, two (2) per run.

OBJECTIVES:

Replace existing Northwest tower

Install new ladder and safety rail

Install new transmission line hangers (4 towers)

Install new transmission lines (4 towers)

Install new connectors and ground kits on all transmission lines

Corrosion control and paint on three existing towers

Replace any corroded hardware or structural supports as needed on existing three towers.

References: See attached memos with the requirements for the paint specifications, transmission lines, heliax connectors, grounding kits, hangers, grounding counterpoise, and foundation.

Attachment 2: Fixed ladder and safety system,

Industrial & Marine Coatings

4.53

MACROPOXY® 646 FAST CURE EPOXY

PART A 858-600
PART B 858V600

SERIES HARDENER

PRODUCT INFORMATION

RECOMMENDED SYSTEMS

Immersion and atmospheric:

Steel:
2 cts. Macropoxy 646 @ 5.0 - 10.0 mils dft/ct

Concrete/Masonry, smooth:
2 cts. Macropoxy 646 @ 5.0 - 10.0 mils dft/ct

Concrete Block:
1 ct. Kem Cati-Coat HS Epoxy Filler/Sealer @ 10.0 - 20.0 mils dft, as needed to fill voids and provide a continuous substrate.
2 cts. Macropoxy 646 @ 5.0 - 10.0 mils dft/ct

Atmospheric:
*Steel:
(Shop applied system, new construction, AWWA D102-03, can also be used at 3 mils minimum dft when used as an intermediate coat as part of a multi-coat system)
1 ct. Macropoxy 646 Fast Cure Epoxy @ 3.0 - 6.0 mils dft
1-2 cts. of recommended topcoat

Steel:
1 ct. Recoatable Epoxy Primer @ 4.0 - 6.0 mils dft
2 cts. Macropoxy 646 @ 5.0 - 10.0 mils dft/ct

*Steel:
1 ct. Macropoxy 646 @ 4.0 - 6.0 mils dft
1-2 cts. Acrylon 218 Polyurethane @ 3.0 - 5.0 mils dft/ct
or Hi-Solids Polyurethane @ 3.0 - 5.0 mils dft/ct
or SherThane 2K Urethane @ 3.0 - 4.0 mils dft/ct

Steel:
2 cts. Macropoxy 646 @ 5.0 - 10.0 mils dft/ct
1-2 cts. Tilo-Clad HS Epoxy @ 2.5 - 4.0 mils dft/ct

Steel:
1 ct. Zinc Clad II Plus @ 3.0 - 5.0 mils dft
1 ct. Macropoxy 646 @ 5.0 - 10.0 mils dft
1-2 cts. Acrylon 218 Polyurethane @ 3.0 - 5.0 mils dft/ct

Steel:
1 ct. Zinc Clad III HG @ 3.0 - 5.0 mils dft
or Zinc Clad IV @ 3.0 - 5.0 mils dft
1 ct. Macropoxy 646 @ 5.0 - 10.0 mils dft
1-2 cts. Acrylon 218 Polyurethane @ 3.0 - 5.0 mils dft/ct

Aluminum:
2 cts. Macropoxy 646 @ 5.0 - 10.0 mils dft/ct

Galvanizing:
2 cts. Macropoxy 646 @ 5.0 - 10.0 mils dft/ct

The systems listed above are representative of the product's use. Other systems may be appropriate.

SURFACE PREPARATION

Surface must be clean, dry, and in sound condition. Remove all oil, dust, grease, dirt, loose rust, and other foreign material to ensure good adhesion.
Refer to product Application Bulletin for detailed surface preparation information.
Minimum recommended surface preparation:

Iron & Steel	
Atmospheric:	SSPC-SP2/3
Immersion:	SSPC-SP10/NACE 2, 2-3 mil profile
Aluminum:	SSPC-SP1
Galvanizing:	SSPC-SP1
Concrete & Masonry	
Atmospheric:	SSPC-SP13/NACE 6, or ICRI 03732, CSP 1-3
Immersion:	SSPC-SP13/NACE 6-4.3.1 or 4.3.2, or ICRI 03732, CSP 1-3

TINTING

Tint Part A with 844 Colorants at 180% strength. Five minutes minimum mixing on a mechanical shaker is required for complete mixing of color.

Tinting is not recommended for immersion service.

APPLICATION CONDITIONS

Temperature:	40°F minimum, 140°F maximum. (air, surface, and material) At least 5°F above dew point
Relative humidity:	85% maximum

Refer to product Application Bulletin for detailed application information.

ORDERING INFORMATION

Packaging:	
Part A:	1 and 5 gallon containers
Part B:	1 and 5 gallon containers
Weight per gallon:	12.0 ± 0.2 lb mixed, may vary by color

SAFETY PRECAUTIONS

Refer to the MSDS sheet before use.

Published technical data and instructions are subject to change without notice. Contact your Sherwin-Williams representative for additional technical data and instructions.

DISCLAIMER

The information and recommendations set forth in this Product Data Sheet are based upon tests conducted by or on behalf of The Sherwin-Williams Company. Such information and recommendations set forth herein are subject to change and pertain to the product offered at the time of publication. Consult your Sherwin-Williams representative to obtain the most recent Product Data Information and Application Bulletin.

WARRANTY

The Sherwin-Williams Company warrants our products to be free of manufacturing defects in accord with applicable Sherwin-Williams quality control procedures. Liability for products proven defective, if any, is limited to replacement of the defective product or the refund of the purchase price paid for the defective product as determined by Sherwin-Williams. NO OTHER WARRANTY OR GUARANTEE OF ANY KIND IS MADE BY SHERWIN-WILLIAMS, EXPRESSED OR IMPLIED, STATUTORY, BY OPERATION OF LAW OR OTHERWISE, INCLUDING MERCHANTABILITY AND FITNESS FOR A PARTICULAR PURPOSE.

ATTACHMENT 1

Industrial & Marine Coatings

5.05
COROTHANE® I ALIPHATIC FINISH COAT

B65-10 Series

PRODUCT INFORMATION

Revised 11/05

Product Description

COROTHANE I ALIPHATIC FINISH COAT is a single component, VOC compliant, moisture curing urethane designed for low temperature or high humidity applications while providing UV resistance and chemical resistance equivalent to two part urethane coatings.

- Low temperature application - down to 20°F
- Excellent resistance to yellowing, chalking, or degradation by sunlight
- Excellent adhesion to most surfaces
- Superior abrasion resistance
- Excellent adhesion directly to clean concrete
- Outstanding chemical resistance

Recommended Uses

- Color coat for where maximum color and gloss retention are required
- Chemical resistant coating for metallized surfaces and tanks
- Chemical resistant floor coating
- Marine applications
- Suitable for use in USDA inspected facilities
- Conforms to AWWA D102-03 OCS #2

Product Characteristics

Finish:	Gloss
Color:	Wide range of colors available
Volume Solids:	52% ± 2%, may vary by color
VOC (calculated):	<420 g/L, 3.5 lb/gal

Recommended Spreading Rate per coat:

Wet mils:	4.0 - 6.0
Dry mils:	2.0 - 3.0
Coverage:	278 - 417 sq ft/gal approximate

Drying Schedule @ 4.0 mils wet @ 50% RH:

	@40°F	@ 77°F	@100°F
To touch:	4 hours	1 hour	40 minutes
To recoat			
minimum:	18 hours	4 hours	4 hours
maximum	30 days	14 days	14 days
To cure:	8 days	3 days	3 days

Drying times temperature, humidity, and film thickness dependent.

Shelf Life:	12 months, unopened Store indoors at 40°F to 100°F. (Tinted colors must be used within 7 days after tinting)
Flash Point:	>93°F, PMCC
Reducer/Clean Up:	Reducer 115, R7K15 Reducer 100, R7K100

Performance Characteristics

System Tested: (unless otherwise indicated)
Substrate: Steel
Surface Preparation: SSPC-SP6
1 ct. Corothane I GalvaPac Zinc Primer @ 3.0 mils dft
1 ct. Corothane I Aliphatic @ 2.0 mils dft

Abrasion Resistance:
Method: ASTM D4060, CS17 wheel, 1000 cycles, 1 kg load
Result: 24 mg loss

Adhesion:
Method: ASTM D4541
Result: 945 psi

Corrosion Weathering: (Zinc Primer/Mastic/Aliphatic Finish)
Method: ASTM D5894, 3024 hours, 9 cycles
Result: Rating 10 per ASTM D714 for blistering
Rating 9 per ASTM D610 for rusting

Direct Impact Resistance:
Method: ASTM D2794
Result: 160 in. lbs.

Dry Heat Resistance:
Method: ASTM D2485
Result: 280°F

Flexibility:
Method: ASTM D522, 180° bend, 1/8" mandrel
Result: Passes

Moisture Condensation Resistance:
Method: ASTM D4585, 100°F, 1000 hours
Result: Passes

Pencil Hardness:
Method: ASTM D3363
Result: 2H

Salt Fog Resistance: (Zinc Primer/Mastic/Aliphatic Finish)
Method: ASTM B117, 3000 hours
Result: Rating 10 per ASTM D714 for blistering
Rating 9 per ASTM D610 for rusting

Wet Heat Resistance:
Method: Non-immersion
Result: 160°F

Meets requirements of SSPC Paint 36, Level II.

continued on back

7/8" Foam Dielectric, LDF Series – *50-ohm*

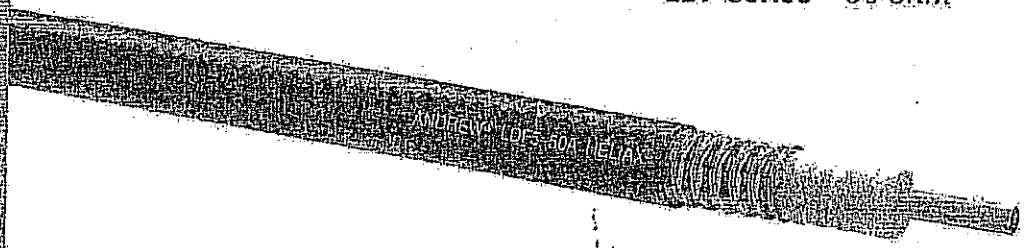

LDF5-50A

Description	Type No.

Cable Ordering Information

Standard Cable	
7/8" Standard Cable, Standard Jacket	LDF5-50A
Fire Retardant Cable	
7/8" Fire Retardant Jacket (CATVR)	LDF5RN-50A
Low VSWR and Specialized Cables	
7/8" Low VSWR, specify operating band	LDF5P-50A-(**)

** Insert suffix number from "Low VSWR Specifications" table, page 508.

Characteristics

Electrical	
Impedance, ohms	50 ± 1
Maximum Frequency, GHz	5.0
Velocity, percent	89
Peak Power Rating, kW	91
dc Resistance, ohms/1000 ft (1000 m)	
Inner	0.32 (1.05)
Outer	0.36 (1.18)
dc Breakdown, volts	6000
Jacket Spark, volts RMS*	8000
Capacitance, pF/ft (m)	22.8 (75.0)
Inductance, µH/ft (m)	0.057 (0.187)
Mechanical	
Outer Conductor	Copper
Inner Conductor	Copper
Diameter over Jacket, in (mm)	1.09 (28)
Diameter over Copper Outer Conductor, in (mm)	0.98 (24.9)
Diameter Inner Conductor, in (mm)	0.355 (9.0)
Nominal Inside Transverse Dimensions, cm	2.11
Minimum Bending Radius, in (mm)	10 (250)
Number of Bends, minimum (typical)	15 (50)
Bending Moment, lb-ft (N•m)	12 (16.3)
Cable Weight, lb/ft (kg/m)	0.33 (0.49)
Tensile Strength, lb (kg)	325 (147)
Flat Plate Crush Strength, lb/in (kg/mm)	80 (1.4)

*A 75-ohm 7/8" diameter cable is available. Contact Andrew for further information.

Attenuation and Average Power

Frequency MHz	Attenuation dB/100 ft	Attenuation dB/100 m	Average Power, kW
0.5	0.025	0.081	91.0
1	0.035	0.115	78.8
1.5	0.043	0.141	64.1
2	0.050	0.163	56.5
10	0.112	0.366	24.6
20	0.159	0.521	17.3
30	0.195	0.641	14.1
50	0.254	0.833	10.8
88	0.340	1.12	8.08
100	0.364	1.19	7.56
108	0.378	1.24	7.26
150	0.449	1.47	6.12
174	0.486	1.59	5.66
200	0.523	1.72	5.28
300	0.649	2.13	4.24
400	0.758	2.49	3.63
450	0.808	2.65	3.41
500	0.855	2.81	3.22
512	0.866	2.84	3.17
600	0.945	3.10	2.91
700	1.03	3.37	2.67
800	1.11	3.63	2.46
824	1.13	3.69	2.44
894	1.19	3.87	2.34
960	1.23	4.02	2.24
1000	1.26	4.12	2.19
1250	1.42	4.67	1.93
1500	1.58	5.18	1.74
1700	1.70	5.56	1.62
1800	1.75	5.75	1.57
2000	1.86	6.11	1.48
2100	1.92	6.29	1.44
2200	1.97	6.46	1.40
2900	2.02	6.63	1.36
3000	2.37	7.76	1.16
3400	2.55	8.37	1.08
4000	2.81	9.23	0.978
5000	3.23	10.6	0.853

Standard Conditions:
For Attenuation, VSWR 1.0, ambient temperature 20°C (68°F).
For Average Power, VSWR 1.0, ambient temperature 40°C (104°F), inner conductor temperature 100°C (212°F); no solar loading.

Install Cable with One Easy "Click"

Click-on Hangers* are specifically designed to support HELIAX® coaxial cable. They are stackable, install in just minutes, and provide a perfect fit that gives your PCS/PCN, cellular, microwave, rural telephony, GSM, or other telecommunications system a professional appearance, especially in confined spaces. The hangers are made of tough, UV-resistant material and set the standard for durability, simplicity of installation, and cost-effectiveness. Only two wrenches are required for installation. Refer to table on page 598 for maximum spacing.

*Patented United States No. 5794897

Click-On Hangers Ordering Information – Kits of 10

Cable Size	Cable Type	Hanger Type Number
1/2"	LDF4-50A	L4CLICK
5/8"	LDF4.5-50A	L45CLICK
7/8"	LDF5-50A	L5CLICK
1-1/4"	LDF6-50	L6CLICK
1-5/8"	LDF7-50A	L7CLICK

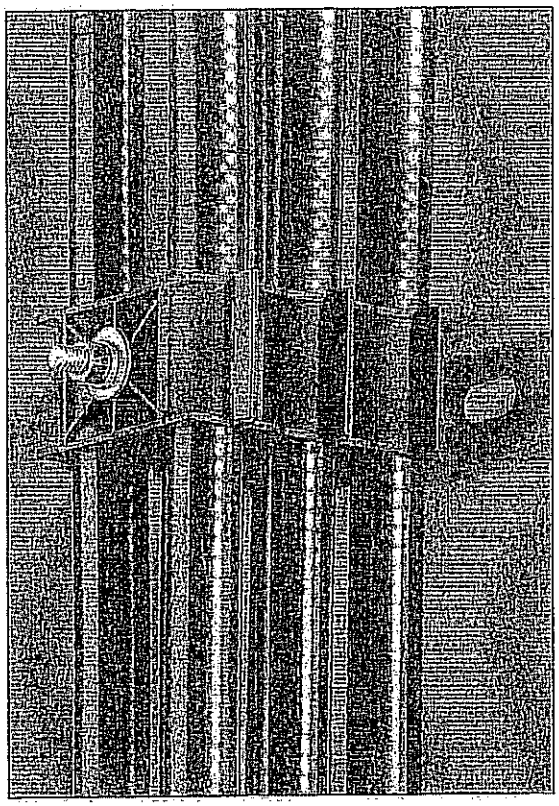

Click-On Hanger Hardware Kits

Click-On hanger attachment hardware is available in 3/8" or M10 sizes. Constructed of stainless steel for durability. Select hardware length according to planned hanger stack height.

Hardware Kit Ordering Information

Cable Size	Stack Height (Hangers)	Type Number M10 Kit	Type Number 3/8" Kit
1/2", 5/8" or 7/8" Cable			
	1	243095-11	243095-9
	2	243095-7	243095-5
	3	243095-3	243095-1
1-1/4" or 1-5/8" Cable			
	1	243095-12	243095-10
	2	243095-8	243095-6
	3	243095-4	243095-2

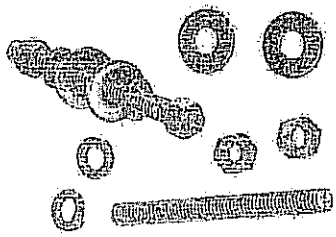

Tower and Pole Adapters

The round pole adapter attaches Click-On hangers to round member diameters 7-1/2 to 10 in (190-250 mm). Attachment hardware is sold separately. For wood poles, use lag screws. For metal poles, use Wraplock.

Adapter Ordering Information

Description	Type No.
Round Member Adapter, universal, kit of 10	244336
Compact Angle Adapter, kit of 10	
3/8" Hardware	243684
M10 Hardware	243684-M
Ceiling Adapter	244350
Stainless Steel Wraplock, 100 ft (305 m)	12395-1

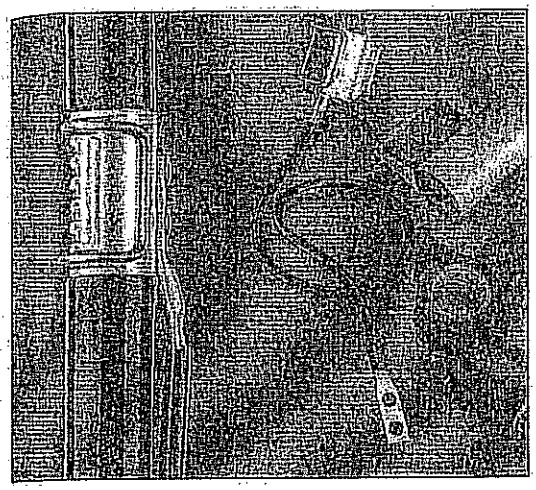

SureGround™ Grounding Kits

Cable Type	Factory Attached One-Hole Lug Type No.	Factory Attached Two-Hole Lug Type No.	Field-Attachable Crimp-On One-Hole Lug Type No.	Field-Attachable Crimp-On Two-Hole Lug Type No.
600 mm (24 in) Grounding Wire				
LDF4	SGL4-06B1	SGL4-06B2	–	–
LDF45	SGL45-06B1	SGL45-06B2	–	–
LDF5	SGL5-06B1	SGL5-06B2	–	–
LDF6	SGL6-06B1	SGL6-06B2	–	–
LDF7	SGL7-06B1	SGL7-06B2	–	–
LDF12	SGL12-06B1	SGL12-06B2	–	–
1000 mm (39 in) Grounding Wire				
LDF4	SGL4-10B1	SGL4-10B2	–	–
LDF45	SGL45-10B1	SGL45-10B2	–	–
LDF5	SGL5-10B1	SGL5-10B2	–	–
LDF6	SGL6-10B1	SGL6-10B2	–	–
LDF7	SGL7-10B1	SGL7-10B2	–	–
LDF12	SGL12-10B1	SGL12-10B2	–	–
1500 mm (59 in) Grounding Wire				
LDF4	–	–	SGL4-15B3	SGL4-15B4
LDF4	–	–	SGL45-15B3	SGL45-15B4
LDF5	–	–	SGL5-15B3	SGL5-15B4
LDF6	–	–	SGL6-15B3	SGL6-15B4
LDF7	–	–	SGL5-15B3	SGL5-15B4
LDF12	–	–	SGL12-15B3	SGL12-15B4

7-16 DIN Female
L5PDF-RPC

7-16 DIN Male
L5PDM-RPC

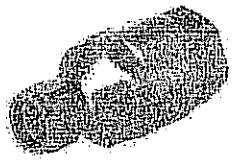

L5PNM-RPC

N Female
L5PNF-RPC

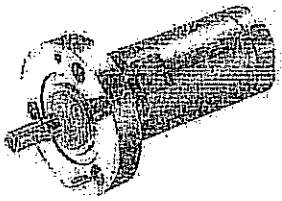

7/8" EIA Flange
L45R

F Flange Male
L45F

Connectors

Interface	Description	Type Number	Inner Contact Attachment	Outer Contact Attachment	Plating Code	Max. Length In (mm)	Max. Dia. In (mm)
N Male	OnePiece	L5PNM-RPC	Captivated	Self-Flare	SG	2.9 (74)	1.46 (37.2)
N Male	RingFlare	L5PNM-RC	Captivated	Self-Flare	SG	3.0 (76)	1.35 (34.3)
N Female	OnePiece	L5PNF-RPC	Captivated	Self-Flare	SG	2.7 (69)	1.46 (37.2)
N Female	RingFlare	L5PNF-RC	Captivated	Self-Flare	SG	2.9 (74)	1.35 (34.3)
7-16 DIN Male	OnePiece	L5PDM-RPC	Captivated	Self-Flare	SS	2.7 (69)	1.46 (37.2)
7-16 DIN Male	RingFlare	L5PDM-RC	Captivated	Self-Flare	SS	3.1 (79)	1.34 (34.0)
7-16 DIN Female	OnePiece	L5PDF-RPC	Captivated	Self-Flare	SS	2.33 (59.1)	1.46 (37.2)
7-16 DIN Female	RingFlare	L5PDF-RC	Captivated	RingFlare	SS	2.9 (74)	1.36 (34.5)
7-16 DIN Female	Panel Mount	L5PDF-PM	Self-Tapping	Self-Flare	SS	2.7 (69)	1.35 (34.4)
7-16 DIN Female	Bulkhead	L5PDF-BH	Self-Tapping	Self-Flare	SS	2.7 (69)	1.9 (48.3)
7-16 DIN Male	Right Angle	L5PDR	Self-Tapping	Self-Flare	SS	3.3/2.5 (85/64)	1.4 (35.6)
7/8" EIA Flange	–	L45R	Self-Tapping	Self-Flare	BB	3.3 (84)	2.25 (57)
7/8" EIA Flange	Right Angle	124800-1	Self-Tapping	Self-Flare	BB	3.9/1.3 (99/33)	2.25 (57)
F Flange Male	–	L45F	Self-Tapping	Self-Flare	BB	1.8 (46)	2.25 (57)
F Flange Female	–	48041	Self-Tapping	Self-Flare	BB	1.8 (46)	2.25 (57)
Splice	–	L45Z	Self-Tapping	Self-Flare	BB	3.3 (84)	1.5 (38)

Plating Codes: BB - Brass Body and Pin, BS - Brass Body and Silver Plated Pin, SG - Silver Plated Body and Gold Plated Pin, SS - Silver Plated Body and Pin

Connector Accessories – See page 624

Factory Attached Connectors – For factory made cable assemblies and jumper cables, see pages 584-587.

Click-On Hangers and Adapters

Flat Member Attachment

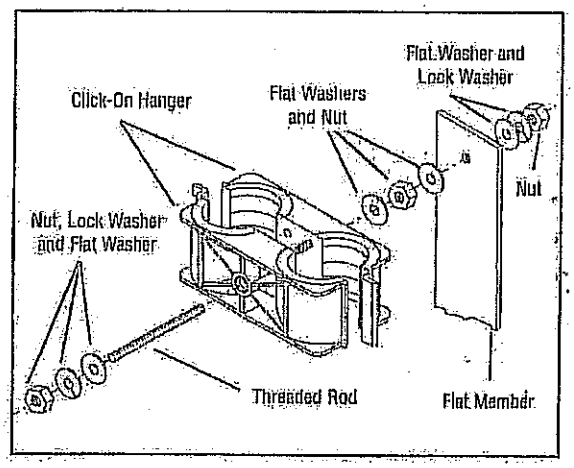

Angle Adapter Attachment

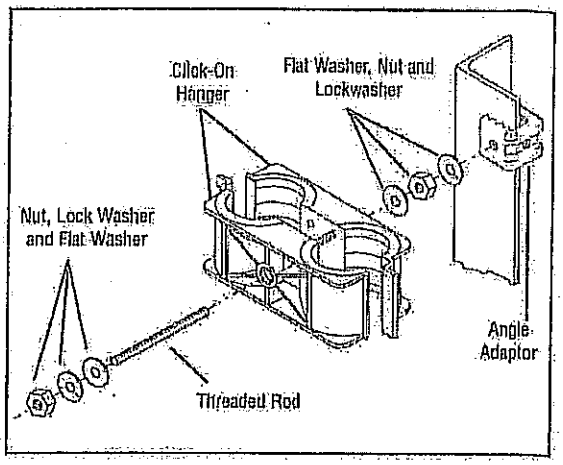

Round Adapter Attachment

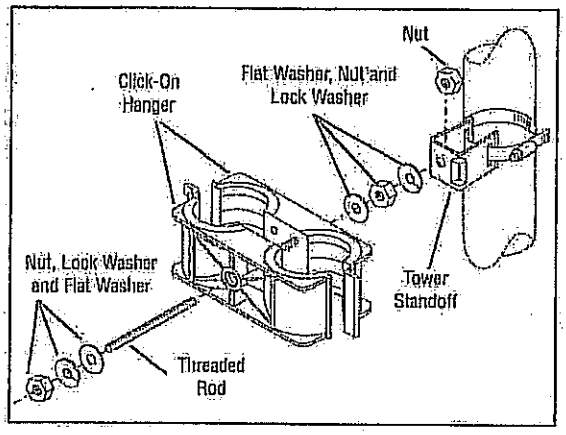

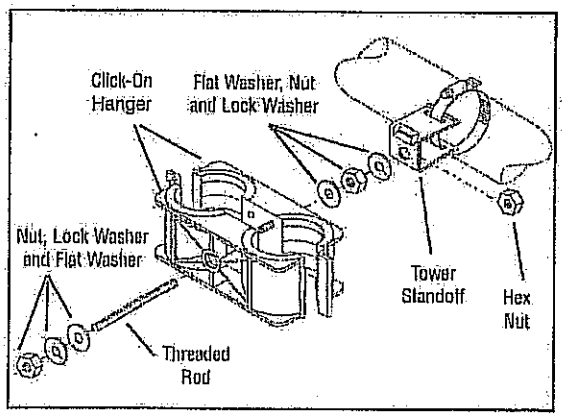

Ceiling Adapter Attachment

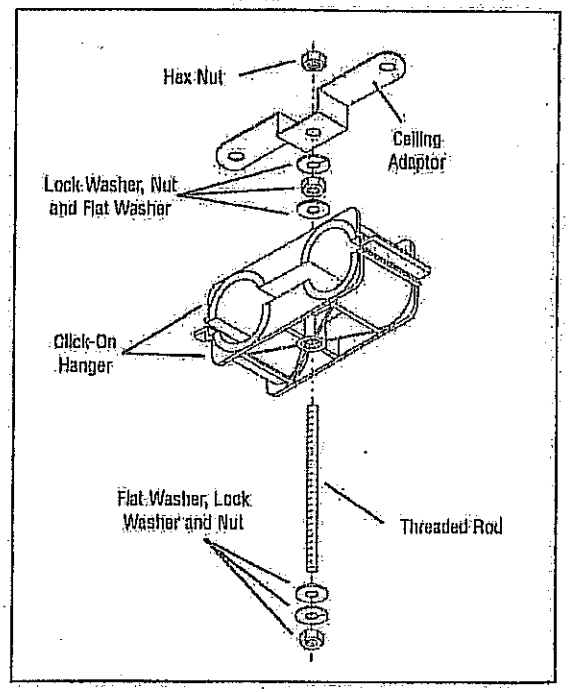

SRQ RCAG
Requirements for Fixed Ladder and Ladder Safety System

These requirements are based on a ladder that is 55 feet tall and accesses an outer edge of the RCAG platform.

The ladder shall comply with OSHA Standard 29 CFR 1910.27, Fixed Ladders, and ANSI A14.3, Safety Requirements for Fixed Ladders. Following are some, but not all, of these requirements:

- Because of the tower's location in a humid climate, the ladder rungs shall have a minimum diameter of 1 inch. The ladder and ladder safety system shall be treated to resist corrosion.
- The distance between rungs shall be a maximum of 12 inches. The spacing of the rungs shall be uniform the entire length of the ladder.
- The minimum width of the rungs shall be 16 inches.
- The ladder and ladder safety system shall extend 3.5 feet above the platform floor.
- There shall be a minimum clearance of 7 inches at the rear of the ladder.
- The step-across distance from the ladder to the platform shall be a maximum of 12 inches.

In accordance with Eastern Service Area policy, the ladder safety system shall be of the rigid rail type; a cable rail is prohibited.

Ladder and safety rail shall be made of galvanized steel.

A pivot davit assembly is recommended for the top of the ladder safety system to improve the climber's safety when transitioning from the ladder to the platform.

Other Fall Protection Requirements:
The platform must be enclosed by a guardrail on all sides. The guardrail shall comply with OSHA Standard 29 CFR 1910.23.

- The ladder opening shall be protected by a self-closing safety gate.

Tower Specifications

Concrete shall have 3,000-psi compressive strength at 28 days.

All reinforcing steel bars shall have a 3" minimum concrete cover and shall conform to ASTM 615 Grade.

Base of excavation shall be clean and free of debris and loose dirt.

Young Manufacturing, Montrose CO manufactures a 50' tower and includes anchor bolts erection bolts, safety rails and aluminum pipe antenna mounts.

Contractor shall assemble the tower in accordance with the manufacturer's instructions. Placement of PVC conduit in the foundation shall be clear of all members.

Contractor shall install channel supports and PVC conduits on the inside face of the tower.

All exposed edges shall have a bevel of 1" and horizontal concrete shall have a broom finish.

Rebar takeoff

	Size	Length	Spacing	N-S	E-W	Total
Top Mat	# 6	11'-6"	12.5"	12	12	24
Bottom Mat	# 6	11'-6"	12.5"	12	12	24
Mid Perimeter	# 6	11'-6"		2	2	4
					Total	52

	Size	Length	Spacing	Corners	Per Side	Total
Vertical Perimeter	# 6	4'-6"	23"	4	5	24
Vertical Center	# 6	4'-6"				As needed

Concrete needed for pour - Approx 5' x 12' x 12' / 27 = 26.67

Note: the tower foundation is designed so it can sit on top of the ground and not blow over so the height of the foundation above ground can be adjusted, if necessary. Usually installed 6" above grade.

The center of the bolt pattern is spaced 6'-6"apart. The contractor will need to move the 4" conduit in so the unistrut will clear the tower steel on the inside of the columns. The 3/4" is for 4/0 ground and should be near two opposite legs. (Contractor will need to account for the base plate when doing the layout.)

The site has been using Stahlin Junction boxes at the top and bottom of the towers for Andrew suregrounds on the cable. The best size is 36 x 24 x 12 for 7/8" cable and 30 x 20 x 10 for 1/2"

When installing the cable up the tower ensure that slack is allowed at the top to permit for settling. When cutting cable off in the top box, secure with cush-a-clamps so the cable doesn't slide down the conduit. Always do the top box first before cutting off the slack at the bottom.

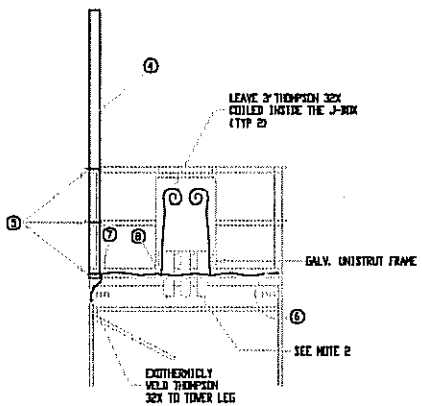

2 / E06 JUNCTION BOX ELEVATION

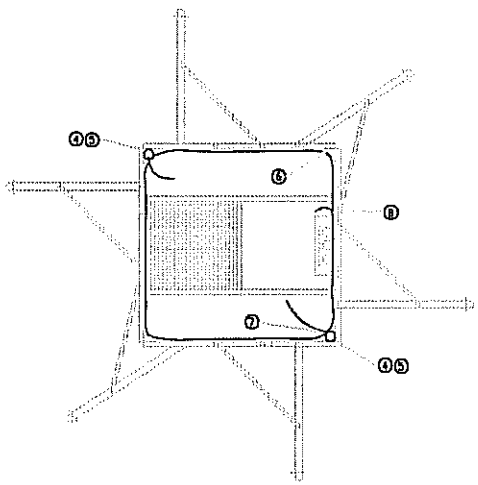

4 / E06 JUNCTION BOX SECTION

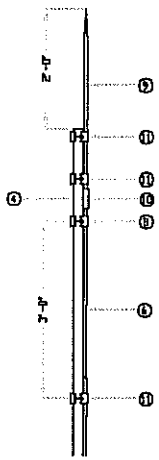

5 / E06 AIR TERMINAL ASSEMBLY

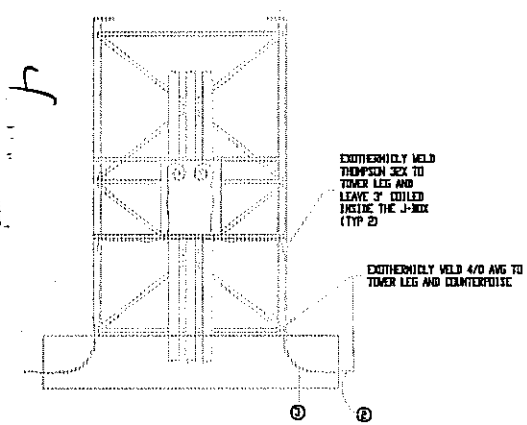

3 / E06 TOWER CONDUIT ELEVATION

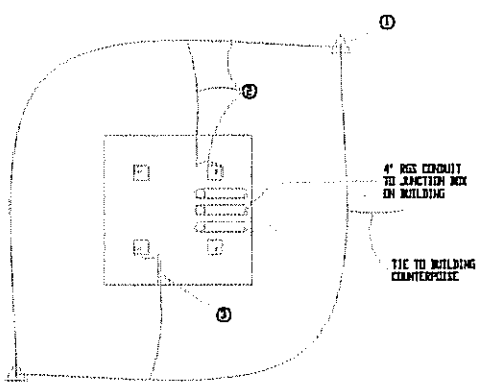

1 / E06 TOWER CONDUIT SECTION

NOTES

1. SUPPORT THE CONDUCTOR AT A MINIMUM OF 2'-0" SPACING AROUND THE PERIMETER OF THE PLATFORM
2. INSTALL DOWN CONDUCTOR WITH AN MINIMUM OF BENDS
3. ALL GROUNDING CONNECTIONS BELOW GRADE SHALL BE BY EXOTHERMIC WELD

1. GROUND ROD, COPPER CLAD 3/4" DIA X 10'
2. 4/0 AWG BARE COPPER, 20 STRANDS, WT. 660 LBS. / 1000 FT
3. CONDUIT, RIGID PLASTIC 3/4"
4. STANDARD STEEL PIPE, GALV. 2" X 21 FEET LONG
5. U-BOLT, 2" WITH SELF LOCKING NUTS
6. DOWN CONDUCTOR, 32 STRANDS, WT. 215 LBS / 1000', THOMPSON 32X OR EQUAL. SUPPORT CABLE EVERY 3 FT.
7. X SPLICE, THOMPSON #706 OR EQUAL
8. T SPLICE - THOMPSON #706 OR EQUAL
9. AIR TERMINAL, 5/8" X 3", THOMPSON #667 OR EQUAL
10. VERTICAL CONNECTOR, THOMPSON # 650 OR EQUAL
11. PIPE CLAMP, THOMPSON #240X OR EQUAL
12. CABLE CLAMP, THOMPSON #142 OR EQUAL

MARK	DATE	DESCRIPTION	DRAWN	APPROVED

DEPARTMENT OF TRANSPORTATION
FEDERAL AVIATION ADMINISTRATION
SOUTHERN REGION — ATLANTA, GEORGIA 30320

PROJECT
ESTABLISH RCF
FREESTANDING TOWER
LIGHTNING PROTECTION SECTIONS AND DETAILS

STANDARD — FAA

AIRWAY FACILITIES DIVISION

ATTACHMENT 4

PAGE NO. 1 OF 2

SCALE OF BORDER: ADD SCALE

NOTES

1. CONCRETE SHALL HAVE 3000 PSI COMPRESSIVE STRENGTH AT 28 DAYS.
2. ALL REINFORCING STEEL BARS SHALL HAVE A 3" MINIMUM CONCRETE COVER AND SHALL CONFORM TO THE ASTM A615 GRADE.
3. BASE OF EXCAVATION SHALL BE CLEAN AND FREE OF DEBRIS AND LOOSE DIRT.
4. THE 50 FT GFM FREESTANDING TOWER IS FABRICATED BY YOUNG MANUFACTURING AND INCLUDES ANCHOR BOLTS, ERECTION BOLTS, SAFETY RAILS, AND 6' LENGTH ALUMINUM PIPE MOUNTS.
5. CONTRACTOR SHALL ASSEMBLE AND ERECT THE TOWER WITH SAFETY RAIL AND ANTENNA MOUNTS IN ACCORDING TO THE MANUFACTURE'S REQUIREMENTS. PLACEMENT OF PVC CONDUITS IN CONCRETE FOUNDATION SHALL BE CLEARED OF THE MEMBERS.
6. CONTRACTOR SHALL INSTALL CHANNEL SUPPORTS AND PVC CONDUITS ON THE INSIDE FACE OF THE TOWER.
7. ALL EXPOSED CONCRETE EDGES SHALL HAVE BEVEL OF 1" MINIMUM AND BROOM FINISH FOR HORIZONTAL SURFACE.

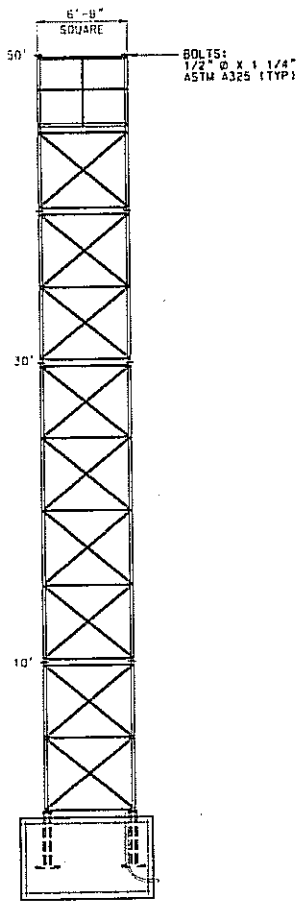

1 / S01 TOWER 50 FEET
NOT TO SCALE

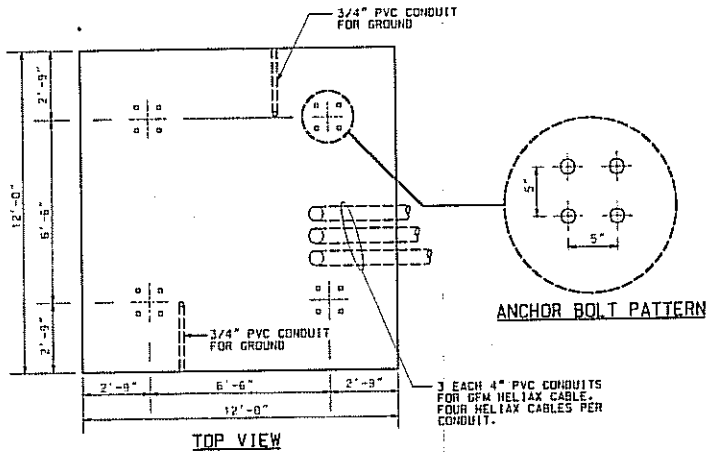

2 / S01 ANCHOR BOLT PATTERN
NOT TO SCALE

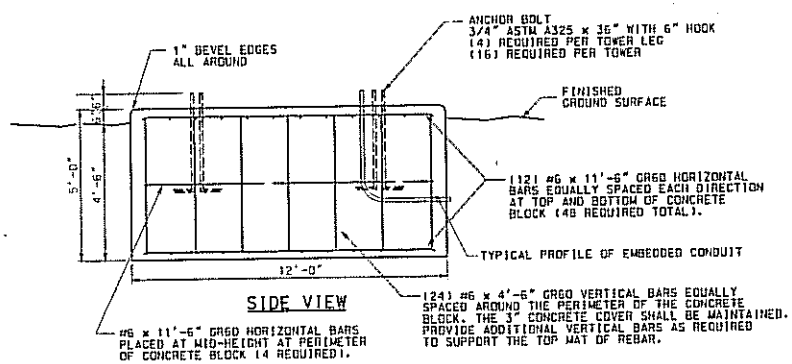

3 / S01 ANCHOR BOLT PATTERN
NOT TO SCALE

REVISN	DATE	DESCRIPTION	DRAWN	APPROVED
A	10/13/2025	95 DGN'S	DE	AA

DEPARTMENT OF TRANSPORTATION
FEDERAL AVIATION ADMINISTRATION
SOUTHERN REGION — ATLANTA, GEORGIA 30320

BUEC
50 FT FREESTANDING YOUNG TOWER
MAT FOUNDATION SECTIONS AND DETAILS

TAMIAMI (OMB) FL

REVIEWED BY
SUBMITTED BY (ORIGINAL SIGNED BY): ROBERTO ESTRADA — CIVIL ENGINEER, CONCRETE PLATFORM
APPROVED BY (ORIGINAL SIGNED BY): ANGEL A. ARROYO — MANAGER, PLATFORM OPERATIONS, CONCRETE

REVIEWED BY: S. [illegible]
REVIEWED BY: [illegible]
CHECKED BY:

ISSUED BY: ATLANTA NAS IMPLEMENTATION CENTER

DATE: 04-05-2025
DRAWING NO.: SD-D-103525-S01
REV: A

SUPERSEDES 01-29-2025 - 01129025

SRQ RCAG

SE Tower

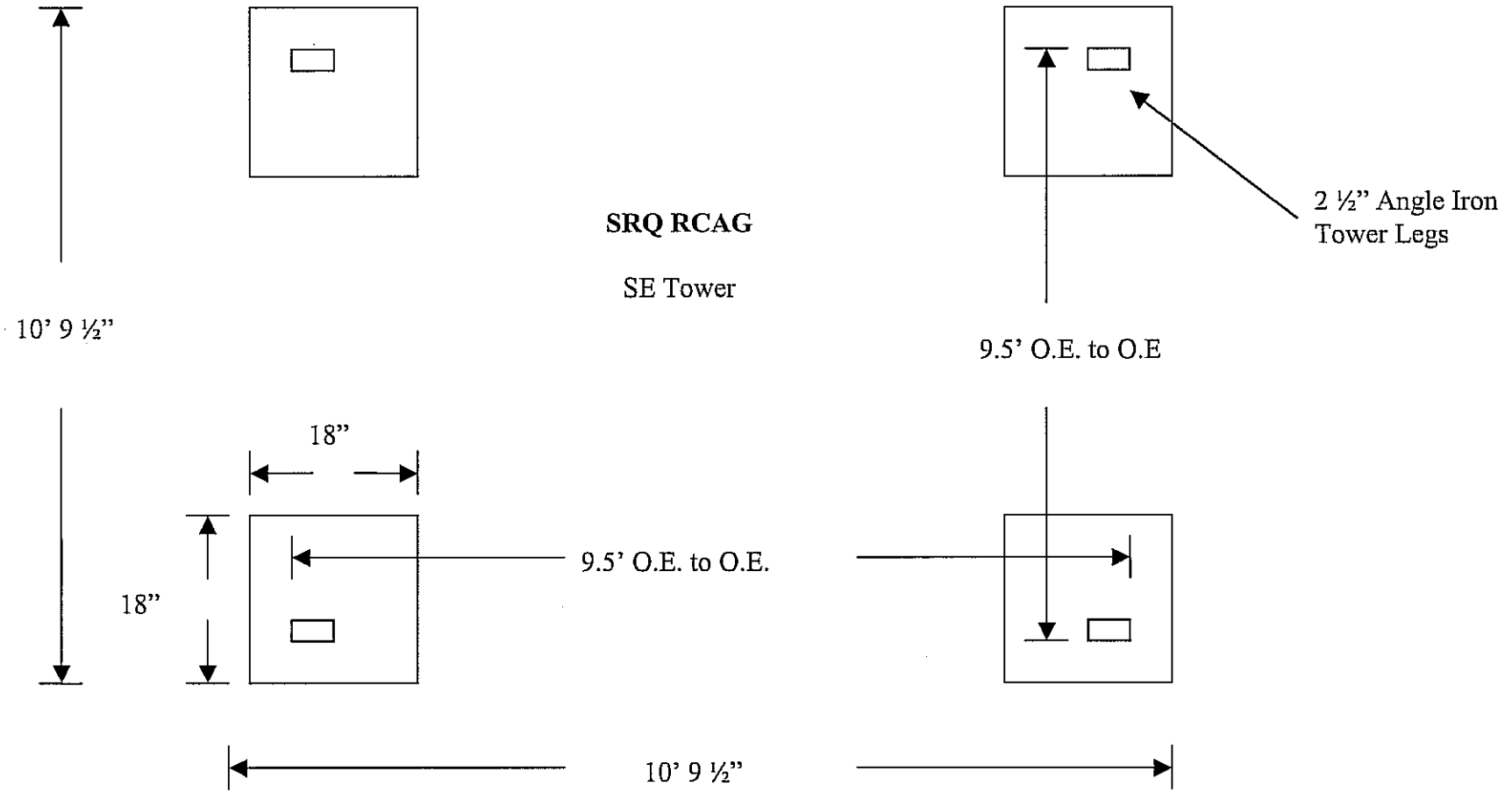

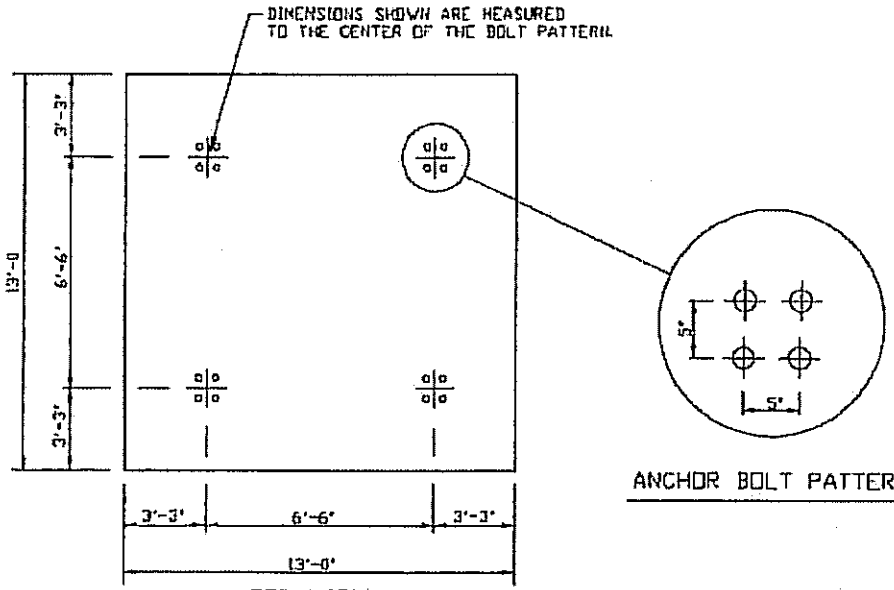

TOP VIEW

ANCHOR BOLT PATTERN

NOTES:

1. CONCRETE SHALL OBTAIN 3000 PSI COMPRESSIVE STRENGTH AT 28 DAYS.
2. ANCHOR BOLTS SHALL BE 3/4"ϕ ASTM A325.
3. ALL REBAR SHALL HAVE 3" MINIMUM CONCRETE COVER AND SHALL CONFORM TO THE ASTM A615 GRADE SHOWN.
4. THIS FOUNDATION REQUIRES A MINIMUM ALLOWABLE GROSS BEARING OF 2000PSF.
5. BASE OF EXCAVATION SHALL BE CLEAN OF ALL DEBRIS AND LOOSE SOIL.
6. 31.3 C.Y. OF CONCRETE REQUIRED FOR THIS FOUNDATION.

BASE REACTIONS:

MOMENT = 461.0 K-FT
SHEAR = 14.3 KIPS
AXIAL = 5.4 KIPS

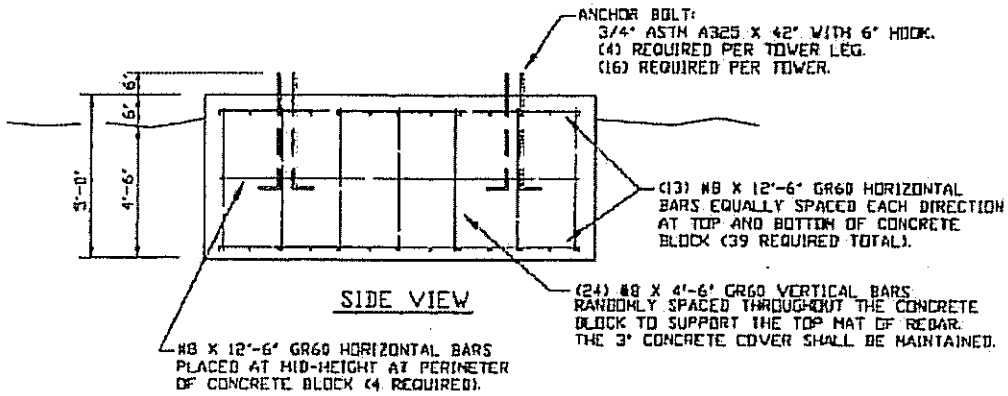

SIDE VIEW

NO SCALE

YOUNG'S MANUFACTURING #1 LOWER AIRPORT TRAIL MONTROSE, CO 81401	
TOWERCRAFT PROJECT NO 2959	
TITLE: FOUNDATION - 50' TOWER	
TOWERCRAFT ENGINEERING 223 NIOBRARA STREET ALLIANCE, NE 69301 (308) 762-3002	BY: AAK DATE: 9-24-04
DWG NO. 2959A-F	PAGE 1 OF 1

SITE:	MEMPHIS, TN
HEIGHT:	50'
EIA STANDARD:	222-C
WIND:	150MPH (90PSF)
ICE:	NONE
REVISION:	

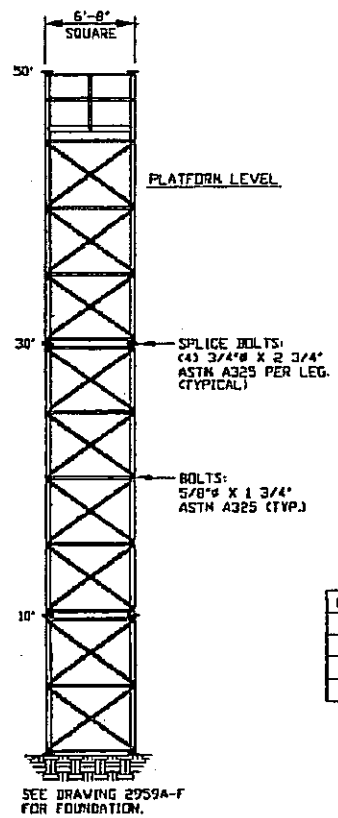

SEE DRAWING 2959A-F
FOR FOUNDATION.

LOADS

ELEV.	ITEM	LINE
TOP	PLATFORM	
TOP	(6) UHF/VHF	(7) 7/8
TOP	JUNCTION BOX	

TOWER IS DESIGNED FOR AN INSIDE CLIMBING LADDER

NOTES

1. DESIGN MEETS THE REQUIREMENTS OF EIA DESIGN STANDARD LISTED ABOVE.
2. TOWER DESIGN IS BOLT TOGETHER CONSTRUCTION CONSISTING OF ALL ANGLE MEMBERS.
3. LEG MATERIAL SHALL BE MINIMUM 50 KSI YIELD. DIAGONAL, HORIZONTAL AND PLATE MATERIAL SHALL BE MINIMUM OF 36 KSI YIELD.
4. ALL STEEL SHALL BE HOT DIPPED GALVANIZED PER ASTM A 123.
5. ALL HARDWARE SHALL BE HOT DIPPED GALVANIZED PER ASTM A153.
6. ALL CONNECTIONS SHALL BE DESIGNED TO HOLD THE CAPACITY OF THE CONNECTING MEMBERS.
7. ALL CONNECTIONS (WELDED AND BOLTED) SHALL CONFORM TO AISC 'MANUAL OF STEEL CONSTRUCTION' LATEST EDITION.
8. IF ANY ITEM OF THE COMPLETED STUCTURE VARIES FROM WHAT IS SHOWN ON THIS DRAWING THE CERTIFICATION BY TOWERKRAFT ENGINEERING SHALL BE CONSIDERED INVALID.

ELEVATION	LEG (50KSI)	DIAGONAL (36KSI)	HORIZONTAL (36KSI)
30'-50'	3 1/2 X 3 1/2 X 1/4	2 X 2 X 3/16	2 X 2 X 1/8
10'-30'	3 1/2 X 3 1/2 X 3/8	2 X 2 X 1/4	2 X 2 X 1/8
0'-10'	5 X 5 X 3/8	2 X 2 X 1/4	2 X 2 X 1/8

YOUNG'S MANUFACTURING
#1 LOWER AIRPORT TRAIL
MONTROSE, CO 81401

TOWERKRAFT PROJECT NO.	2959
TITLE:	TOWER DATA SHEET
TOWERKRAFT ENGINEERING 223 MIDDLEMAN STREET ALLIANCE, NE 69301 (308) 762-5002	BY: AAK
	DATE: 9-24-04
DWG. NO. 2959A-DS	PAGE 1 OF 1

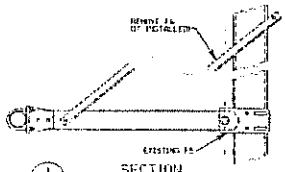

1 / 205 SECTION

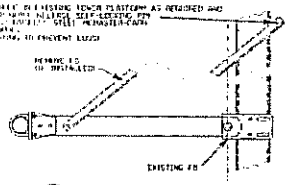

2 / 205 SECTION

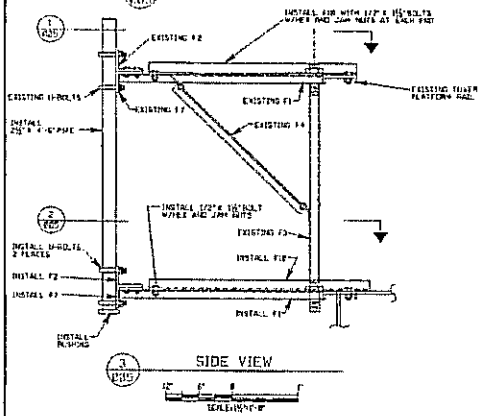

3 / 205 SIDE VIEW

SCALE: 3/4"=1'-0"

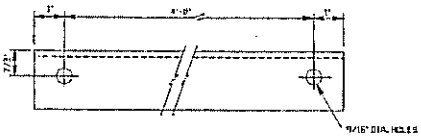

4 / 205 F-1B

1 1/2" x 1 1/2" x 1/8" x 4'-2"

NOT TO SCALE

NOTES

1. FOR FABRICATION DETAILS OF F1,F2,F3 AND OTHER EXISTING MEMBERS, SEE DWG. D-5250.
2. F1,F2,F3 AND F1B TO BE FABRICATED FROM ASTM A-36 STEEL AND GALVANIZED AFTER FABRICATION.
3. ALL NUTS AND BOLTS TO BE GALVANIZED OR STAINLESS STEEL. ALL BOLTS TO HAVE LOCK WASHER OR JAM NUT.
4. THIS MODIFICATION IS INTENDED TO STRENGTHEN THOSE ANTENNA SUPPORT BRACKETS ON WHICH TACO ANTENNA MODELS D-2260, D-2272, D-2273, AND D-2274 OR SIMILARLY SIZED ANTENNAS ARE INSTALLED. IT IS NOT NECESSARY ON SUPPORTS WHERE SMALLER ANTENNAS ARE INSTALLED.
5. HOLE SPACING AND BRACKET LENGTH SHOWN IS BASED ON EXISTING STANDARD ANTENNA SUPPORT BRACKETS ON WHICH TACO ANTENNA DRAWINGS D-5250 AND D-5251 WHICH ARE USED WITH SELF SUPPORTING CRS TOWER PLATFORMS (DWG. D-5231) AND GUYED TYPE AS MODEL-2 TOWER PLATFORMS (DWG. D-5241-D,E) AS WELL AS SIMILAR BRACKETS ON ANTENNA TOWERS PURCHASED FROM LOCAL COMMUNICATIONS INC. OF ARKANSAS AS PART OF CONTRACT DOT-FA75A-3795.
6. PERSONAL INJURY CONSIDERATIONS DETAILED IN FIELD CHECKED WHERE FEASIBLE PRIOR TO FABRICATION OF MEMBER F1B.
7. MEMBER F1,F2,F3 TO BE DISMANTLED FROM UNUSED ANTENNA SUPPORTS.
8. PIPE IS TO BE GALVANIZED STEEL.

REVN	BY	REMARKS	DATE	APPD

DEPARTMENT OF TRANSPORTATION
FEDERAL AVIATION ADMINISTRATION
SOUTHERN REGION — ATLANTA, GEORGIA 30320

RCAC
ANTENNA SUPPORT BRACKET
OF TOWERS
MODIFICATIONS FOR TACO ANTENNAS
FABRICATION AND INSTALLATION DETAILS

SARASOTA — SARASOTA-BRADENTON AIRPORT — FLA.

SUBMITTED BY: M. J. Mahoney 9/11/77
APPROVED BY: Patrick T. McKeon
DESIGNED BY / DRAWN BY / CHECKED BY
ISSUED BY: AIRWAY FACILITIES DIVISION
DATE: JANUARY 1977
DRAWING NO. DEPSFEC205

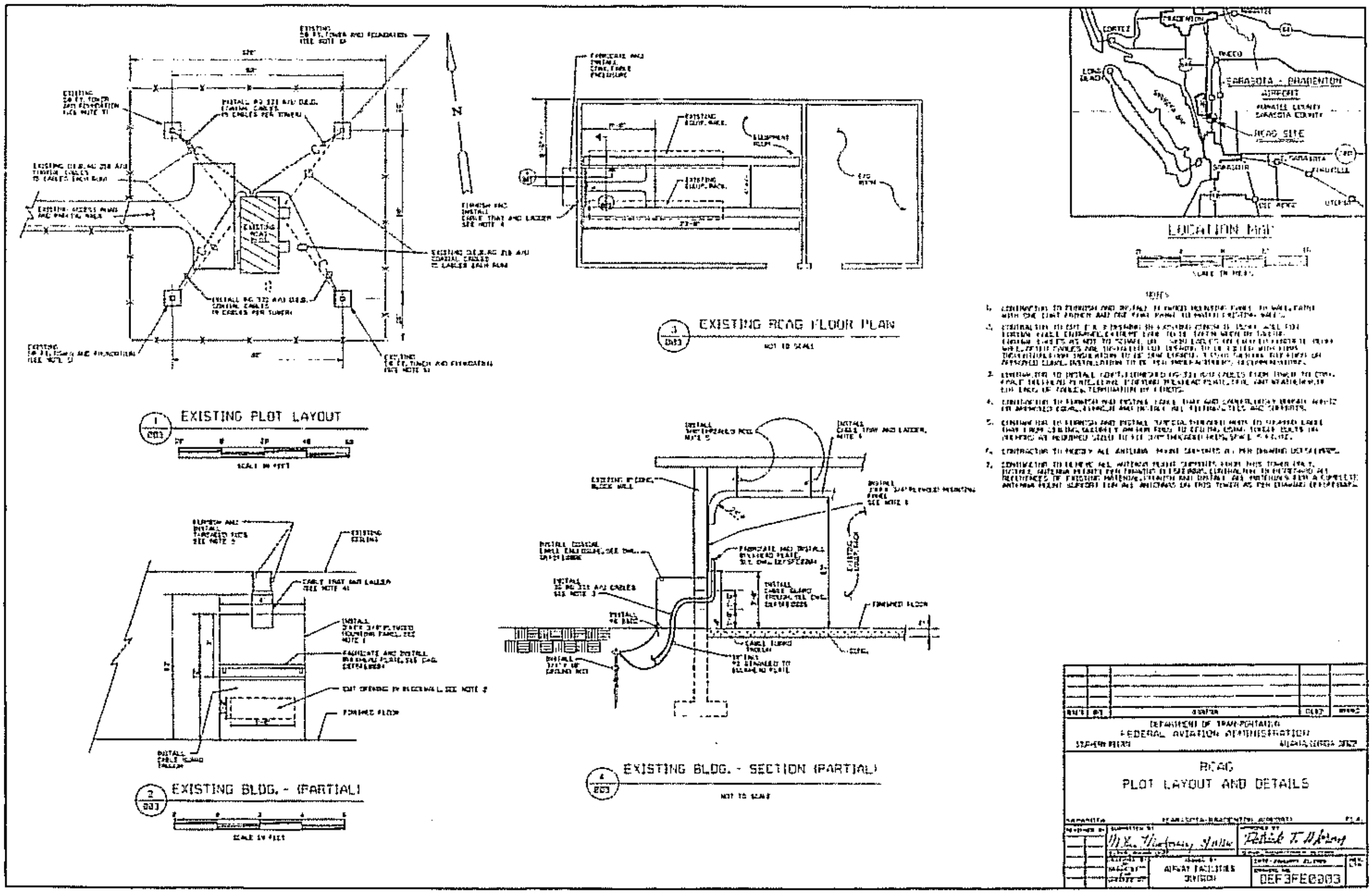

EXISTING PLOT LAYOUT
EXISTING RCAG FLOOR PLAN
NOT TO SCALE
EXISTING BLDG. - (PARTIAL)
EXISTING BLDG. - SECTION (PARTIAL)
NOT TO SCALE
LOCATION MAP
SARASOTA - BRADENTON AIRPORT
RCAG SITE
NOTES
FINISHED FLOOR
DEPARTMENT OF TRANSPORTATION
FEDERAL AVIATION ADMINISTRATION
RCAG
PLOT LAYOUT AND DETAILS
AIRWAY FACILITIES DIVISION
DEF3FE0003

General Decision Number: FL080070 07/25/2008 FL70

Superseded General Decision Number: FL20070073

State: Florida

Construction Type: Building

Counties: Madison and Taylor Counties in Florida.

BUILDING CONSTRUCTION PROJECTS (does not include single family homes and apartments up to and including four stories)

Modification Number	Publication Date
0	02/08/2008
1	07/25/2008

* SUFL1990-021 01/25/1990

	Rates	Fringes
Air Conditioning Mechanic	$ 6.55	
BRICKLAYER	$ 6.85	
CARPENTER	$ 9.70	.78
CEMENT MASON/CONCRETE FINISHER	$ 6.55	
DRYWALL HANGER	$ 7.00	
ELECTRICIAN	$ 8.00	
GLAZIER	$ 7.00	
IRONWORKER	$ 8.00	
LABORER	$ 6.55	
MILLWRIGHT	$ 9.65	
PAINTER	$ 6.55	
PLUMBER	$ 9.65	
ROOFER, Including Built Up, Composition and Single Ply Roofs	$ 6.55	
Sheet metal worker	$ 7.00	
TILE SETTER	$ 7.00	
TRUCK DRIVER	$ 6.55	

WELDERS - Receive rate prescribed for craft performing operation to which welding is incidental.

==========

Unlisted classifications needed for work not included within the scope of the classifications listed may be added after award only as provided in the labor standards contract clauses (29CFR 5.5 (a) (1) (ii)).

In the listing above, the "SU" designation means that rates listed under the identifier do not reflect collectively bargained wage and fringe benefit rates. Other designations indicate unions whose rates have been determined to be prevailing.

WAGE DETERMINATION APPEALS PROCESS

1.) Has there been an initial decision in the matter? This can be:

* an existing published wage determination
* a survey underlying a wage determination
* a Wage and Hour Division letter setting forth a position on a wage determination matter
* a conformance (additional classification and rate) ruling

On survey related matters, initial contact, including requests for summaries of surveys, should be with the Wage and Hour Regional Office for the area in which the survey was conducted because those Regional Offices have responsibility for the Davis-Bacon survey program. If the response from this initial contact is not satisfactory, then the process described in 2.) and 3.) should be followed.

With regard to any other matter not yet ripe for the formal process described here, initial contact should be with the Branch of Construction Wage Determinations. Write to:

Branch of Construction Wage Determinations
Wage and Hour Division
U.S. Department of Labor
200 Constitution Avenue, N.W.
Washington, DC 20210

2.) If the answer to the question in 1.) is yes, then an interested party (those affected by the action) can request review and reconsideration from the Wage and Hour Administrator (See 29 CFR Part 1.8 and 29 CFR Part 7). Write to:

Wage and Hour Administrator
U.S. Department of Labor
200 Constitution Avenue, N.W.
Washington, DC 20210

The request should be accompanied by a full statement of the interested party's position and by any information (wage payment data, project description, area practice material, etc.) that the requestor considers relevant to the issue.

3.) If the decision of the Administrator is not favorable, an interested party may appeal directly to the Administrative Review Board (formerly the Wage Appeals Board). Write to:

Administrative Review Board
U.S. Department of Labor
200 Constitution Avenue, N.W.
Washington, DC 20210

4.) All decisions by the Administrative Review Board are final.

==========

END OF GENERAL DECISION

BUSINESS DECLARATION

1 Name of Firm: _____ Tax Identification No.: _____

2 Address of Firm: _____ DUNS No.: _____

3 a. Telephone Number of Firm: _____ b. Fax Number of Firm: _____

4 a. Name of Person Making Declaration _____

b. Telephone Number of Person Making Declaration _____

c. Position Held in the Company _____

5 Controlling Interest in Company *("X" all appropriate boxes)*

☐ a. Black American ☐ b. Hispanic American ☐ c. Native American ☐ d. Asian American

☐ e. Other Minority *(Specify)* _____ ☐ f. Other *(Specify)* _____

☐ g. Female ☐ h. Male ☐ i. 8(a) Certified *(Certification letter attached)* ☐ j. Service Disabled Veteran Small Business

6 Is the person identified in Number 4 above, responsible for day-to-day management and policy decision making, including but not limited to financial and management decisions?

☐ a. Yes ☐ b. No *(If "NO," provide the name and telephone number of the person who has this authority.)*

_____

7 Nature of Business *(Specify all services/products (NAIC))* _____

8 (a) Years the firm has been in business _____ (b) No. of Employees _____

9 Type of Ownership: ☐ a. Sole Ownership ☐ b. Partnership

☐ c. Other *(Explain)* _____

10 Gross receipts of the firm for the last three years:

a.1. Year Ending: _____ b.1. Gross Receipts _____

a.2. Year Ending: _____ b.2. Gross Receipts _____ a.3. Year Ending: _____ b.3. Gross Receipts _____

11 Is the firm a small business? ☐ a. Yes ☐ b. No

12 Is the firm a service disabled veteran owned small business? ☐ a. Yes ☐ b. No

13 Is the firm a socially and economically disadvantaged small business? ☐ a. Yes ☐ b. No

I DECLARE THAT THE FOREGOING STATEMENTS CONCERNING _____ ***ARE TRUE AND CORRECT TO THE BEST OF MY KNOWLEDGE, INFORMATION, AND BELIEF. I AM AWARE THAT I AM SUBJECT TO CRIMINAL PROSECUTION UNDER THE PROVISIONS OF 18 USCS 1001.***

14. a. Signature _____ b. Date: _____

c. Typed Name _____ d. Title: _____