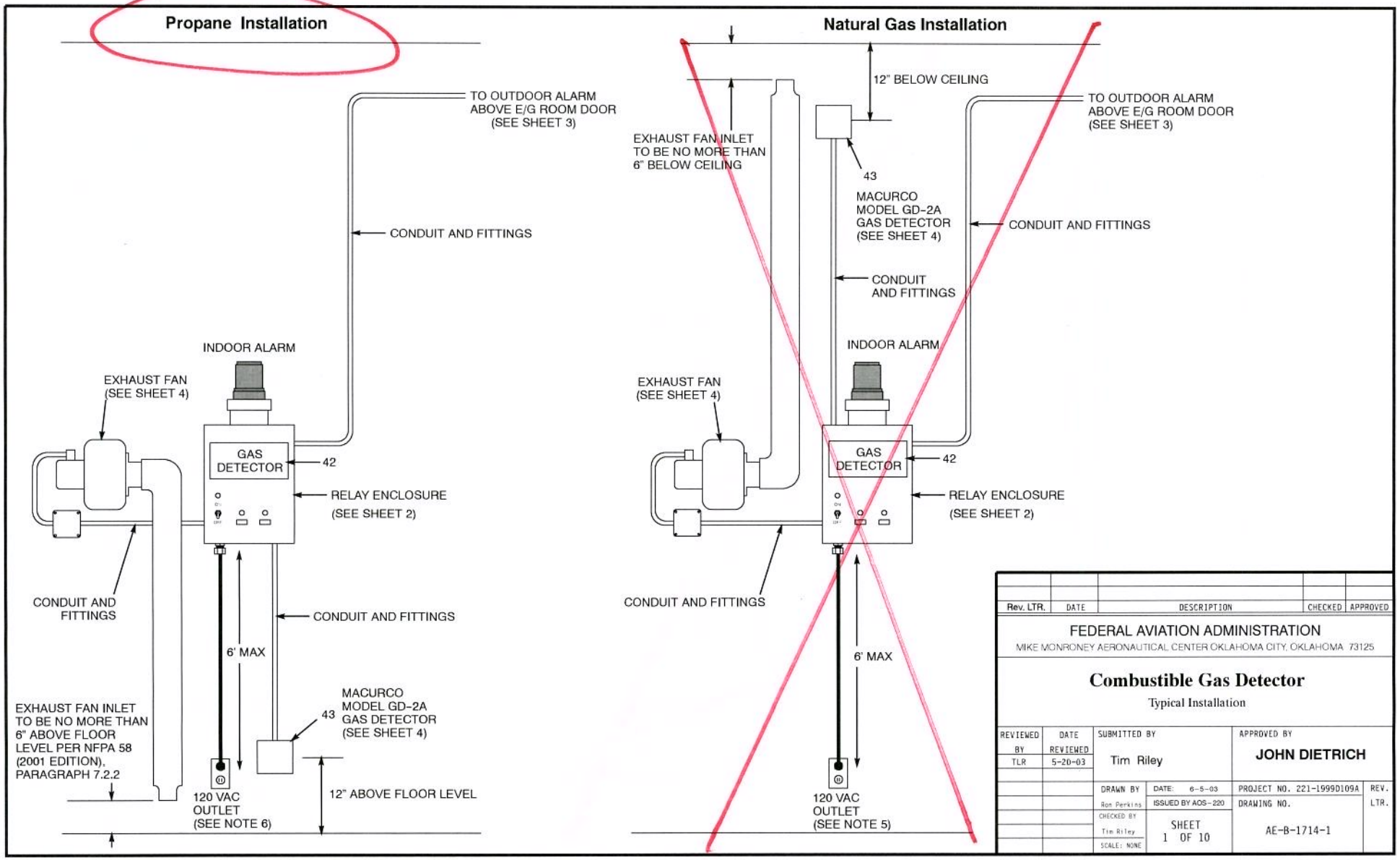
Propane Installation
TO OUTDOOR ALARM ABOVE E/G ROOM DOOR (SEE SHEET 3)
CONDUIT AND FITTINGS
INDOOR ALARM
EXHAUST FAN (SEE SHEET 4)
GAS DETECTOR
42
RELAY ENCLOSURE (SEE SHEET 2)
CONDUIT AND FITTINGS
CONDUIT AND FITTINGS
6' MAX
EXHAUST FAN INLET TO BE NO MORE THAN 6" ABOVE FLOOR LEVEL PER NFPA 58 (2001 EDITION), PARAGRAPH 7.2.2
43
MACURCO MODEL GD-2A GAS DETECTOR (SEE SHEET 4)
120 VAC OUTLET (SEE NOTE 6)
12" ABOVE FLOOR LEVEL
Natural Gas Installation
12" BELOW CEILING
TO OUTDOOR ALARM ABOVE E/G ROOM DOOR (SEE SHEET 3)
EXHAUST FAN INLET TO BE NO MORE THAN 6" BELOW CEILING
43
MACURCO MODEL GD-2A GAS DETECTOR (SEE SHEET 4)
CONDUIT AND FITTINGS
CONDUIT AND FITTINGS
INDOOR ALARM
EXHAUST FAN (SEE SHEET 4)
GAS DETECTOR
42
RELAY ENCLOSURE (SEE SHEET 2)
CONDUIT AND FITTINGS
6' MAX
120 VAC OUTLET (SEE NOTE 5)
Rev. LTR.
DATE
DESCRIPTION
CHECKED
APPROVED
FEDERAL AVIATION ADMINISTRATION
MIKE MONRONEY AERONAUTICAL CENTER OKLAHOMA CITY, OKLAHOMA 73125
Combustible Gas Detector
Typical Installation
REVIEWED BY
TLR
DATE REVIEWED
5-20-03
SUBMITTED BY
Tim Riley
APPROVED BY
JOHN DIETRICH
DRAWN BY
Ron Perkins
DATE: 6-5-03
ISSUED BY AOS-220
CHECKED BY
Tim Riley
SCALE: NONE
SHEET 1 OF 10
PROJECT NO. 221-1999D109A
DRAWING NO.
AE-B-1714-1
REV. LTR.

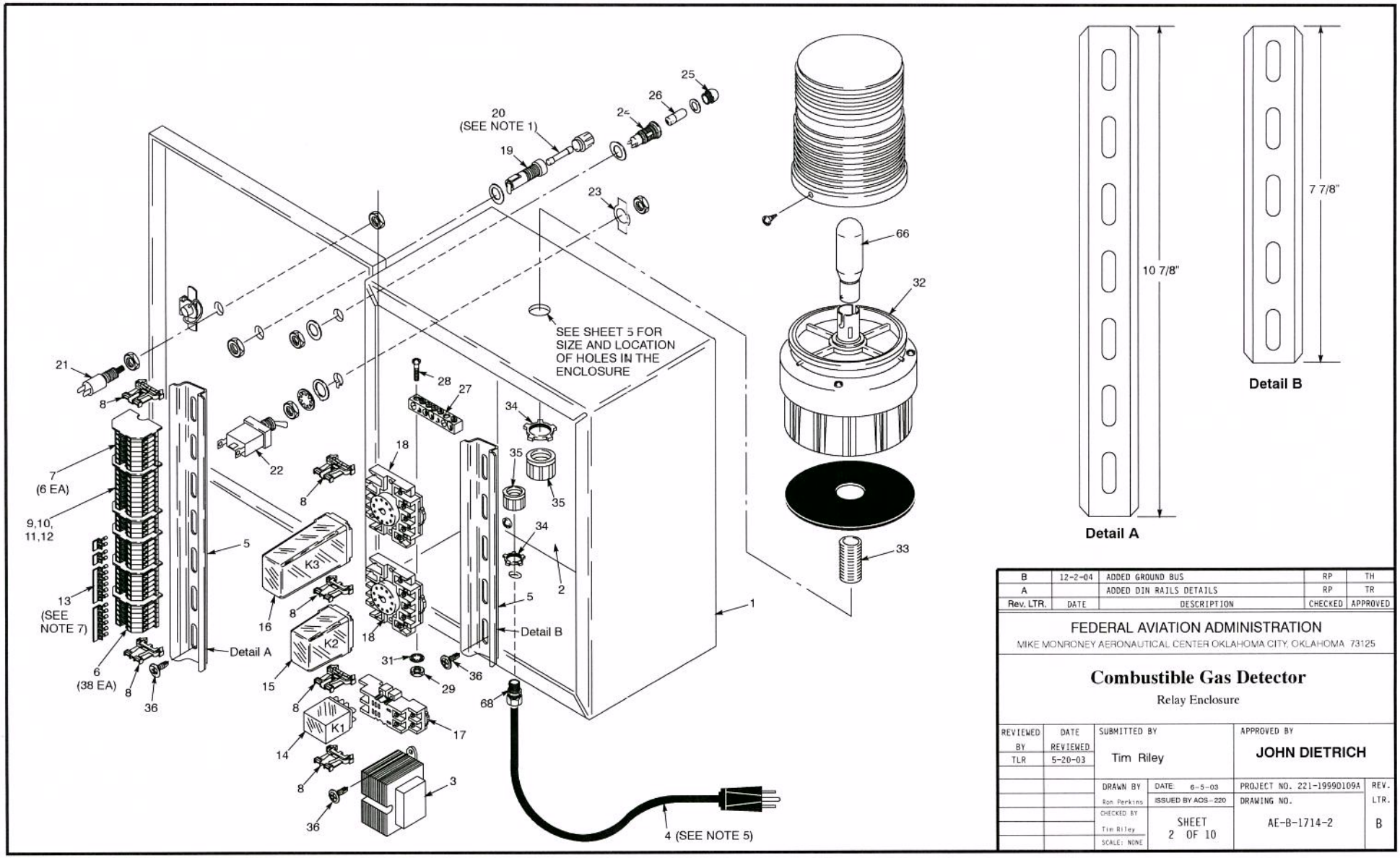

Rev. LTR.	DATE	DESCRIPTION	CHECKED	APPROVED
B	12-2-04	ADDED GROUND BUS	RP	TH
A		ADDED DIN RAILS DETAILS	RP	TR

FEDERAL AVIATION ADMINISTRATION
MIKE MONRONEY AERONAUTICAL CENTER OKLAHOMA CITY, OKLAHOMA 73125

Combustible Gas Detector

Relay Enclosure

REVIEWED BY	DATE REVIEWED	SUBMITTED BY	APPROVED BY
TLR	5-20-03	Tim Riley	JOHN DIETRICH

DRAWN BY Ron Perkins	DATE 6-5-03 ISSUED BY AOS-220	PROJECT NO. 221-19990109A	REV. LTR.
CHECKED BY Tim Riley	SHEET 2 OF 10	DRAWING NO. AE-B-1714-2	B
SCALE: NONE			

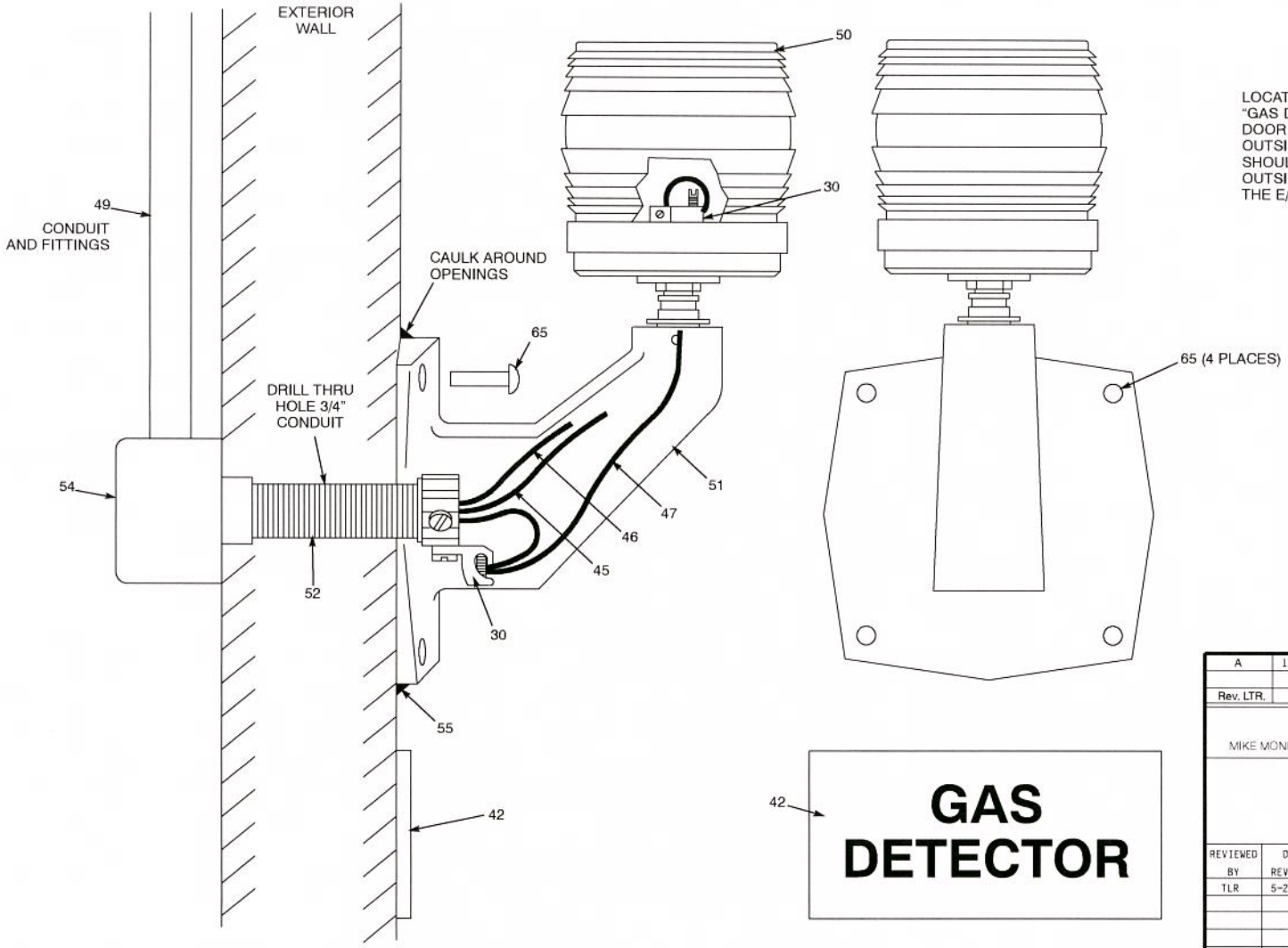

LOCATE THE OUTDOOR ALARM STROBE LIGHT AND "GAS DETECTOR" NAMEPLATE ABOVE THE EXTERIOR DOOR TO THE ENGINE GENERATOR ROOM ON THE OUTSIDE WALL OF THE BUILDING. THE ALARM LIGHT SHOULD BE VISIBLE TO PERSONNEL FROM THE OUTSIDE OF THE BUILDING SO THEY DO NOT ENTER THE E/G ROOM IF AN ALARM CONDITION EXISTS.

Rev. LTR.	DATE	DESCRIPTION	CHECKED	APPROVED
A	12-2-04	ADDED GROUNDING BUSHING	RP	TH

FEDERAL AVIATION ADMINISTRATION
MIKE MONRONEY AERONAUTICAL CENTER OKLAHOMA CITY, OKLAHOMA 73125

Combustible Gas Detector

Outdoor Alarm Installation

REVIEWED BY	DATE REVIEWED	SUBMITTED BY		APPROVED BY	
TLR	5-20-03	Tim Riley		JOHN DIETRICH	
		DRAWN BY Ron Perkins	DATE: 6-5-03	PROJECT NO. 221-1999D109A	REV.
			ISSUED BY AOS-220	DRAWING NO.	LTR.
		CHECKED BY Tim Riley	SHEET 3 OF 10	AE-B-1714-3	A
		SCALE: NONE			

Exhaust Fan Installation

A PROPANE INSTALLATION IS SHOWN. THE SAME COMPONENTS ARE USED FOR NATURAL GAS. FOR NATURAL GAS, THE DUCTWORK (ITEMS 58, 59, 60) GOES TO THE CEILING.

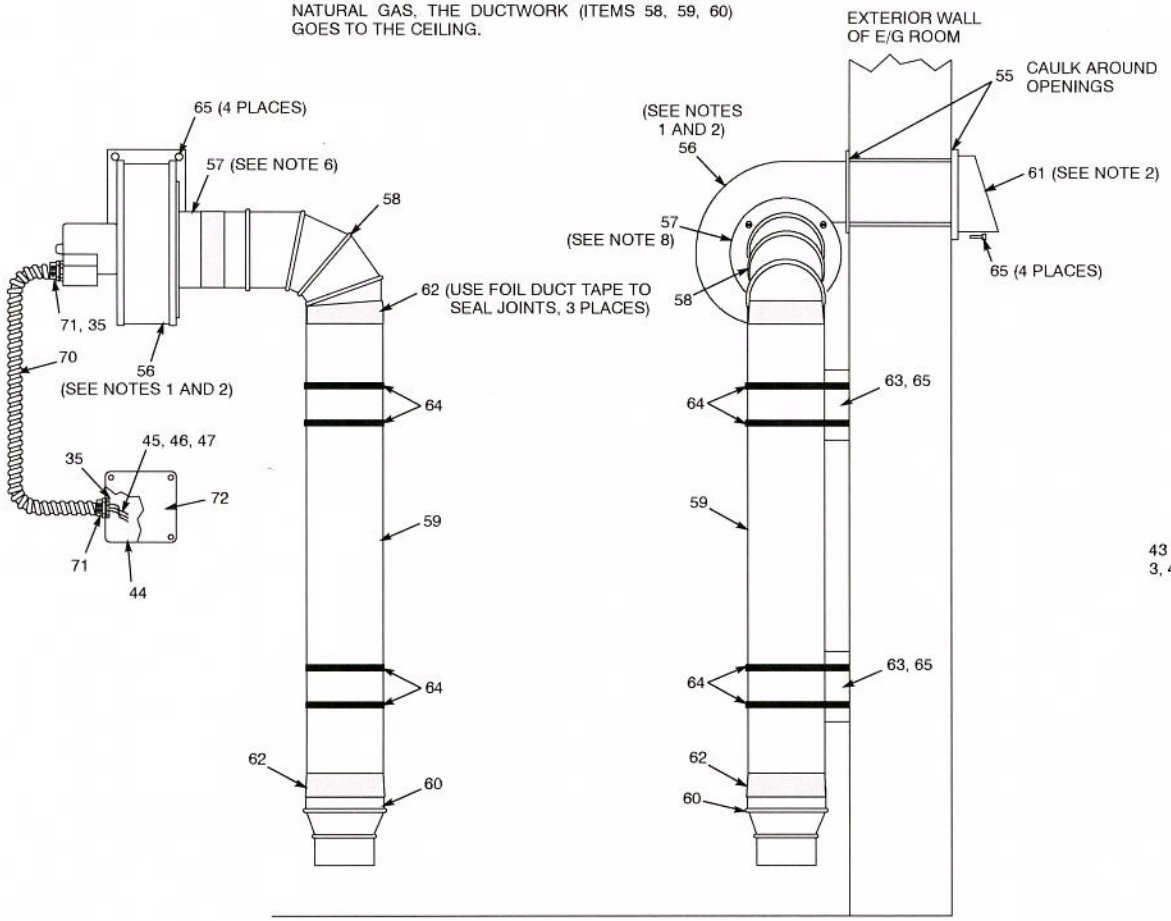

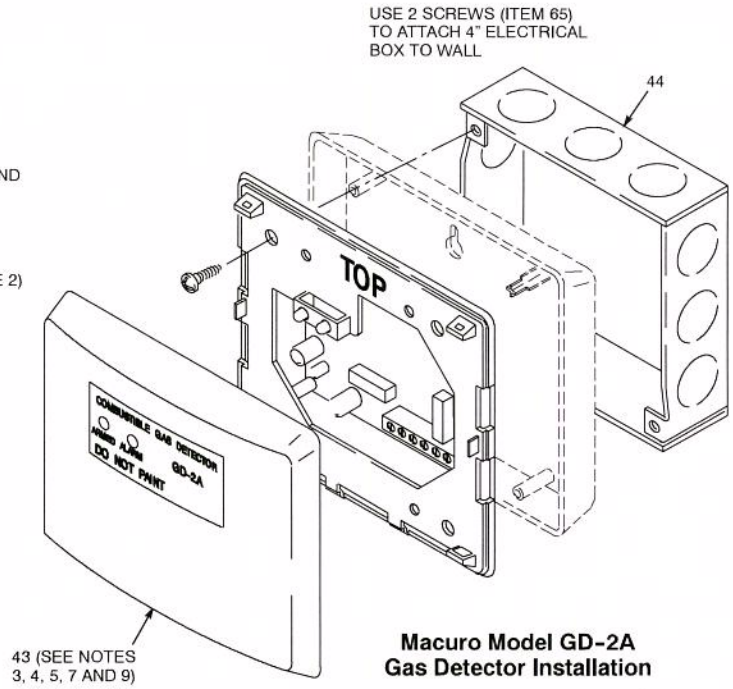

Macuro Model GD-2A Gas Detector Installation

Rev. LTR.	DATE	DESCRIPTION	CHECKED	APPROVED
A	12-2-04	CHANGED GAS DETECTOR DETAIL	RP	TH

FEDERAL AVIATION ADMINISTRATION
MIKE MONRONEY AERONAUTICAL CENTER OKLAHOMA CITY, OKLAHOMA 73125

Combustible Gas Detector

Exhaust Fan and Gas Detector Installation

REVIEWED BY	DATE REVIEWED	SUBMITTED BY	APPROVED BY
TLR	5-20-03	Tim Riley	JOHN DIETRICH

DRAWN BY	DATE: 6-5-03	PROJECT NO. 221-1999D109A	REV. LTR.
Ron Perkins	ISSUED BY AOS-220	DRAWING NO.	
CHECKED BY Tim Riley	SHEET 4 OF 10	AE-B-1714-4	A
SCALE: NONE			

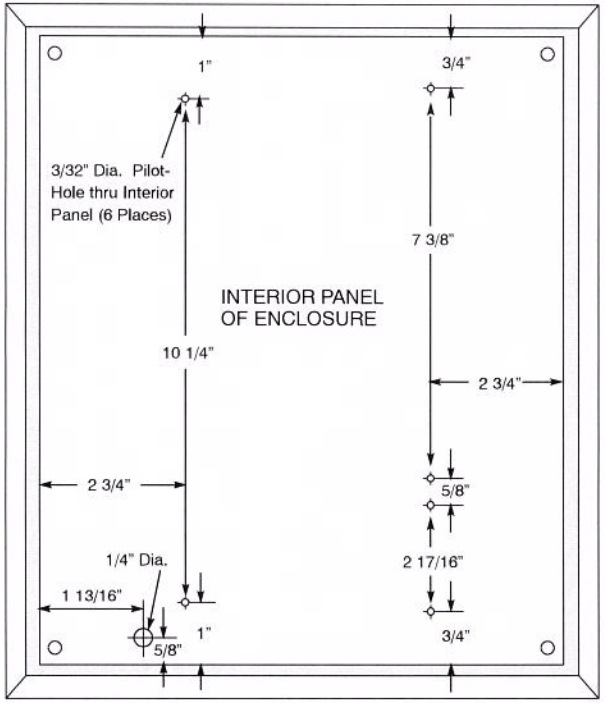

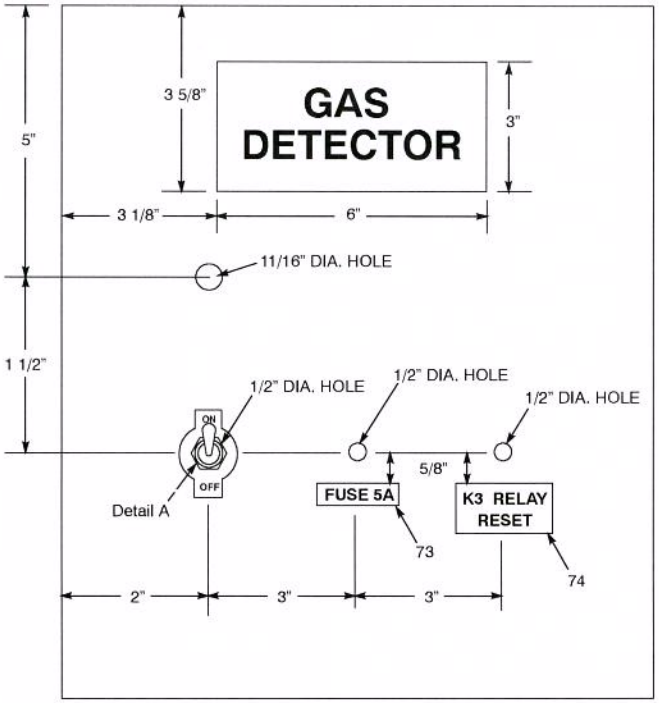

FRONT OF ENCLOSURE

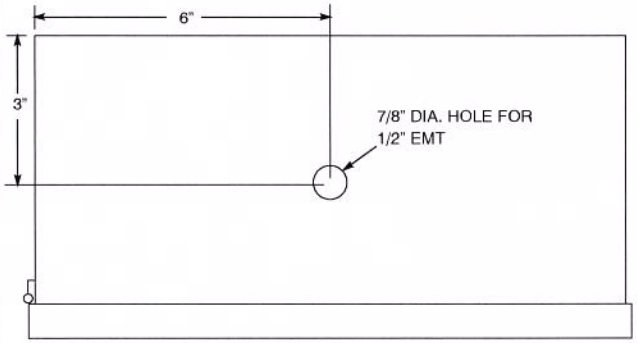

TOP OF ENCLOSURE

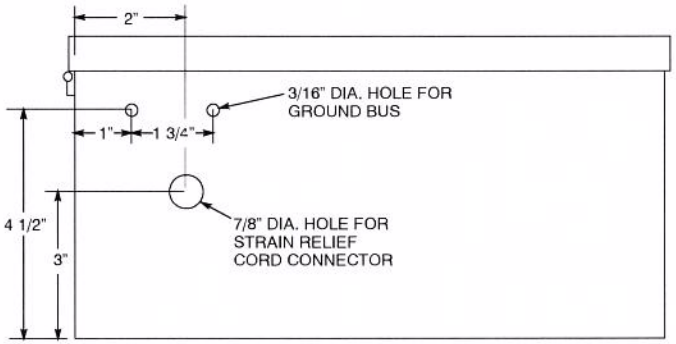

BOTTOM OF ENCLOSURE

Rev. LTR.	DATE	DESCRIPTION	CHECKED	APPROVED
B	12-2-04	ADDED GROUND STRAP HOLES	RP	TH
A	10-29-03	CHANGED TO ITEMS 73 AND 74	RP	TR

FEDERAL AVIATION ADMINISTRATION
MIKE MONRONEY AERONAUTICAL CENTER OKLAHOMA CITY, OKLAHOMA 73125

Combustible Gas Detector

Drilling Detail

REVIEWED BY	DATE REVIEWED	SUBMITTED BY	APPROVED BY
TLR	5-20-03	Tim Riley	JOHN DIETRICH

DRAWN BY Ron Perkins	DATE: 6-5-03 ISSUED BY AOS-220	PROJECT NO. 221-1999D109A	REV. LTR.
CHECKED BY Tim Riley	SHEET 5 OF 10	DRAWING NO. AB-B-1714-5	B
SCALE: NONE			

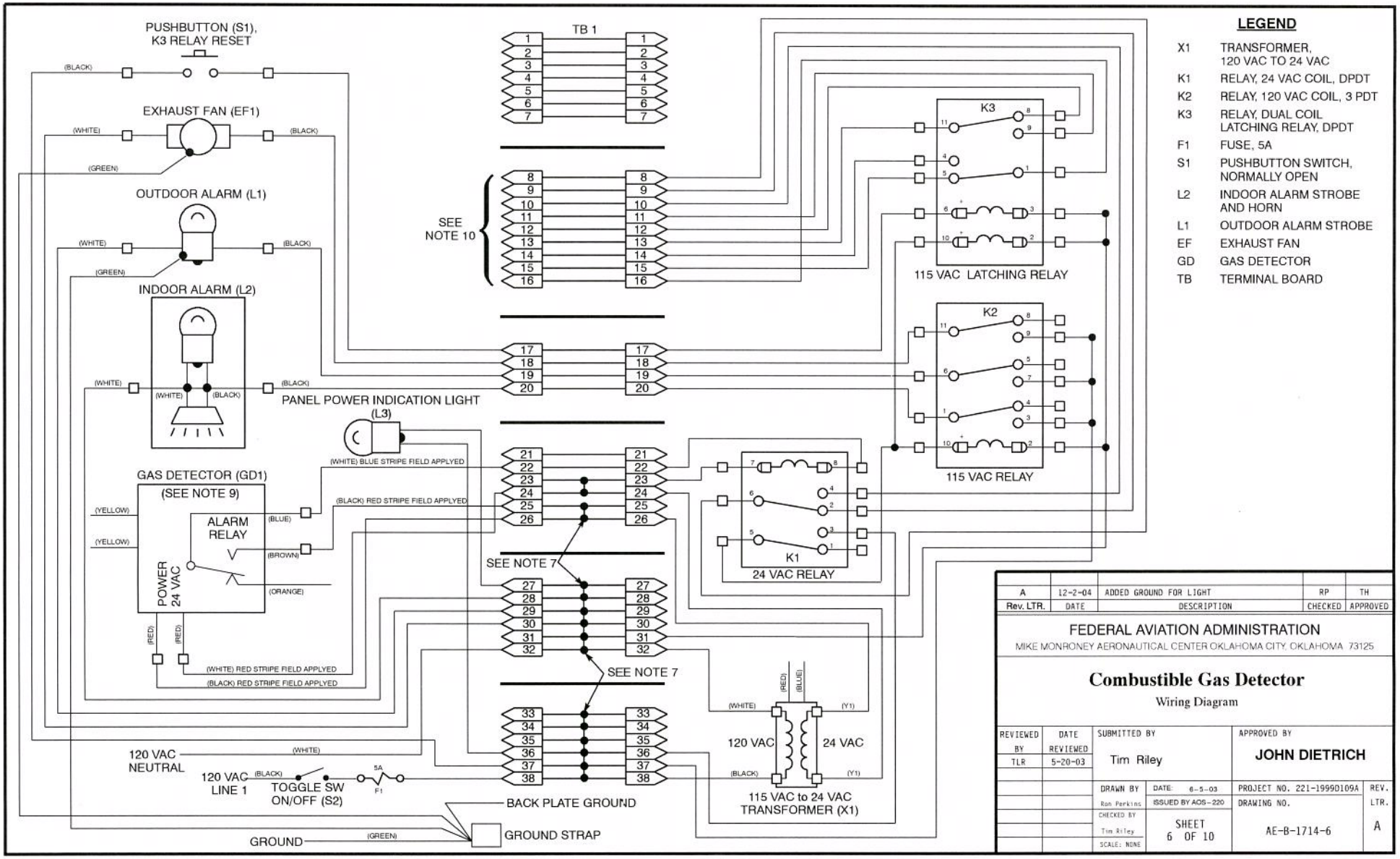

LEGEND

X1	TRANSFORMER, 120 VAC TO 24 VAC
K1	RELAY, 24 VAC COIL, DPDT
K2	RELAY, 120 VAC COIL, 3 PDT
K3	RELAY, DUAL COIL LATCHING RELAY, DPDT
F1	FUSE, 5A
S1	PUSHBUTTON SWITCH, NORMALLY OPEN
L2	INDOOR ALARM STROBE AND HORN
L1	OUTDOOR ALARM STROBE
EF	EXHAUST FAN
GD	GAS DETECTOR
TB	TERMINAL BOARD

Rev. LTR.	DATE	DESCRIPTION	CHECKED	APPROVED
A	12-2-04	ADDED GROUND FOR LIGHT	RP	TH

FEDERAL AVIATION ADMINISTRATION
MIKE MONRONEY AERONAUTICAL CENTER OKLAHOMA CITY, OKLAHOMA 73125

Combustible Gas Detector
Wiring Diagram

REVIEWED BY	DATE REVIEWED	SUBMITTED BY	APPROVED BY
TLR	5-20-03	Tim Riley	JOHN DIETRICH

DRAWN BY Ron Perkins	DATE: 6-5-03 ISSUED BY AOS-220	PROJECT NO. 221-1999D109A	REV. LTR.
CHECKED BY Tim Riley	SHEET 6 OF 10	DRAWING NO. AE-B-1714-6	A
SCALE: NONE			

Theory of Operation

A. The Macuurco Model GD–2A gas detector is powered by 24Vac from the transformer inside the NEMA enclosure.

B. When the Macurco Model GD–2A gas detector (GD1) senses the presence of a combustible gas, the gas detector alarm contacts close (GD1 ALARM).

C. The closure of the gas detector alarm contacts applies 24Vac to the K1 relay coil. K1 relay contacts 3/5 close and apply 120 Vac to the K2 and K3 relay coils. K1 relay contacts 6/4 close (these contacts are available for site specific use).

D. K2 relay contacts 3/1, 7/6, and 9/11 close and energize the Indoor Alarm (L2), the Outdoor Alarm (L1), and the Exhaust Fan (EF1) respectively.

E. K3 relay contacts 1/4 and 11/9 close and latch (these contacts are available for site specific use).

F. When the combustible gas clears the E/G room, the gas detector automatically resets. The gas detector alarm contacts open and deenergize the K1 relay.

G. K1 relay contacts 3/5 open and deenergize the K2 and K3 relays.

H. K2 relay contacts 3/1, 7/6, and 9/11 open and deenergize the Indoor Alarm (L2), Outdoor Alarm (L1), and the Exhaust Fan (EF1).

I. The K3 relay contacts 1/4 and 11/9 remain closed and latched. To reset the K3 relay contacts, press the "K3 RELAY RESET" pushbutton switch on the front of the NEMA enclosure.

(NOTE: The Macurco Model GD–2A gas detector can be modified to have the alarm contacts latch. Remove the front cover from the gas detector and locate the "CLIP FOR LATCH IN" jumper wire in the upper right corner of the printed circuit board. By cutting the jumper wire, the gas detector will remain latched in the alarm mode once a combustible gas has been detected. To reset the gas detector, remove power from the unit.)

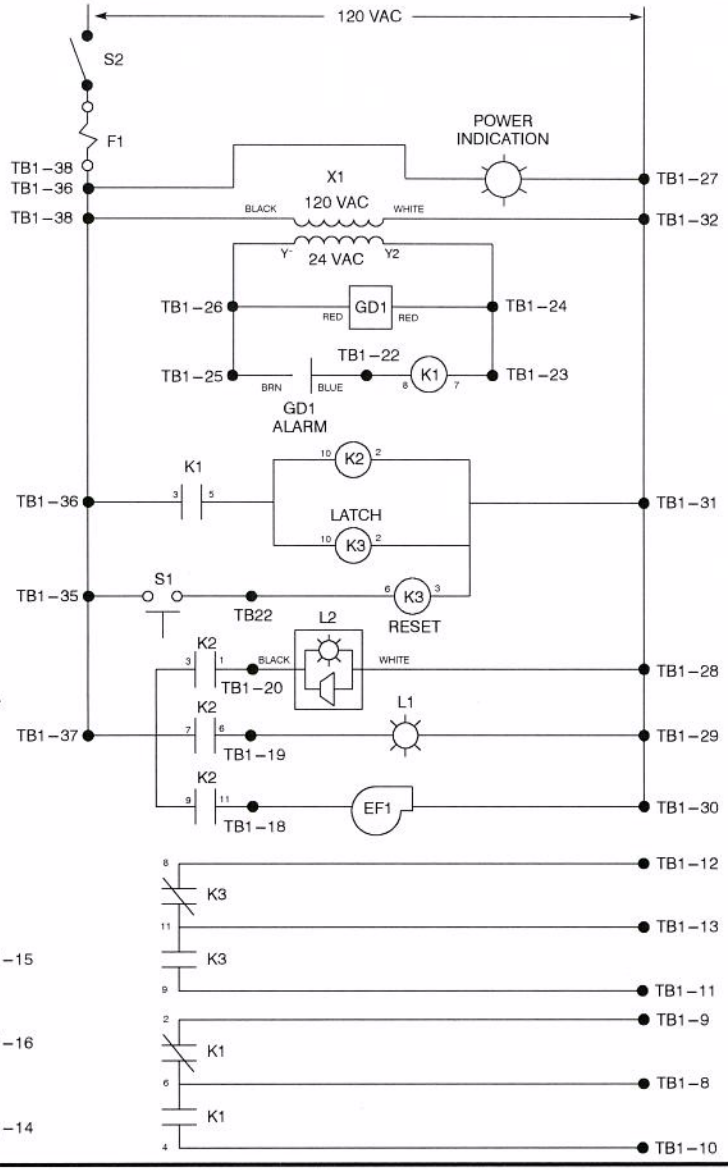

(SEE NOTE 8 FOR UNUSED RELAY CONTACTS)

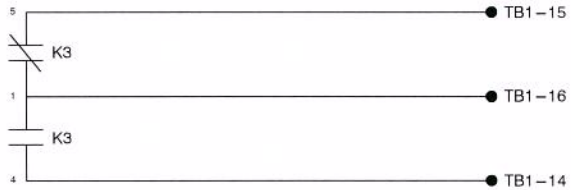

LEGEND

X1	TRANSFORMER, 115 VAC TO 24 VAC
K1	RELAY, 24 VAC COIL, DPDT
K2	RELAY, 115 VAC COIL, 3 PDT
K3	RELAY, DUAL COIL LATCHING RELAY, DPDT
F1	FUSE, 5A
S1	PUSHBUTTON SWITCH, NORMALLY OPEN
L2	INDOOR ALARM STROBE AND HORN
L1	OUTDOOR ALARM STROBE
EF1	EXHAUST FAN
GD1	GAS DETECTOR

ALL RELAY CONTACTS SHOWN DE–ENERGIZED

Rev. LTR.	DATE	DESCRIPTION	CHECKED	APPROVED
A	12-2-04	MOVED TB1-38 TO CORRECT SPOT	RP	TH

FEDERAL AVIATION ADMINISTRATION
MIKE MONRONEY AERONAUTICAL CENTER OKLAHOMA CITY, OKLAHOMA 73125

Combustible Gas Detector

Schematic Diagram

REVIEWED BY	DATE REVIEWED	SUBMITTED BY	APPROVED BY
TLR	5-20-03	Tim Riley	JOHN DIETRICH

DRAWN BY Ron Perkins	DATE: 6-5-03 ISSUED BY AOS-220	PROJECT NO. 221-1999D109A	REV. LTR.
CHECKED BY Tim Riley	SHEET 7 OF 10	DRAWING NO. AE-B-1714-7	A
SCALE: NONE			

PARTS LIST

Drwg. No.	Description	Quantity per Kit	Manufacture	Mfg. Part Number
1	Enclosure, NEMA 1, 12"x14"x6", hinged, Hoffman part number A-14N126	1 Ea.	Hoffman	A-14N126
2	Interior Panel, for NEMA 1 enclosure, Hoffman part number A-14N12P	1 Ea.	Hoffman	A-14N12P
3	Transformer, 120VAC/24VAC, 40VA rating, Steveco part number 90-T40F3	1 Ea.	Stevco	90-T40F3
4	Cord, black power supply, 8 ft long, 16/3 conductors, 13 Amp., Jacket Type SJO	1 Ea.	Carol	W2686.70.01
5	DIN Rail, Slotted, 35mm X 7.5mm , 1 meter long, Square D part number 9080MH339	19 In.	Square D	9080MH339
6	Terminal Block, DIN Rail, 600V, 30A, 6mm wide, gray, Square D part number AB1VV435U	38 Ea.	Square D	AB1VV435U
7	Partition, DIN rail, Gray, 20/30A, Square D part number AB1AS24	6 Ea.	Square D	AB1AS24
8	End Clamp, DIN rail, 35mm, Square D part number AB1AB8P35	6 Ea.	Square D	AB1AB8P35
9	Markers, DIN rail, 6mm, 1-10, Square D part number AB1B610	1 Ea.	Square D	AB1B610
10	Markers, DIN rail, 6mm, 11-20, Square D part number AB1B620	1 Ea.	Square D	AB1B620
11	Markers, DIN rail, 6mm, 21-30, Square D part number AB1B630	1 Ea.	Square D	AB1B630
12	Markers, DIN rail, 6mm, 31-40, Square D part number AB1B640	1 Ea.	Square D	AB1B640
13	Pole Jumper, DIN rail, 10 pole, 6mm width, Square D part number AB1ALN410	2 Ea.	Square D	AB1ALN410
14	Relay, Socket Mount, 24VAC coil, DPDT, 15A, 30VDC contacts, 8 pin, Tyco Electronics part number K10P-11A15-24	1 Ea.	Tyco Electronics	K10P-11A15-2-
15	Relay, Socket Mount, 120VAC coil, 3PDT, 10A, 250 VDC contacts, Tyco Electronics part number KRPA-14AG-120	1 Ea.	Tyco Electronics	KRPA-14AG-120
16	Relay, Latching Dual Coil, 22 mA, 2200 ohm Coil, 11 pin, Idec part number RR2KP-UAC120V	1 Ea.	Idec	RR2KP-UAC120V
17	Socket, Relay, K10, DIN rail mount, 2 pin, 2 pole, Tyco Electronics part number 27E895	1 Ea.	Tyco Electronics	27E895
18	Socket, Relay, Din rail, KRPA 11 pin, octal mount, Tyco Electronics part number 27E892	2 Ea.	Tyco Electronics	27E892
19	Fuse Holder, Panel Mount 3AG, Littelfuse part number H342828	1 Ea.	Littlefuse	HB42828
20	Fuse, 3AG, 5A, 250VAC, fast acting, Littelfuse part number 312005 (3 Spares)	4 Ea.	Littelfuse	312005
21	Switch, Pushbutton SPST, ON/OFF, General Purpose AC Rated, Eaton Cutler-Hammer part number 8411K11	1 Ea.	Cutler-Hammer	8411K11
22	Switch, Toggle, SPST, 15A @125 VAC, on/off, Eaton Cutler-Hammer part number 8530K9	1 Ea.	Cutler-Hammer	8530K9
23	Switch Plate, on/off, 0.469 dia., Aluminum, Tyco Electronics part number SPA-42	1 Ea.	Tyco Electronics	SPA-42
24	Holder for 11/16 inch mounting hole, bayonet base, T-3 bulb, Dialight part number 081-0410-01-303	1 Ea.	Dialight	081-0410-01-303
25	Lens Cap for 081 Series Base, 095 Series, clear, Dialight part number 095-3137-003	1 Ea.	Dialight	095-3137-003
26	Red LED Lamp, 130.00 volt, 20000 hour Average Life, T-3-1/4 Lamp Size, SPC Technology part number 10559 (1 Spares)	2 Ea.	SPC Technology	SPC10559
27	Grounding Bus Kit, 2-14 AWG, 5 position, Cutler-Hammer part number GBK5	1 Ea.	Cutler-Hammer	GBK5
28	Bolt, Hex Head, #10-24 by 0.75" long, for mounting grounding lug to the enclosure, Rockford part number P3166-245	2 Ea.	Generic	Generic
29	Nut, for #10-24, for mounting grounding lug to the enclosure, Rockford part number P4150-011	2 Ea.	Generic	Generic
30	Grounding Bushing, ¾", Thomas & Betts part number 3871-TB	2 Ea.	Graybar	88264307
31	Lock Washer, Star, for #10, for mounting grounding lug to the enclosure, Zinc-Chromate, Rockford part number XSP-210	2 Ea.	Generic	Generic
32	Alarm, Audible/Visual Alarm Light, red lens, Federal Signal part number AV1-120R	1 Ea.	Federal Signal	AV1-120R
33	Nipple, 1/2" Conduit, close nipple, galvanized steel	1 Ea.	Generic	Generic
34	Locknut, Conduit, 1/2 Inch, Steel, Plain, Rigid and IMC Conduit, Steel City part number LS101	2 Ea.	Generic	Generic
35	Bushing, Conduit 1/2" plastic, Crouse-Hinds part number 931	5 Ea.	Generic	Generic
36	Self-drilling screw, #10 by 0.50" long, Hex washer head, Rockford part number 5716-242 for mounting DIN rails and transformer to interior panel	6 Ea.	Generic	Generic
37	Terminal, nylon insulated fork, #18-14 wire range, blue, #6 screw size, Thomas and Betts part number RB14-6F	2 Ea.	Thomas & Betts	RB14-6F
38	Terminal, Female Spade Lug, fully insulated, #16-14 wire range, blue, 0.25" tab width, Panduit part number DNF14-250FIB-C, for fuse holder and pushbutton switch connections	6 Ea.	Panduit	DNF14-250FIB-C
39	Wire, #14 AWG THHN stranded, Yellow color, for wiring inside NEMA enclosure from terminal strip to relays	35 Ft.	Generic	Generic
40	Nameplate, Plastic, adhesive-backed, engraved, red background with white lettering "FUSE" 3/4" High x 1 1/4" Wide, with approximately 1/4" High Letters	1 Ea	Generic	Generic
41	Nameplate, Plastic, adhesive-backed, engraved, red background with white lettering "K3 RELAY RESET" 1 1/4" High x 1 3/4" Wide, with approximately 1/4" High Letters	1 Ea	Generic	Generic
42	Nameplate, Plastic, adhesive-backed, engraved, red background with white lettering "GAS DETECTOR" 3" High x 6" Wide, with approximately 5/8" High Letters	2 Ea.	Generic	Generic
43	Gas Detector, Combustible, Macurco part number GD-2A	1 Ea.	Macurco	GD-2A
44	Box Junction, 4" X 4" X 1 1/2", rounded corners, RACO part number 192	2 Ea.	Graybar	88216912
45	Wire, #14 AWG THHN stranded, Black color, for wiring to exhaust fan, outdoor alarm, and gas detector	75 Ft.	Generic	Generic
46	Wire, #14 AWG THHN stranded, White color, for wiring to exhaust fan, outdoor alarm, and gas detector	75 Ft.	Generic	Generic
47	Wire, #14 AWG THHN stranded, Green color, for exhaust fan ground wire	65 Ft.	Generic	Generic
48	Wire nuts, 10-18 AWG, yellow, 600V, Ideal part number 30-451	14 Ea.	Ideal	30-451
49	Conduit and Conduit Connectors 3/4" EMT As Required, couplings, lock nuts, plastic bushings, hanger, and straps, Conduit configuration determined by site	1	As Required	3/4" Misc. EMT & Fittings
50	Warning Light, red lens, 120VAC, Strobe light, Federal Signal part number 141ST-120R	1 Ea.	Federal Signal	141ST-120
51	Mounting kit, Warning Light, Federal Signal part number LWMB2	1 Ea.	Federal Signal	LWMB2
52	Nipple, 3/4" Rigid Conduit, running thread, galvanized steel Thomas & Betts # 8514. (Supplied by Site)	1 Ea.	As Required	Generic
53	Bushing, Conduit 3/4" plastic, Crouse-Hinds part number 932	6 Ea.	Crouse-Hinds	932
54	LB Fitting, Body w/ Cover, Conduit, for 3/4" EMT, Crouse-Hinds part number LB25-MTC	1 Ea.	Crouse-Hinds	LB25-MTC
55	Caulk, 100% Silicone, gray, cartridge, 10.1 oz., GE Part Number GE 50.08 12C, Home Depot SKU# 175-391	1 Ea.	General Electric	GE 50.08 12C
56	Exhaust Blower, Dayton, Shaded pole, single speed, 350cfm, 115VAC, 2.90A,	1 Ea.	Dayton	4C444
57	Take Off, 6" Air tight, galvanized, UPC number 050206932407 Masterflow, Home Depot SKU# 544-126	1 Ea.	Generic	Generic
58	Elbow, 6" adjustable 90 degree, galvanized, UPC number 050206923306, Home Depot SKU# 148-733	1 Ea.	Generic	Generic
59	Vent Pipe, 6" round x 60 " long, galvanized, UPC number 050206921104, Home Depot SKU# 148-679 (Length determined by site)	1 Ea.	As Required	Generic
60	Reducer, 6" to 5", galvanized, UPC number 050206925805, Home Depot SKU# 108-684	1 Ea.	Generic	Generic
61	Vent Hood, outdoor dryer, UPC number 079916520230, Home Depot SKU# 142-595	1 Ea.	Generic	Generic
62	Foil Tape, 2 in. wide X 30 feet long roll, aluminum, 4.9 mils, Nashua part number 3220020400, Home Depot SKU#455-195	30 Ft.	Generic	Generic
63	Channel, 1 5/8" X 1 5/8", Slotted, hot dipped galvanized, Unistrut part number P1000T-10HG, (2 X approx 4 inches long)	8 in.	Unistrut	P1000T-10HG
64	Wire Tie, heavy duty black outdoor, 34-1/4" long, Panduit part number PLT10EH-QO	4 Ea.	Panduit	PLT10EH-QO
65	Mounting Hardware, Wall, masonry, drywall, or wood screws and washers for mounting components to E/G building walls. (Supplied by site)	42 Ea.	Site Specific As Required	N/A
66	Replacement Bulb, for inside alarm light, Federal Signal part number K149123A	1 Ea.	Federal Signal	K149123A
67	Replacement Strobe Tube, for outdoor alarm light, Federal signal part number K149128A	1 Ea.	Federal Signal	K149128A
68	Cord Connector, Strain Relief, Hub size ½", RACO Part Number 3702-2, Cable size 0.250-0.375	1 Ea.	RACO	3702-2
69	Terminal, Nylon Insulated, Ring Tongue, #16-14 AWG, #10 Stud	2 Ea.	STA-KON	NW14-10
70	Steel Conduit, Flexible ½", Flexsteel ½"	3 Ft.	Graybar	93169026
71	Connector, Flexible Conduit, Straight, ½", Thomas & Betts part number 254-TB	2 Ea.	Graybar	88263843
72	Cover, Flat Blank for 4" Box, RACO part number 752	1 Ea.	Graybar	88217206

REV LTR	DATE	DESCRIPTION	CHECKED	APPROVED
C	11-23-04	Changed qnty on 47, 62; changed 27 – 31, 52	TH	TH
B	5-5-04	Changed parts on Items 25 and 26.	TH	TH
A	10-29-03	Added Items 73 and 74. Corrected Item 42	RP	TLR

FEDERAL AVIATION ADMINISTRATION
MIKE MONRONEY AERONAUTICAL CENTER OKLAHOMA CITY, OKLAHOMA 73125

Combustible Gas Detector
Drawing Notes

REVIEWED BY	DATE REVIEWED	SUBMITTED BY	APPROVED BY
TLR	05-20-03	Tim Riley	John Dietrich

DRAWN BY	DATE:	PROJECT NO. 221-1999D109A	REV LTR
Ron Perkins	06-05-03	ISSUED BY AOS-220	DRAWING NO.
CHKED BY Tim Riley	SHEET 8 OF 10	AE-B-1714-8	C
Scale: None			

DRAWING NOTES

Ref Design Dwg-ESF-D-RCAG-M001

1. ~~The Dayton exhaust fan specified in the parts list (Grainger 4C444) will support an engine room of approximately 300 square or less of floor area. The Dayton exhaust fan has a capacity of 350 cfm at 0.0 static pressure. If the engine room is greater than 300 square feet, then a larger fan should be used. If a larger exhaust fan is required, it may require a larger F1 fuse (item 20) that has a rating greater than 5A. Per the National Fire Protection Association Liquefied Petroleum Gas Code, NFPA 58 (2001 Edition), paragraph 7.2.2.1, one CFM of exhaust fan capacity is required for each square foot of floor space. For example, if the engine room floor is 15 feet by 18 feet in size (270 square feet), then an exhaust fan with a minimum capacity of 270 cfm should be installed.~~

2. The exhaust fan outlet shall discharge at least 5 feet away from any opening to the structure per NFPA 58 (2001 Edition), paragraph 7.2.2.1. Locate the exhaust fan outlet sufficiently above ground level to account for snow accumulation.

3. Mount the Macurco GD-2A combustible gas detector on a 4" by 4" square electrical box (item 44). Remove the front cover to the gas detector unit (it snaps into place). On the inside plastic frame of the gas detector, remove the two phillips head screws that attach the plastic frame to the back cover. Remove and discard the back cover to the gas detector. Align the holes in the plastic frame with the holes in the 4" square electrical box. Use the two screws provided with the 4" square electrical box to mount the gas detector frame to the box. Reinstall the front cover to the gas detector.

4. Test gas detector system after installation. After power is applied to the Macurco Model GD-2A gas detector, it will go through a warm-up period of 1 to 1 1/2 minutes during which alarms are inhibited. During the warm-up period, the green "ARMED" light will turn on and off. When the warm-up period is over, the green "ARMED" light will turn on continuously, indicating the gas detector is ready for operation. Test the operation of the gas detector by directing the gas from an ***unlighted*** butane cigarette lighter through one of the vent holes on the left side of the gas detector. It may take several seconds for the butane gas to activate the gas detector alarm. The red "ALARM" light on the gas detector will turn on and the inside visual/audible alarm, the exhaust fan, and the outdoor alarm light should be activated.

5. It is optional to provide power to the gas detecting equipment from a distribution panel at the facility using conduit and wiring rather than plugging into an existing wall outlet as shown.

6. Remove the four sheet metal screws that attach the fan inlet shroud to the fan housing. Use the four mounting holes in the fan inlet shroud as a guide to drill the four 1/4" diameter mounting holes through the flange on the air tight take off (item 57). Mount the airtight take off to the fan inlet shroud using the existing four sheet metal screws.

7. The Macurco Model GD-2A gas detector can be modified to have the alarm contacts latch. Remove the front cover from the gas detector and locate the jumper wire "CLIP FOR LATCH IN" in the upper right corner of the printed circuit board. By cutting the jumper wire, the gas detector will remain latched in the alarm mode once a combustible gas has been detected. To reset the gas detector, remove power from the unit.

8. The unused K1 relay contacts 6/2 (normally closed) and 6/4 (normally open) are available for site specific use. The K1 relay is a non-latching relay. The unused K3 relay contacts 1/5 (normally closed), 1/4 (normally open), 11/8 (normally closed), and 11/9 (normally open) are also available for site specific use. The K3 relay is a latching relay. Some options for the site-specific use of these additional relay contacts are:

   a. Use a set of normally open contacts to tie into the Environmental Remote Monitoring System (ERMS) equipment at the facility to remotely annunciate the gas detector alarm. The ERMS equipment has an ERMS Modification Kit 21, NSN 0000-00-0XX-XXXX, External Fuel Sensor Kit, available for leak detection and low fuel pressure monitoring (Note: The NSN for kit 21 was not assigned as of 9/26/02). Inside the ERMS cabinet, terminals TB2-15 and TB2-16 are used for the Leak Detector feature of ERMS. Select one set of normally open contacts inside the gas detector relay enclosure (K1 relay contacts 6/4, K3 latching relay contacts 1/4, or K3 latching relay contacts 11/9). Connect the normally open contacts from the gas detector relay panel across terminals TB2-15 and TB2-16 inside the ERMS cabinet. When the gas detector contacts close due to a gas leak, the ERMS equipment will annunciate a "Leak Detection".

   b. Use the normally closed K3 latching relay contact set 1/5 to disable the start/run circuit for the E/G. Consult the E/G control cabinet wiring diagram. For Kohler E/Gs, put the normally closed K3 latching relay contacts 1/5 (TB1-23 and TB1-24) in series with the Emergency Stop pushbutton circuit. For the older legacy E/G's, put the normally closed K3 latching relay contacts 1/5 (TB1-23 and TB1-24) in series with the Emergency Stop and Control Circuit switch. If a gas leak is detected, the gas detector contacts 1/5 latch open and either lockout or shutdown the E/G. After correcting the gas leak problem, the K3 latching relay must be reset before the E/G is available.

   c. Use the normally closed K3 latching relay contact set 1/5 to de-energize the fuel solenoid to the engine. Route the +12VDC (or +24VDC) power going to the fuel solenoid through the normally closed K3 latching relay contacts 1/5 (TB1-23 and TB1-24). If a gas leak is detected, the gas detector contacts 1/5 latch open and either lockout or shutdown the fuel solenoid valve. After correcting the gas leak problem, the K3 latching relay must be reset before the E/G is available. Note: If the gas detector alarms while the engine is operating, the engine will shut down due to fuel starvation and proceed through three crank cycles before locking out on an over-crank alarm.

REV LTR	DATE	DESCRIPTION	CHECKED	APPROVED

FEDERAL AVIATION ADMINISTRATION
MIKE MONRONEY AERONAUTICAL CENTER OKLAHOMA CITY, OKLAHOMA 73125

Combustible Gas Detector
Drawing Notes

REVIEWED BY	DATE REVIEWED	SUBMITTED BY		APPROVED BY	
TLR	05-20-03	Tim Riley		John Dietrich	
		DRAWN BY Ron Perkins	DATE: 06-05-03 ISSUED BY AOS-220	PROJECT NO. 221-1999D109A DRAWING NO.	REV LTR
		CHKED BY Tim Riley	SHEET 9 OF 10	AE-B-1714-9	
		Scale: None			

CAUTION

DC Outdoor Alarm Light. If the gas detecting system is used to disable or shutdown the E/G as outlined in steps b or c above, it is recommended that a DC voltage Outdoor Alarm strobe light be installed in place of the 120VAC Outdoor Alarm light. The DC voltage Outdoor Alarm light should be powered from the DC output terminals of the battery charger or directly from the batteries. A 12VDC Outdoor Alarm light (Grainger #3T943) or a 24VDC Outdoor Alarm light (Grainger #3T945) is available. If the E/G is shut down due to a gas leak and commercial power is not available, then the 120VAC Outdoor Alarm light will not have power to alert arriving personnel of a gas leak. Furthermore, the 120VAC exhaust fan will not be operating to clear the air inside the E/G room. If the outdoor alarm light is powered by DC battery voltage, then the E/G batteries will continue to power the outdoor alarm and alert arriving personnel of the gas leak until the batteries are depleted (the outdoor alarm light requires 0.18A for 12VDC and 0.08A for 24VDC). Use the set of normally latching open contacts on K3 11/9 for the new DC voltage Outdoor Alarm light. To convert to a DC voltage Outdoor Alarm light, remove the black Outdoor Alarm light wire from TB1-20 and reconnect it to TB1-26. Connect the incoming +12VDC from the batteries to TB1-28. Remove the white Outdoor Alarm light from TB1-10 and reconnect it to TB1-32. Connect the incoming 12VDC ground to TB1-32. Replace the 120VAC Outdoor Alarm light with a DC voltage model.

Use Non-latching K3 Relay. If the gas detecting system is used to disable or shutdown the E/G as outlined in steps b or c above, the normally closed K3 latching relay contacts 1/5 must be used. Do not use the normally closed contacts 6/2 of the non-latching K1 relay. If the non-latching K1 relay contacts 6/2 are used and the gas detector alarms while the engine is supplying the facility load, then the engine will cycle on and off until commercial power is restored. That is, the gas detector alarms and shuts down the engine. However, since commercial power and E/G power are not available, the entire gas detector system is de-energized and the K1 non-latching relay contacts 1/5 reset to the closed position. With the K1 relay contacts 1/5 closed, the engine will restart. Once the E/G comes up to speed and takes the facility load, the gas detection system is powered back up. With power back to the gas detector system, it re-alarms after a one-minute warm-up period and once again shuts down the E/G. This process repeats itself until commercial power is restored.

REV LTR	DATE	DESCRIPTION	CHECKED	APPROVED

FEDERAL AVIATION ADMINISTRATION
MIKE MONRONEY AERONAUTICAL CENTER OKLAHOMA CITY, OKLAHOMA 73125

Combustible Gas Detector
Drawing Notes

REVIEWED BY	DATE REVIEWED	SUBMITTED BY		APPROVED BY	
TLR	05-20-03	Tim Riley		John Dietrich	
		DRAWN BY Ron Perkins	DATE: 06-05-03 ISSUED BY AOS-220	PROJECT NO. 221-1999D109A	REV LTR
		CHKED BY Tim Riley	SHEET 10 OF 10	DRAWING NO. AE-B-1714-10	
		Scale None			