Design and Product Drawings

for the

ASR-9 Sustainment

External Modifications

Contract No. DTFAWA-04-C-00067

CDRL Sequence No. F03

Revision C

23 January 2006

Prepared for:

Federal Aviation Administration
ATO-T

Prepared by:

Northrop Grumman Systems Corporation
Electronic Systems
Baltimore, Maryland 21203

CHANGE RECORD
For CDRL F03 – Design and Product Drawings

REVISION LEVEL	CHANGE DATE	PAGES CHANGED	REASON FOR CHANGE
-	21 January 2005	All	Original Submittal
A	16 May 2005	All	Update required 60 days after CDR
B	15 December 2005	All	Update to accepted design
C	23 January 2006	All	Update per agreement w/FAA to clarify format and compatibility issues

1 Identification

The Design and Product Drawings, Contract Data Requirements List (CDRL) F03 is a collection of drawings that document the Antenna Reinforcement Modification developed under contract DTFAWA01-04-C-00067 CLIN 002 for the External Components Modification Kit.

2 Overview

The purpose of the Design and Product Drawings is to supply engineering data in the form of product drawings and associated lists to support training and second level engineering maintenance for items interchangeable with the original items.

3 Design and Product Drawings Overview

The Antenna Reinforcement Modification Drawings capture the information used by Northrop Grumman to fabricate the Antenna Reinforcement Kit. This information is provided in electronic format, in accordance with attachment J of the contract. Product drawings and associated lists provide design disclosure information and reflect the end product at its current level of design maturity.

This submittal, rev C, is a clarification of the final submittal below in agreement with the FAA in regard to format and clarification issues.

The initial submittal, due 30 days prior to the Critical Design Review (CDR), was submitted on January 21, 2005 and provided the preliminary drawings and associated list at a level of maturity appropriate for the upcoming CDR. In the initial submittal, the drawings were provided in Power Point Format and the lists were provided in Excel format.

The second submittal , due 60 days after CDR, updates the drawing package and reflects the CDR updates with drawings formatted as .DWG files compatible with AUTOCAD 2004 of all parts and/or assemblies and parts lists are provided in .xls format.

The final submittal is due 30 days after delivery and acceptance of the 60 antenna reinforcement kits. The final delivery includes:

1. Manufacturing drawings of all sheet metal pieces.

2. All parameters required to define each unit, assembly, subassembly, part or material shall be presented on the applicable drawing. This includes data such as:

    a. All necessary mechanical dimensions to fully define fabrication, acceptance, interface or installation of the item depicted.
    b. All other necessary physical parameters to fully define fabrication, acceptance, interface or installation of the item depicted, i.e. weight, pressure, viscosity, etc.
    c. All necessary environmental conditions which units, assemblies, subassemblies, parts and materials must meet to perform effectively in the end item, such that the end item will meet its specification requirements.

This paragraph provides an explanation of some of items found on the drawings. The CAGE codes on the drawings are for specific Commercial And Government Entities (CAGE). The addresses and phone numbers for these entities can be found several places on the internet. One place is http://www.dlis.dla.mil/cage_welcome.asp. Use of the internet insures that the information obtained is the most current available. One of the CAGE references shown is 79500. All inquiries concerning this CAGE should be directed to CAGE 97942, Northrop Grumman Corporation. Drawings with this CAGE should be understood to have the following note above the title block on page one: The current design activity is the Northrop Grumman Corporation CAGE 97942 Baltimore Maryland 21203.

The following is a list of acronyms found on the drawings with their meaning.

ALT	Alternate An acceptable alternate item
AR	As Required Used for an indefinite positive quantity such as paint
CAGE	Commercial and government entity code. See above.
EA	Each
EQA	Equivalent alternate item. Not identical in some aspect.
NO.	Number
PL	Parts List
QTY	Quantity
U M	Unit of Measure

A separate file is also included for a listing of material and process specifications. These specifications generally are called out on more than one drawing. If a line item on a parts list has an entry in the external identification column which calls out a government or nationally recognized standards group the Northrop Grumman specification for that item is not provided.

Table I provides the top down index that lists the drawings in the system order depicted on the Engineering Drawing Tree (CDRL B08A). There are four columns on this index. The first column, labelled *Drawing Level* identifies the hierarchy level of each drawing. For example, a level 3 indicates that this drawing goes into the assembly of the prior level 2 drawing listed on the index. The second column, labelled *Procuring Activity Control Number*, is the list of drawing numbers. These numbers identify the major documents that are depicted on the Engineering Drawing Tree. The third column provides a brief description of the drawing. The forth column, labelled *Deliverable Document Type/ Format*, identifies the document formats on the electronic media.

Table I Design and Product Drawing Index

Drawing Level	***Procuring Activity Control Number***	***Brief Description***	***Deliverable Document Type/Format***
1	130K080	Reflector Base Reinforcement Assembly	Graphics - .DWG Parts List - .xls
2	130K081	Hardware Kit	Parts List - .xls
2	130K082	Bracket Kit	Parts List - .xls
3	130K083	Upper Side Base Support	Graphics - .DWG Parts List - .xls
3	130K084	Upper Front/Rear Base Support	Graphics - .DWG Parts List - .xls
3	130K088	SHIM, Reflector Base	Graphics - .DWG Parts List - .xls
3	130K092	Upper Side Front Base Support	Graphics - .DWG Parts List - .xls
3	135K915	Lower Outside Rear Base Support	Graphics - .DWG Parts List - .xls
3	135K916	Lower Outside Front Base Support	Graphics - .DWG Parts List - .xls
3	135K917	Lower Inside Front Base Support	Graphics - .DWG Parts List - .xls
3	135K918	Lower Rear Interior Base Support	Graphics – DWG Parts List - .xls
3	135K919	Lower Rear Base Support	Graphics – DWG Parts List - .xls
3	135K920	Lower Rear Base Support	Graphics - .DWG Parts List - .xls
3	135K921	Lower Front Exterior Base Support	Graphics - .DWG Parts List - .xls
3	135K922	Lower Rear Inside Corner Base Support	Graphics - .DWG Parts List - .xls

SHEET REVISION STATUS						
8	5	4	3	2	1	SHEET NO.
–	–	A	A	A	B	REV

REVISIONS				
ZONE	REV	DESCRIPTION	DATE	APPROVED
	–	DRAWING RELEASED	03-06-12	J.WELLER
	A	SEE REV HISTORY 23	03-07-11	R.CRUMBACKER
	B	SEE REV HISTORY	03-08-10	R.CRUMBACKER

1 (2005066)

(1) TRANSFER AND PREPARE HOLE OR LOCATE PER DIMENSIONS AND PREPARE HOLE PER FN 100. TOLERANCE ON DIMENSIONS IS NON-CUMULATIVE. TOUCH UP CHROMATE PER FN 101. MIX SEALANT FN 106 PER MANUFACURER'S INSTRUCTIONS. AFTER APPLYING SEALANT FN 106 TO THE HOLE AND COATING THE SLEEVE AND UNDERSIDE OF THE HEAD OF THE RIVET WITH SEALANT FN 106, INSTALL THE RIVET PER FN 100 WHILE STILL WET.

(2) TORQUE TO 504 IN-LB (42 FT-LB). LUBRICATE THE THREADS AND COAT THE SHANK OF THE BOLT USING FN 105 BEFORE ASSEMBLY.

(3) THIS REFLECTOR BASE REINFORCEMENT ASSY IS DESIGNED FOR AN ASR-9 ANTENNA. IT CAN ALSO BE USED ON AN ASR-12 ANTENNA IF THE GRIP LENGTHS OF THE INDICATED RIVETS ARE ADJUSTED.

ENLARGE BOLT HOLE IN FN 3 AND FN 4 TO ø .453 +.005/-.002. TOUCH UP CHROMATE PER FN 101.

(4) COUNTERBORE EACH BOLT LOCATION PER DIMENSIONS SHOWN. TOUCH UP CHROMATE PER FN 101. BEFORE INSTALLING SHIM FN 29, MIX SEALANT FN 106 PER MANUFACURER'S INSTRUCTIONS AND APPLY A .005 - .020 IN. THICK COATING OF SEALANT

(5) TO THE FAYING SURFACES OF THE SHIM AND TO THE SURFACES OF THE COUNTERBORE, BUT NOT TO THE BOLT HOLE. EXCESS SEALANT IS EXPECTED TO SQUEEZE OUT OF THE JOINT WHEN BOLTS ARE TORQUED. INSTALL SHIM TO OBTAIN A NOMINAL THICKNESS OF .500 FOR THE COMBINED SHIM AND CAST FLANGE. IF THE ALTERNATE SHIM (130K088H01) IS USED, VERIFY ITS THICKNESS BEFORE INSTALLING IT. FOR EACH GROUP OF FOUR SHIMS USED TO INSTALL A SET OF UPPER AND LOWER BASE SUPPORTS, THE GROUP OF FOUR SHIMS SHALL BE THE SAME NOMINAL THICKNESS WITHIN ±.003. IF NOT, PEEL THE SHIMS UNTIL THEY MATCH THE TOLERANCE, BUT DO NOT PEEL THE SHIMS TO LESS THAN .164 THICK.

MARK PER FN 107, APPROXIMATELY AS SHOWN. MARK SERIAL NUMBER OBTAINED FROM ORIGINAL MARKING ON FN 4 IN THE SPACE PROVIDED AFTER "SERIAL". MARK AND TRANSFER THE SERIAL NUMBER PRIOR TO INSTALLING FN 28 SINCE IT COVERS THE ORIGINAL MARKING ON FN 4.

REMOVE MATERIAL FROM THE CASTING BOSSES ON THE REFLECTOR BASES OF FN 4 BY SPOTFACING THE BOLT HOLES PER DIMENSIONS SHOWN. TOUCH UP CHROMATE PER FN 101. PAINT SPOTFACED SURFACES PER FN 103 USING FN 104. MASK BOLT HOLES FROM PAINT.

(7) REMOVE FOUR ALIGNMENT PINS (FN 7) FROM ORIGINAL LOCATION IN FN 3. BAG AND TAG PINS AND HARDWARE PER FN 107. LOCATE FOUR ø.297 +.005/-.002 HOLES PER DIMENSIONS SHOWN AND TRANSFER THE HOLES THRUDUGH FN 4 AND INTO FN 3. TOUCH UP CHROMATE PER FN 101. WHEN AND IF THE ANTENNA IS DISASSEMBLED IN THE FUTURE, SUCH THAT FN 4 IS REMOVED FROM FN 3, THE FAA

(8) SHALL COMPLETE THE RE-INSTALLATION OF THE ALIGNMENT PINS AS FOLLOWS:

OPEN THE TWO REAR HOLES IN FN 4 TO ø.377 $^{+.002}_{-.000}$.

OPEN THE TWO FRONT HOLES IN FN 4 TO ø.380 $^{+.002}_{-.000}$.

OPEN THE HOLES IN FN 3 TO ø.3125 $^{+.0003}_{-.0002}$.

TOUCH UP CHROMATE PER FN 101. ASSEMBLE FN 7 TO FN 3 WITH HARDWARE AS SHOWN.

IF BOTTOM OF LADDER (FN 8) INTERFERES WITH FN 27, SHORTEN SIDE OF LADDER BY CUTTING OFF .50 IN. OF IT. MIX SEALANT FN 106 PER MANUFACTURER'S INSTRUCTIONS AND APPLY IT TO THE EXPOSED SUFACE. EXTEND COATING .38 ±.12 IN. BEYOND MACHINED EDGE.

(9)

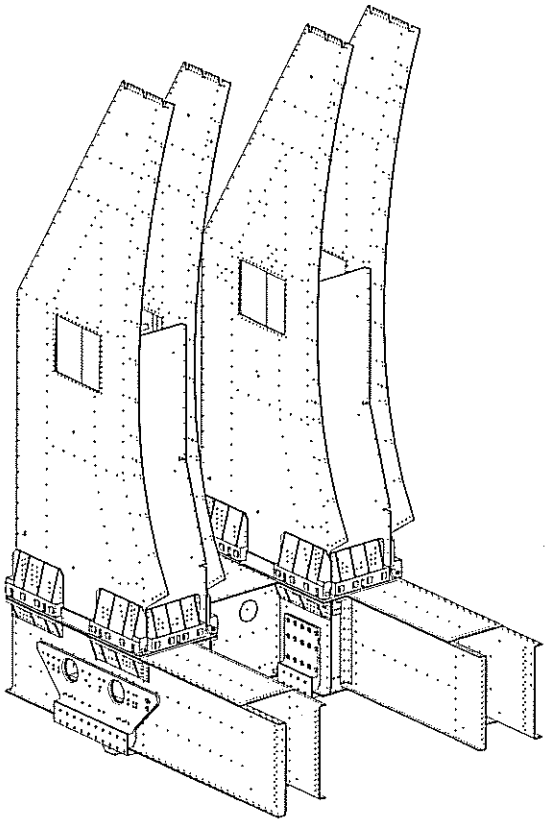

THIS VIEW FOR REFERENCE ONLY

SERIALIZED ASSEMBLY

SEE SEPARATE PARTS LIST

COMPUTER GENERATED DOCUMENT
MANUAL CHANGES NOT ALLOWED

DESIGN: N MOORE	WELDING: ----------		
TECHNOLOGIST: ----------	ENGINEER: L WEITZMANN		
PROJ ENG: A ROBSON	DESIGNER: ----------	SEE PL NEXT ASSY	SEE PL USED ON
QUALITY: L TURNER	MANUFACTURING: M HICKOS	APPLICATION	

INTERPRET DIMENSIONS AND TOLERANCES IN ACCORDANCE WITH ANSI Y14.5M-1982 UNLESS OTHERWISE SPECIFIED DIMENSIONS ARE IN INCHES DO NOT SCALE TOLERANCES ON: 2 PLACE ±.06 | 3 PLACE ±.010 | ANGLES ±0°0'

SIMILAR TO 130K031

INTERPRET DRAWING AND (631-570-1120)

CODE IDENT NO. DTFAAA-04-C-00087

ORIGINAL DATE 03-04-28

DRAFTER M.VANSCOY | WEIGHT ENGR G.KEMPE

CHECKER J.LOK | TOOLING ENGR ------

OPTIC SUPP J.WELLER | DESIGN MGT M.PLEY

CUSTOMER ----------

NORTHROP GRUMMAN CORPORATION
BALTIMORE, MARYLAND 21202

REFLECTOR BASE REINFORCEMENT ASSEMBLY

SIZE D | CAGE CODE 97942 | DWG NO. 130K080

SCALE NONE | WEIGHT | SHEET 1 OF 6

UG

COMPUTER GENERATED DOCUMENT
MANUAL CHANGES NOT ALLOWED

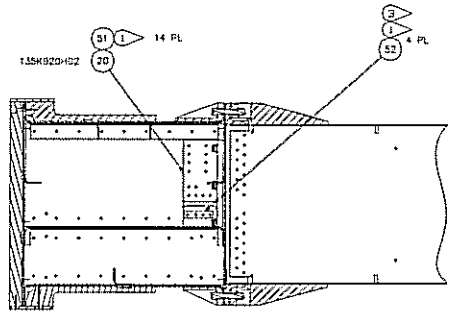

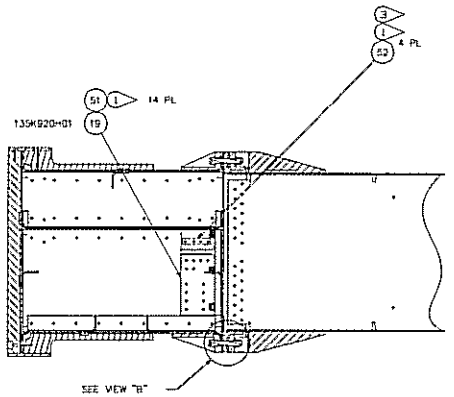

SECTION A—A

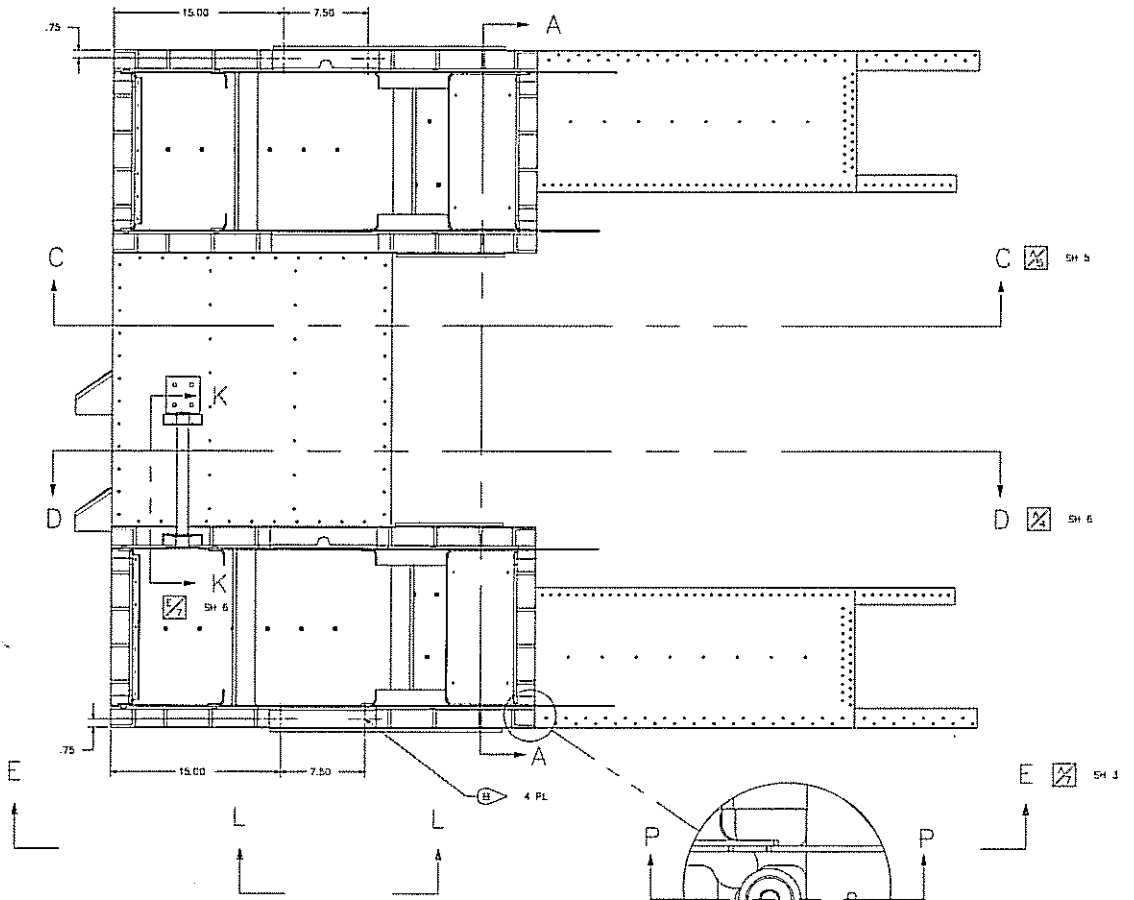

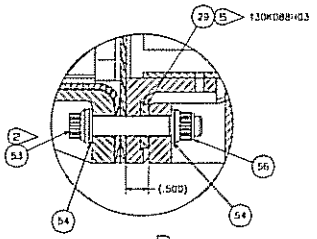

VIEW B
SCALE 1/1

TYPICAL INSTALLATION
40 PLACES

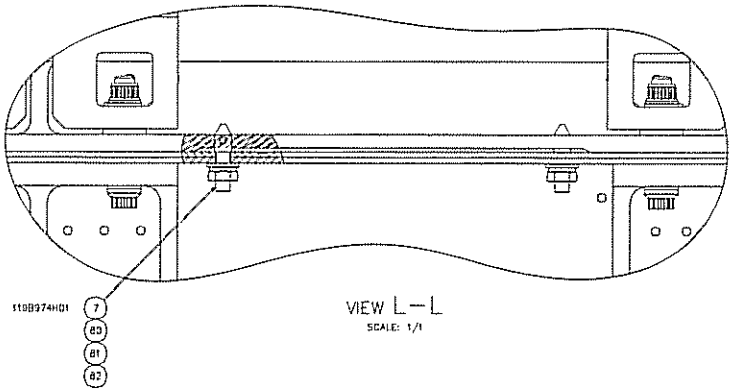

VIEW L—L
SCALE: 1/1

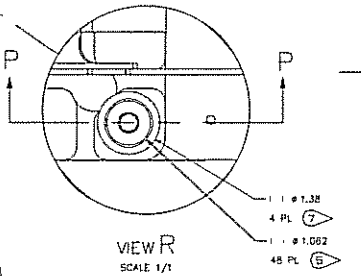

VIEW R
SCALE 1/1
FN 31 AND HARDWARE OMITTED
FROM VIEW FOR CLARITY

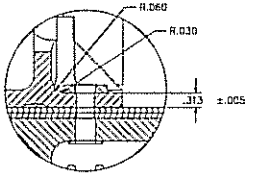

SECTION P—P

SIZE	CAGE CODE	DWG NO.
B	97942	1304080
SCALE 1/4	REV A	SHEET 2

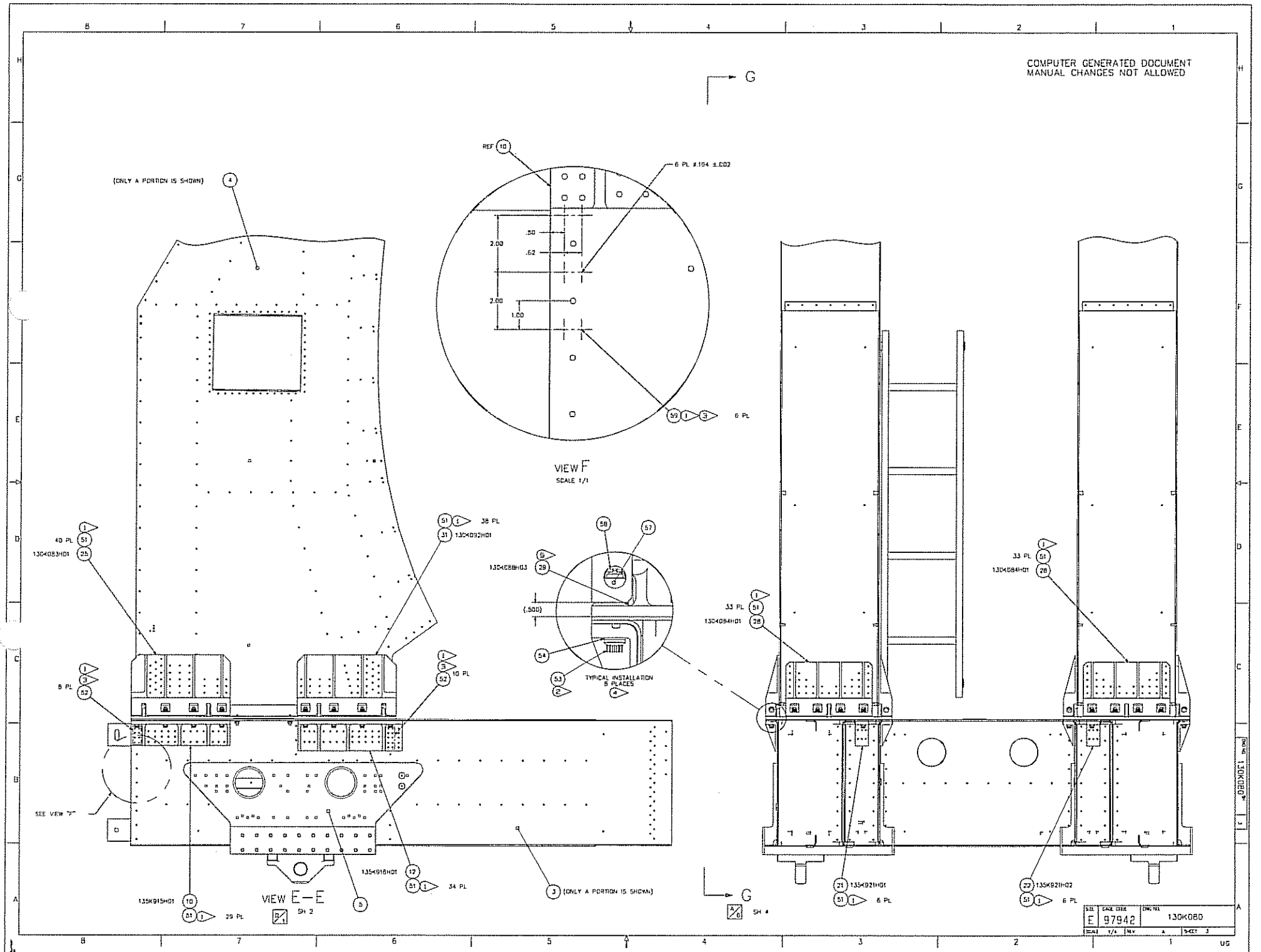
COMPUTER GENERATED DOCUMENT
MANUAL CHANGES NOT ALLOWED
G
(ONLY A PORTION IS SHOWN)
REF
6 PL #.104 ±.002
.50
.62
2.00
2.00
1.00
6 PL
VIEW F
SCALE 1/1
38 PL
130K092H01
40 PL
130K083H01
6 PL
10 PL
SEE VIEW "F"
135K915H01
29 PL
VIEW E-E
SH 2
135K916H01
34 PL
(ONLY A PORTION IS SHOWN)
130K088H03
(.500)
TYPICAL INSTALLATION
6 PLACES
33 PL
130K084H01
33 PL
130K084H01
135K921H01
6 PL
135K921H02
6 PL
G
SH 4
SIZE E
CAGE CODE 97942
DWG NO. 130K080
SCALE 1/4
SHEET 3
130K080

COMPUTER GENERATED DOCUMENT
MANUAL CHANGES NOT ALLOWED

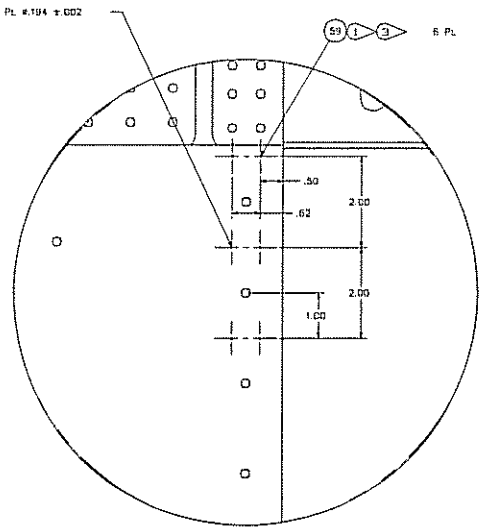

VIEW H
SCALE 1/1

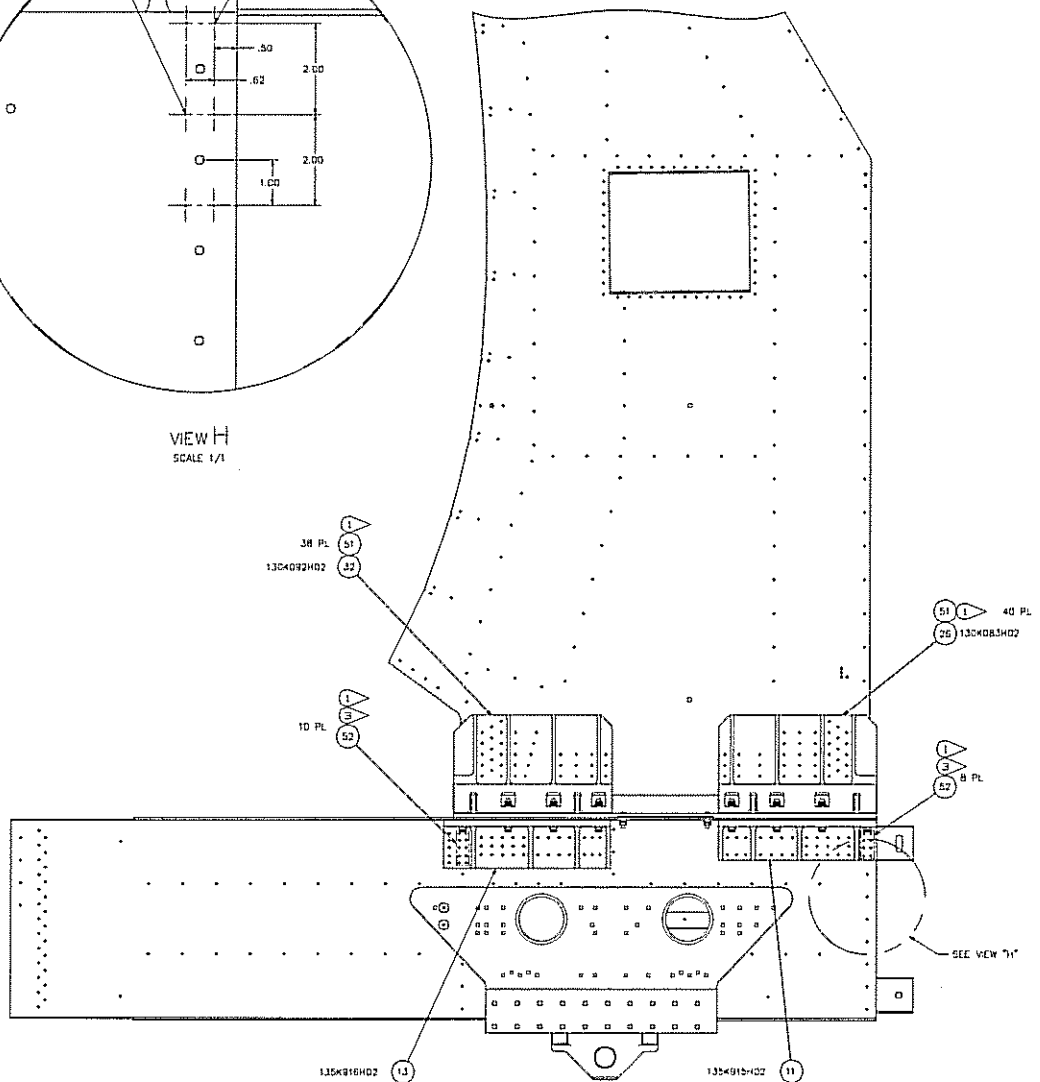

VIEW G–G
SH 3

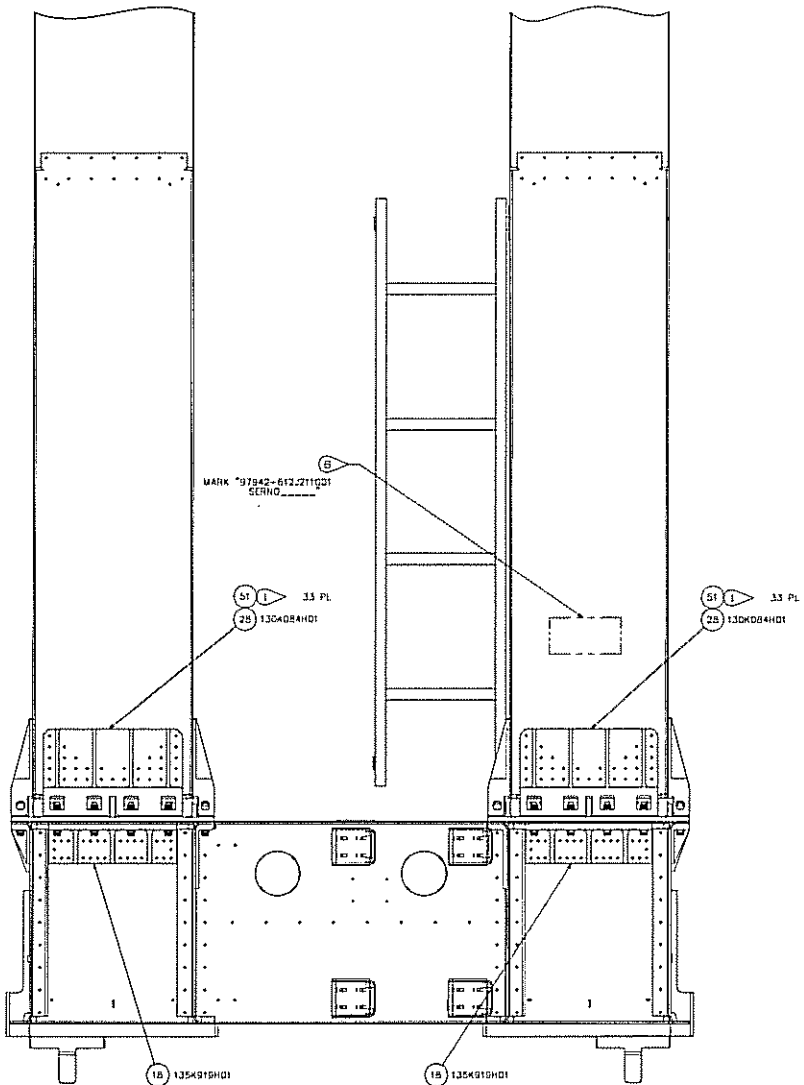

SIZE	CAGE CODE	DWG NO
E	97942	13K080
SCALE 1/4	REV A	SHEET 4

UG

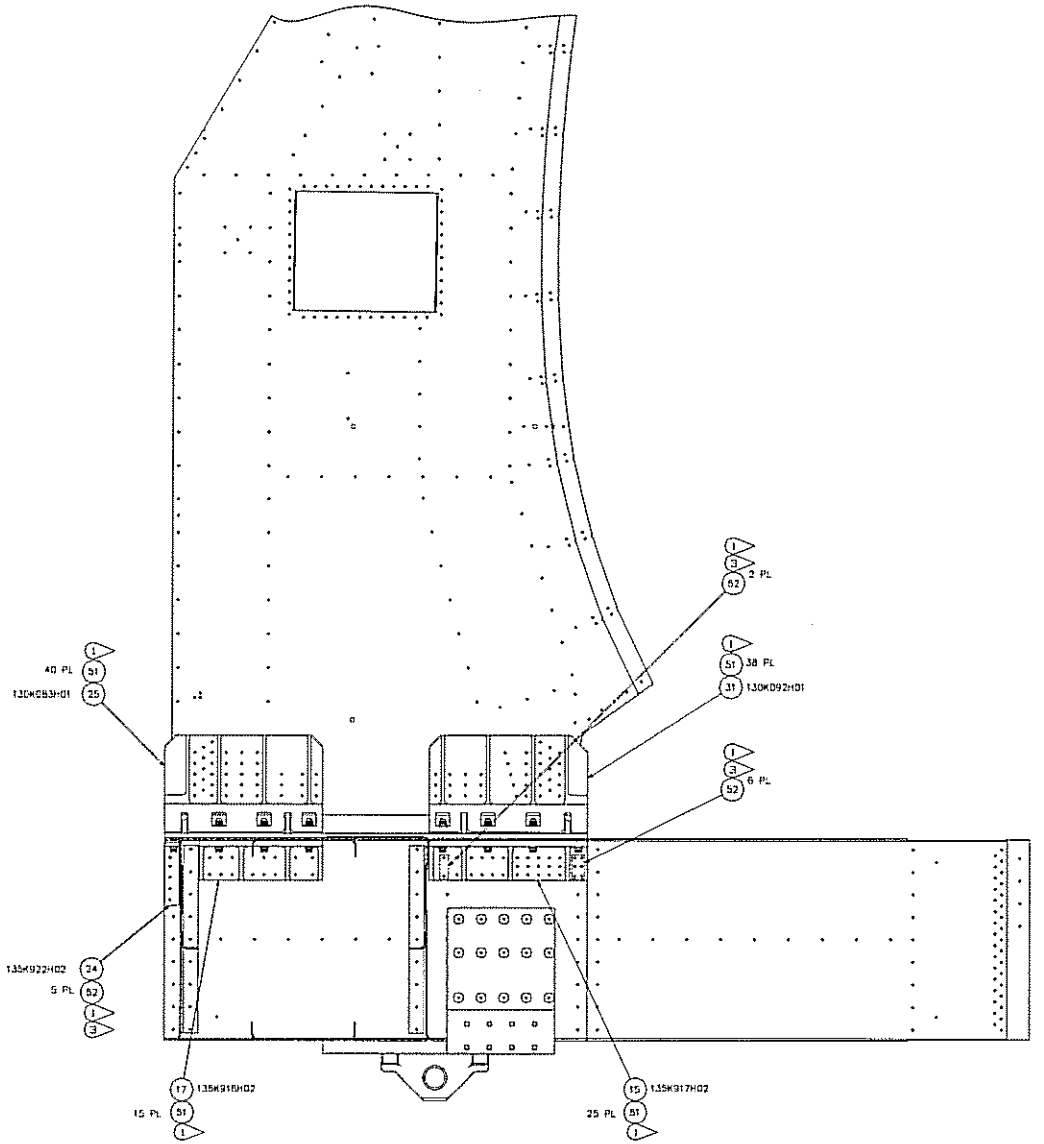

SECTION C—C

SH 2

COMPUTER GENERATED DOCUMENT
MANUAL CHANGES NOT ALLOWED

SIZE	CAGE CODE	DWG NO.
B	97942	130K080
SCALE 1/4	REV -	SHEET 5

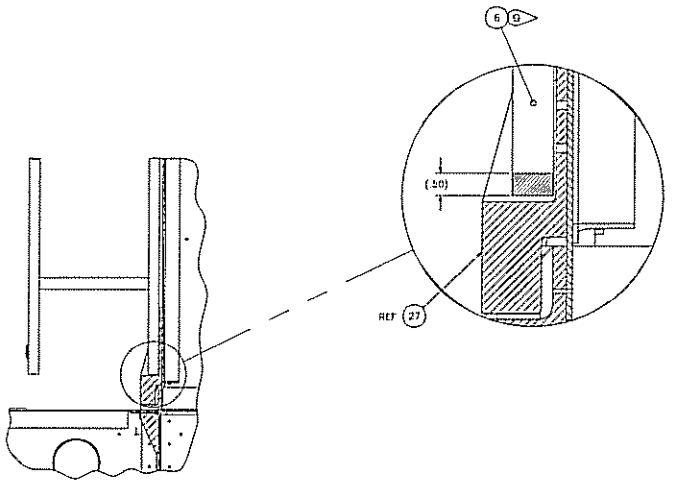

SECTION K–K

SH 2

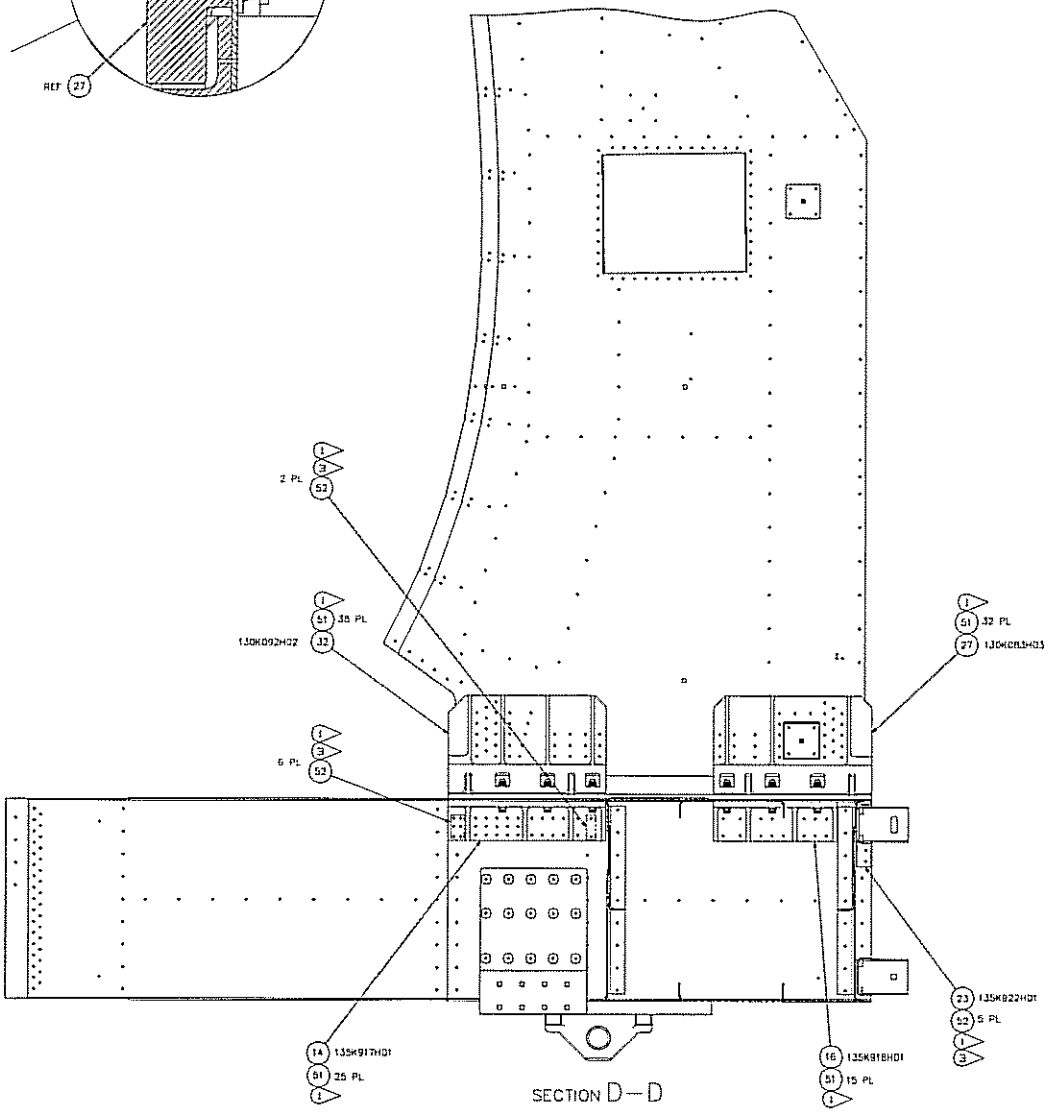

SECTION D–D

SH 2

FN 6 OMITTED FROM VIEW FOR CLARITY

COMPUTER GENERATED DOCUMENT
MANUAL CHANGES NOT ALLOWED

SIZE	CAGE CODE	DWG NO	
E	97942	130K080	
SCALE 1/4	REV –	SHEET 8	

DWG NO 130K080

DOC NO: 130K080, REV: B, TITLE: REFLECTOR BASE REINFORCEMENT ASSEMBLY

ASSEMBLY NO.	FIND NO.	ALT/EQV	QTY	U M	CAGE CODE	PART OR IDENTIFYIN	NOMENCLATURE OR DESCRIPTION	REF DESIGNATORS	NOTE DESCRIPTION	EXTERNAL IDENTIFICATION	PL
130K080G01	001		1	EA	97942	130K081G01	HARDWARE KIT, REFLECTOR BASE REINFORCEMENT				X
130K080G01	002		1	EA	97942	130K082G01	BRACKET KIT, REFLECTOR BASE REINFORCEMENT				X
130K080G01	003		REF		97942	612J204G01	ROTATING BEAM ASSY				X
130K080G01	004		REF		97942	612J211G01	REFLECTOR ASSY				X
130K080G01	005		REF		97942	7D15580G01	MODIFICATION KIT ASSEMBLY				X
130K080G01	006		REF		97942	1D22764G01	LADDER ASSY, MIDDLE				X
130K080G01	007		REF		97942	119B974H01	PIN				X
130K080G01	010		REF		97942	135K915H01	BASE SUPPORT, REFLECTOR ASSY, LOWER OUTSIDE REAR				X
130K080G01	011		REF		97942	135K915H02	BASE SUPPORT, REFLECTOR ASSY, LOWER OUTSIDE REAR				X
130K080G01	012		REF		97942	135K916H01	BASE SUPPORT, REFLECTOR ASSY, LOWER OUTSIDE FRONT				X
130K080G01	013		REF		97942	135K916H02	BASE SUPPORT, REFLECTOR ASSY, LOWER OUTSIDE FRONT				X
130K080G01	014		REF		97942	135K917H01	BASE SUPPORT, REFLECTOR ASSY, LOWER INSIDE FRONT				X
130K080G01	015		REF		97942	135K917H02	BASE SUPPORT, REFLECTOR ASSY, LOWER INSIDE FRONT				X
130K080G01	016		REF		97942	135K918H01	BASE SUPPORT, REFLECTOR ASSY, LOWER REAR INTERIOR				X
130K080G01	017		REF		97942	135K918H02	BASE SUPPORT, REFLECTOR ASSY, LOWER REAR INTERIOR				X
130K080G01	018		REF		97942	135K919H01	BASE SUPPORT, REFLECTOR ASSY, LOWER REAR				X
130K080G01	019		REF		97942	135K920H01	BASE SUPPORT, REFLECTOR ASSY, LOWER REAR				X
130K080G01	020		REF		97942	135K920H02	BASE SUPPORT, REFLECTOR ASSY, LOWER REAR				X
130K080G01	021		REF		97942	135K921H01	BASE SUPPORT, REFLECTOR ASSY, LOWER FRONT EXTERIOR				X
130K080G01	022		REF		97942	135K921H02	BASE SUPPORT, REFLECTOR ASSY, LOWER FRONT EXTERIOR				X
130K080G01	023		REF		97942	135K922H01	BASE SUPPORT, REFLECTOR ASSY, LOWER REAR INSIDE CORNER				X
130K080G01	024		REF		97942	135K922H02	BASE SUPPORT, REFLECTOR ASSY, LOWER REAR INSIDE CORNER				X
130K080G01	025		REF		97942	130K083H01	BASE SUPPORT, REFLECTOR ASSY, UPPER SIDE, REAR				X
130K080G01	026		REF		97942	130K083H02	BASE SUPPORT, REFLECTOR ASSY, UPPER SIDE, REAR				X
130K080G01	027		REF		97942	130K083H03	BASE SUPPORT, REFLECTOR ASSY, UPPER SIDE, REAR				X
130K080G01	028		REF		97942	130K084H01	BASE SUPPORT, REFLECTOR ASSY, UPPER FRONT/ REAR				X
130K080G01	029		REF		97942	130K088H03	SHIM, REFLECTOR BASE THICKNESS				X
130K080G01	029	ALT			97942	130K088H01	SHIM, REFLECTOR BASE THICKNESS				X
130K080G01	031		REF		97942	130K092H01	BASE SUPPORT, REFLECTOR ASSY, UPPER SIDE, FRONT				X
130K080G01	032		REF		97942	130K092H02	BASE SUPPORT, REFLECTOR ASSY, UPPER SIDE, FRONT				X
130K080G01	051		REF		80205	NAS1398C6AB6	RIVET,BLIND,PROTR HD, LCK SPINDLE,.190DIAX.537,CRES			NAS1398	
130K080G01	051	ALT			05693	CR4623D-6-06	RIVET, BLIND, STRUCT, UNIVER HD, .187 DIA X .375, A286				
130K080G01	052		REF		80205	NAS1398C6AB9	RIVET,BLIND,PROTR HD, LCK SPINDLE,.190DIAX.725,CRES			NAS1398	
130K080G01	052	ALT			05693	CR4623D-6-09	RIVET, BLIND, STRUCT, UNIVER HD, .187 DIA X .562, A286				
130K080G01	053		REF		80205	MS21250-07028	BOLT, TENSION, 12 PT, .4375-20UNF X 2.491, AL STL, CAD			NASM21250	

DOC NO: 130K080, REV: B, TITLE: REFLECTOR BASE REINFORCEMENT ASSEMBLY

ASSEMBLY NO.	FIND NO.	ALT/EQV	QTY	U M	CAGE CODE	PART OR IDENTIFYIN	NOMENCLATURE OR DESCRIPTION	REF DESIGNATORS	NOTE DESCRIPTION	EXTERNAL IDENTIFICATION	PL
130K080G01	054		REF		80205	NAS1149C0763R	WASHER,FLAT,CRES, .453 ID X .750 OD X .063 THK, PASS			NAS1149	
130K080G01	054	ALT			88044	AN960C716	WASHER, FLAT, (.453 DIA)			AN960	
130K080G01	056		REF		80205	NAS1804-7	NUT,SLF LCK,DBL HEX, .438-20UNJF-3BX.436,ALLOY STL,CAD			NAS1804	
130K080G01	057		REF		80205	NAS577B7A	NUT,SELF-LCK,BARREL,FLOAT, .437-20 UNJF-3BX.625,STL,CAD			NAS577	
130K080G01	058		REF		80205	NAS578-7A	RETAINER, FOR BARREL NUT NAS577B7A, STEEL, CAD			NAS578	
130K080G01	059		REF		80205	NAS1398C6AB5	RIVET,BLIND,PROTR HD, LCK SPINDLE,.190DIAX.475,CRES			NAS1398	
130K080G01	059	ALT			05693	CR4623D-6-05	RIVET, BLIND, STRUCT, UNIVER HD, .187 DIA X .312, A286				
130K080G01	060		REF		80205	MS15795-812	WASHER, FLAT, .344 ID, .688 OD, CRES, PASSIVATE			NASM15795	
130K080G01	061		REF		80205	MS35338-140	WASHER, LOCK-SPRING, (.312)#5/16 ID, .583 OD, CRES, PASSIVATE			NASM35338	
130K080G01	062		REF		80205	MS35650-3314	NUT, HEX, (.312)#5/16-24, CRES, PASSIVATE			NASM35650	
130K080G01	100		REF		97942	397R076	RIVET,BLIND, INSTALLATION OF				
130K080G01	101		REF		79500	83125BB	CHEMICAL CONVERSION COATING				
130K080G01	102		AR		97942	32240DH	PRIMER, ZINC CHROMATE			TYPE I, CLASS C, COLOR Y (TTP1757-1CY)	
130K080G01	103		REF		97942	PS83660PA	PAINT AND PRIMER, APPLICATION OF				
130K080G01	104		AR		97942	32235EK	ENAMEL, ALKYD, ORN			MIL-C-22750 TYPE 1 COLOR 12197	
130K080G01	105		AR		79500	53701WS	COMPOUND, ANTI-SEIZE				
130K080G01	106		AR		97942	53352CS	SEALANT, CORROSION INHIBITANT				
130K080G01	107		AR		97942	83869NB/4	MARKING, INK AND LABEL				

Notes:

Unless otherwise noted, all dimensions are in inches.

An X in the PL column indicates the existence of a separate parts list for the drawing identified in the "Part or Identifying Number" column. This information is provided for reference only

DOC NO: 130K081, REV: A, TITLE: HARDWARE KIT, REFLECTOR BASE REINFORCEMENT

ASSEMBLY NO.	FIND NO.	ALT/EQV	QTY	U M	CAGE CODE	PART OR IDENTIFYING NUMBER	NOMENCLATURE OR DESCRIPTION	REF DESIGNATORS	NOTE DESCRIPTION	EXTERNAL IDENTIFICATION	PL
130K081G01	051		742	EA	80205	NAS1398C6AB6	RIVET,BLIND,PROTR HD, LCK SPINDLE,.190DIAX.537,CRES			NAS1398	
130K081G01	051	ALT			05693	CR4623D-6-06	RIVET, BLIND, STRUCT, UNIVER HD, .187 DIA X .375, A286				
130K081G01	052		72	EA	80205	NAS1398C6AB9	RIVET,BLIND,PROTR HD, LCK SPINDLE,.190DIAX.725,CRES			NAS1398	
130K081G01	052	ALT			05693	CR4623D-6-09	RIVET, BLIND, STRUCT, UNIVER HD, .187 DIA X .562, A286				
130K081G01	053		48	EA	80205	MS21250-07028	BOLT, TENSION, 12 PT, .4375-20UNF X 2.491, AL STL, CAD			NASM21250	
130K081G01	054		100	EA	80205	NAS1149C0763R	WASHER,FLAT,CRES, .453 ID X .750 OD X .063 THK, PASS			NAS1149	
130K081G01	054	ALT			88044	AN960C716	WASHER, FLAT, (.453 DIA)			AN960	
130K081G01	056		40	EA	80205	NAS1804-7	NUT,SLF LCK,DBL HEX, .438-20UNJF-3BX.438,ALLOY STL,CAD			NAS1804	
130K081G01	057		8	EA	80205	NAS577B7A	NUT,SELF-LCK,BARREL,FLOAT, .437-20 UNJF-3BX.625,STL,CAD			NAS577	
130K081G01	058		8	EA	80205	NAS578-7A	RETAINER, FOR BARREL NUT NAS577B7A, STEEL, CAD			NAS578	
130K081G01	059		12	EA	80205	NAS1398C6AB5	RIVET,BLIND,PROTR HD, LCK SPINDLE,.190DIAX.475,CRES			NAS1398	
130K081G01	059	ALT			05693	CR4623D-6-05	RIVET, BLIND, STRUCT, UNIVER HD, .187 DIA X .312, A286				

Notes:
Unless otherwise noted, all dimensions are in inches.
An X in the PL column indicates the existence of a separate parts list for the drawing identified in the "Part or Identifying Number" column. This information is provided for reference only

DOC NO: 130K082, REV: A, TITLE: BRACKET KIT, REFLECTOR BASE REINFORCEMENT

ASSEMBLY NO.	FIND NO.	ALT/EQV	QTY	U M	CAGE CODE	PART OR IDENTIFYING NUMBER	NOMENCLATURE OR DESCRIPTION	REF DESIGNATORS	NOTE DESCRIPTION	EXTERNAL IDENTIFICATION	PL
130K082G01	010		1	EA	97942	135K915H01	BASE SUPPORT, REFLECTOR ASSY, LOWER OUTSIDE REAR				X
130K082G01	011		1	EA	97942	135K915H02	BASE SUPPORT, REFLECTOR ASSY, LOWER OUTSIDE REAR				X
130K082G01	012		1	EA	97942	135K916H01	BASE SUPPORT, REFLECTOR ASSY, LOWER OUTSIDE FRONT				X
130K082G01	013		1	EA	97942	135K916H02	BASE SUPPORT, REFLECTOR ASSY, LOWER OUTSIDE FRONT				X
130K082G01	014		1	EA	97942	135K917H01	BASE SUPPORT, REFLECTOR ASSY, LOWER INSIDE FRONT				X
130K082G01	015		1	EA	97942	135K917H02	BASE SUPPORT, REFLECTOR ASSY, LOWER INSIDE FRONT				
130K082G01	016		1	EA	97942	135K918H01	BASE SUPPORT, REFLECTOR ASSY, LOWER REAR INTERIOR				X
130K082G01	017		1	EA	97942	135K918H02	BASE SUPPORT, REFLECTOR ASSY, LOWER REAR INTERIOR				X
130K082G01	018		2	EA	97942	135K919H01	BASE SUPPORT, REFLECTOR ASSY, LOWER REAR				X
130K082G01	019		1	EA	97942	135K920H01	BASE SUPPORT, REFLECTOR ASSY, LOWER REAR				X
130K082G01	020		1	EA	97942	135K920H02	BASE SUPPORT, REFLECTOR ASSY, LOWER REAR				X
130K082G01	021		1	EA	97942	135K921H01	BASE SUPPORT, REFLECTOR ASSY, LOWER FRONT EXTERIOR				X
130K082G01	022		1	EA	97942	135K921H02	BASE SUPPORT, REFLECTOR ASSY, LOWER FRONT EXTERIOR				X
130K082G01	023		1	EA	97942	135K922H01	BASE SUPPORT, REFLECTOR ASSY, LOWER REAR INSIDE CORNER				X
130K082G01	024		1	EA	97942	135K922H02	BASE SUPPORT, REFLECTOR ASSY, LOWER REAR INSIDE CORNER				X
130K082G01	025		2	EA	97942	130K083H01	BASE SUPPORT, REFLECTOR ASSY, UPPER SIDE, REAR				X
130K082G01	026		1	EA	97942	130K083H02	BASE SUPPORT, REFLECTOR ASSY, UPPER SIDE, REAR				X
130K082G01	027		1	EA	97942	130K083H03	BASE SUPPORT, REFLECTOR ASSY, UPPER SIDE, REAR				
130K082G01	028		4	EA	97942	130K084H01	BASE SUPPORT, REFLECTOR ASSY, UPPER FRONT/ REAR				X
130K082G01	029		48	EA	97942	130K088H03	SHIM, REFLECTOR BASE THICKNESS				X
130K082G01	029	ALT			97942	130K088H01	SHIM, REFLECTOR BASE THICKNESS				X
130K082G01	031		2	EA	97942	130K092H01	BASE SUPPORT, REFLECTOR ASSY, UPPER SIDE, FRONT				X
130K082G01	032		2	EA	97942	130K092H02	BASE SUPPORT, REFLECTOR ASSY, UPPER SIDE, FRONT				X

Notes:
Unless otherwise noted, all dimensions are in inches.
An X in the PL column indicates the existence of a separate parts list for the drawing identified in the "Part or Identifying Number" column. This information is provided for reference only

DWG NO.	130K083	SH 1	1 (20DS086)

SHEET REVISION STATUS						
6	5	4	3	2	1	SHEET NO.
B	B	B	C	B	C	REV

REVISIONS

ZONE	REV	DESCRIPTION	DATE	APPROVED
	–	DRAWING RELEASED	05-04-18	J.MOLLER
	A	SEE REV G9D08 JAL/MGS	05-05-26	ROSENBERGER
	B	SEE REV H00W6 TNL/VLB	05-07-11	ROSENBERGER
	C	SEE REV H23P9.01 MEF/MSD	05-08-11	ROSENBERGER

PARENTHETIC IDENTIFIERS ARE FOR REFERENCE ONLY

1 UNLESS OTHERWISE SPECIFIED:

BREAK ALL SHARP CORNERS AND EDGES R.03 MAX OR CHAMFER .03 X .03 MAX.

SURFACE TEXTURE OF MACHINED SURFACES TO BE 125 MICROINCHES MAX.

DIMENSIONAL LIMITS APPLY BEFORE FINISHING.

2 CHROMATE COAT PER FN 100.

3 PAINT PER FN 101 USING FN 102.

(4) MARK PER FN 103 APPROX AS SHOWN.

(5) BREAK FARSIDE EDGE OF HOLE WITH .030 ±.010 <A> .030 ± .010 CHAMFER.

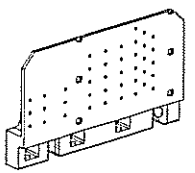

H01

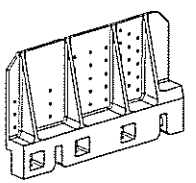

H02

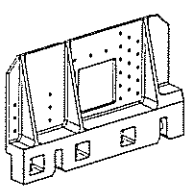

H03

THESE VIEWS FOR REFERENCE ONLY

COMPUTER GENERATED DOCUMENT
MANUAL CHANGES NOT ALLOWED
SEE SEPARATE PARTS LIST

MFG ENGR: W.MOORE	MFG DFM: -----		
QA/SAE/SAFETY: -----	STRUCTURAL: L.HOTZMANN		
MFT LEAD: A.ROBSON	ES SEAR ENG: -----	SEE PL	SEE PL
QUALITY: L.TURNER	ENGR MGT: M.HODGES	NEXT ASSY	USED ON
		APPLICATION	

INTERPRET DIMENSIONS AND TOLERANCES PER ANSI Y14.5M-1982
UNLESS OTHERWISE SPECIFIED DIMENSIONS ARE IN INCHES
DO NOT SCALE

TOLERANCES ON		
2 PLACE	3 PLACE	ANGLES
±.02	±.010	±---

SIMILAR TO: NONE

INTERPRET DRAWING IAW DOD-STD-100

CONTR NO.	DTFAWA-04-C-00067
ORIGINAL DATE	05-02-04
DRAFTER	M.VANSCOY
MECH ENGR	D.KEMPIC
CHECKER	M.VANSCOY
ELEC ENGR	-----
DFTG SUPV	J.MOLLER
DSGN MGT	M.RILEY
CUSTOMER	-----

NORTHROP GRUMMAN CORPORATION
BALTIMORE, MARYLAND 21203

BASE SUPPORT,
REFLECTOR ASSY,
UPPER SIDE, REAR

SIZE	CAGE CODE	DWG NO.
D	97942	130K083

SCALE NONE WEIGHT SHEET 1 OF 6

UG

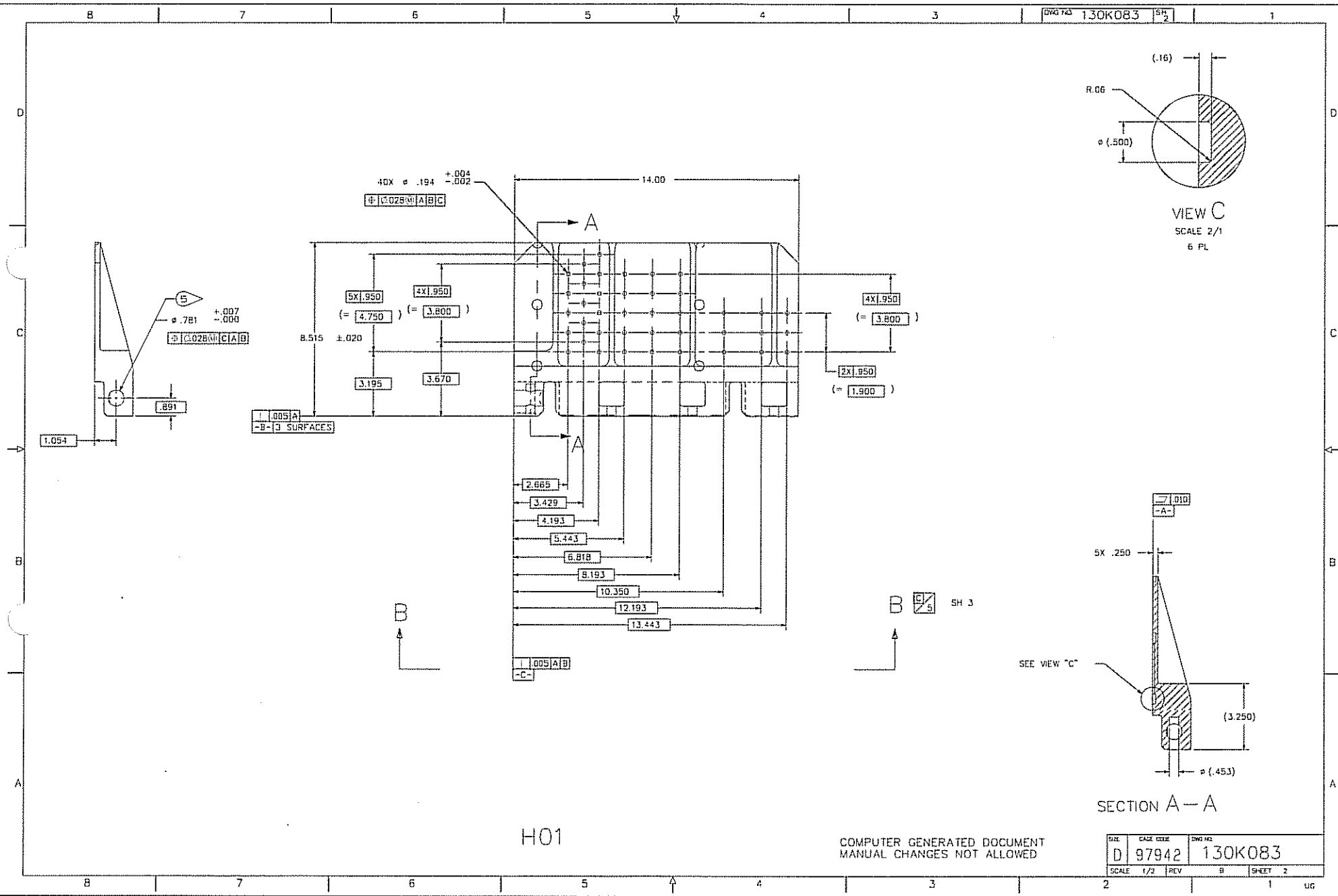
DWG NO 130K083 SH 2
40X ø .194 +.004 -.002
⊕ ⌀.028Ⓜ A B C
14.00
A
5X .950
(= 4.750)
4X .950
(= 3.800)
8.515 ±.020
3.195
3.670
4X .950
(= 3.800)
2X .950
(= 1.900)
.005 A
-B- 3 SURFACES
2.665
3.429
4.193
5.443
6.818
8.193
10.350
12.193
13.443
.005 A B
-C-
B
B
C/5
SH 3
5
ø .781 +.007 -.000
⊕ ⌀.028Ⓜ C A B
.891
1.054
(.16)
R.06
ø (.500)
VIEW C
SCALE 2/1
6 PL
.010
-A-
5X .250
SEE VIEW "C"
(3.250)
ø (.453)
SECTION A—A
H01
COMPUTER GENERATED DOCUMENT
MANUAL CHANGES NOT ALLOWED
SIZE D
CAGE CODE 97942
DWG NO. 130K083
SCALE 1/2
REV B
SHEET 2
UG

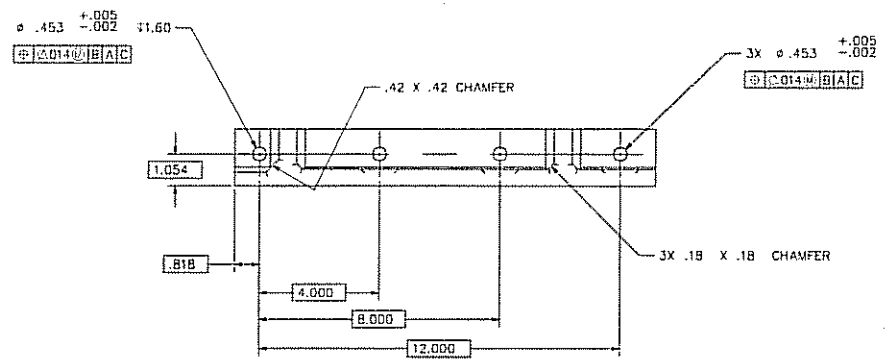

VIEW B-B② SH 2

B
3

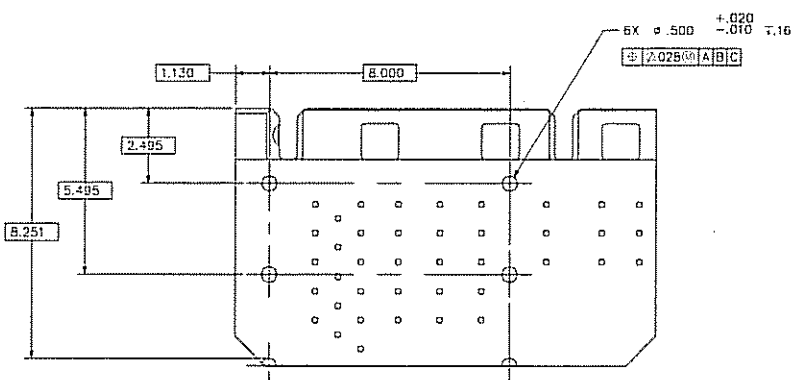

D

D D/5 SH 4

COMPUTER GENERATED DOCUMENT
MANUAL CHANGES NOT ALLOWED

H01

SIZE	CAGE CODE	DWG NO.
D	97942	130K083
SCALE 1/2	REV C	SHEET 3

UG

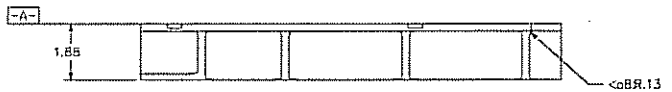

VIEW D-D

SH 3

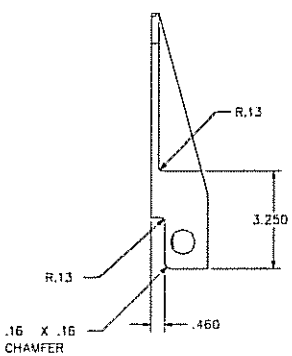

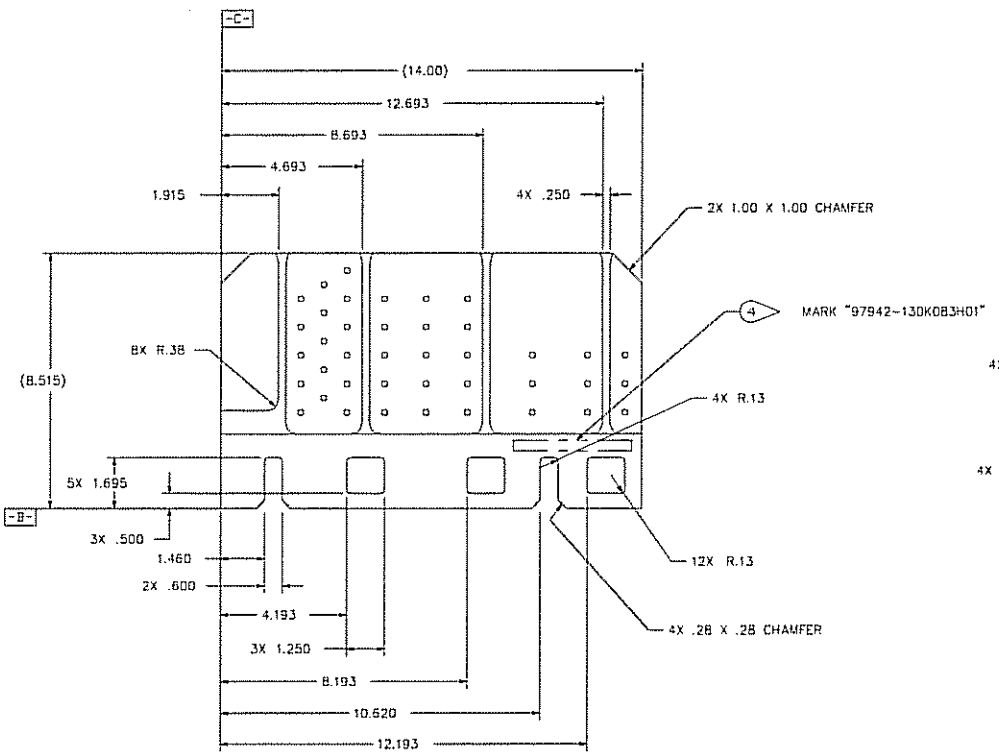

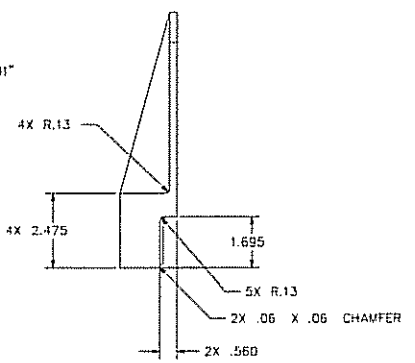

COMPUTER GENERATED DOCUMENT
MANUAL CHANGES NOT ALLOWED

H01

SIZE	CAGE CODE	DWG NO
D	97942	130K083
SCALE 1/2	REV B	SHEET 4

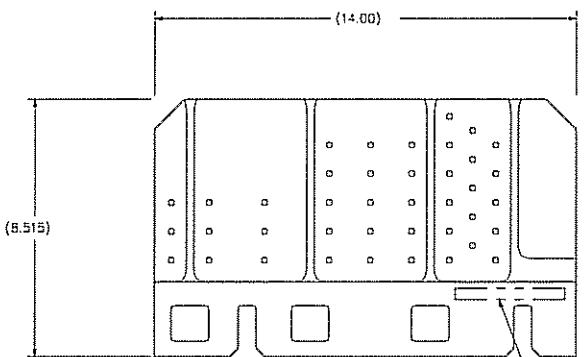

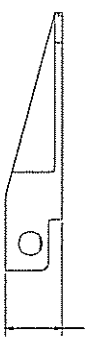

H02

OPPOSITE HAND OF H01

4 MARK "97942-130K083H02"

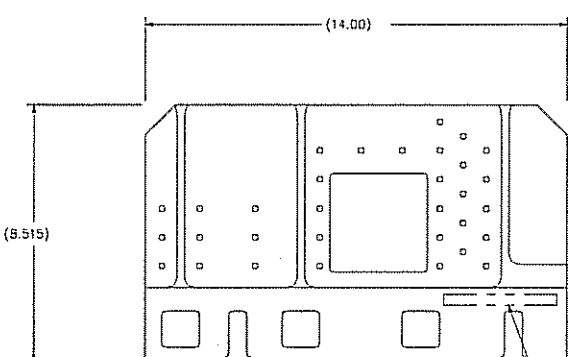

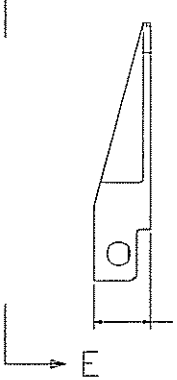

H03

SAME AS H02, EXCEPT AS NOTED

4 MARK "97942-130K083H03"

COMPUTER GENERATED DOCUMENT
MANUAL CHANGES NOT ALLOWED

SIZE	CAGE CODE	DWG NO
D	97942	130K083
SCALE 1/2	REV B	SHEET 5

UG

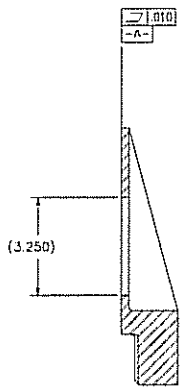

SECTION F – F

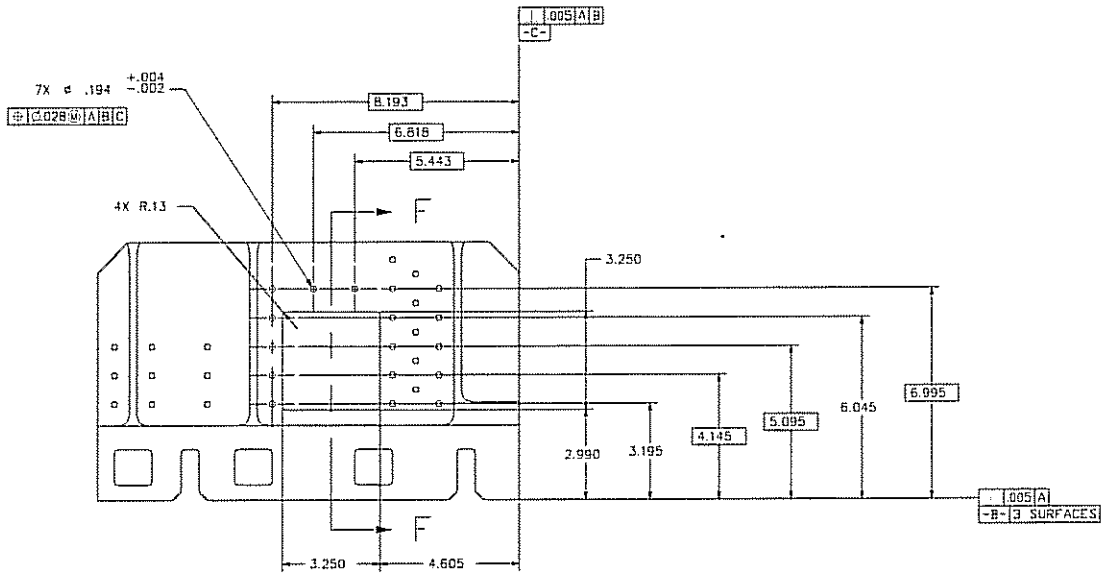

VIEW E – E

B/2 SH 5

H03

COMPUTER GENERATED DOCUMENT
MANUAL CHANGES NOT ALLOWED

SIZE	CAGE CODE	DWG NO
D	97942	130K083
SCALE 1/2	REV B	SHEET 6

UG

DOC NO: 130K083, REV: C, TITLE: BASE SUPPORT, REFLECTOR ASSY, UPPER SIDE, REAR

ASSEMBLY NO.	FIND NO.	ALT/EQV	QTY	U M	CAGE CODE	PART OR IDENTIFYING NUMBER	NOMENCLATURE OR DESCRIPTION	REF DESIGNATORS	NOTE DESCRIPTION	EXTERNAL IDENTIFICATION	PL
130K083H01	001		1	EA	79500	12010CC0020T	PLATE, AL, 2.00 THK		(14.00 X 8.515)	AMS-QQ-A-250/11, TEM T651	
130K083H01	100		AR		79500	83125BA	COATING, CHROMATE, ON AL COAT PER MIL-C-5541-CL1A			81349-MIL-C-5541, CL 1A	
130K083H01	101		REF		97942	PS83680PA	PAINT AND PRIMER, APPLICATION OF				
130K083H01	102		AR		97942	32235EJ	COATING PEU, ORN				
130K083H01	103		AR		97942	83869NB/4	MARKING, INK AND LABEL				
130K083H02	002		1	EA	79500	12010CC0020T	PLATE, AL, 2.00 THK		(14.00 X 8.515)	AMS-QQ-A-250/11, TEM T651	
130K083H02	100		AR		79500	83125BA	COATING, CHROMATE, ON AL COAT PER MIL-C-5541-CL1A			81349-MIL-C-5541, CL 1A	
130K083H02	101		REF		97942	PS83680PA	PAINT AND PRIMER, APPLICATION OF				
[illegible]083H02	102		AR		97942	32235EJ	COATING PEU, ORN				
[illegible]K083H02	103		AR		97942	83869NB/4	MARKING, INK AND LABEL				
130K083H03	003		1	EA	79500	12010CC0020T	PLATE, AL, 2.00 THK		(14.00 X 8.515)	AMS-QQ-A-250/11, TEM T651	
130K083H03	100		AR		79500	83125BA	COATING, CHROMATE, ON AL COAT PER MIL-C-5541-CL1A			81349-MIL-C-5541, CL 1A	
130K083H03	101		REF		97942	PS83680PA	PAINT AND PRIMER, APPLICATION OF				
130K083H03	102		AR		97942	32235EJ	COATING PEU, ORN				
130K083H03	103		AR		97942	83869NB/4	MARKING, INK AND LABEL				

Notes:
Unless otherwise noted, all dimensions are in inches.
An X in the PL column indicates the existence of a separate parts list for the drawing identified in the "Part or Identifying Number" column. This information is provided for reference only

DWG NO. 130K084 SH 1 — 1 (20DS086)

PARENTHETIC IDENTITIES ARE FOR REFERENCE ONLY

1 UNLESS OTHERWISE SPECIFIED:

BREAK ALL SHARP CORNERS AND EDGES R.03 MAX OR CHAMFER .03 X .03 MAX.

SURFACE TEXTURE OF MACHINED SURFACES TO BE 125 MICRONCHES MAX.

DIMENSIONAL LIMITS APPLY BEFORE FINISHING.

2 CHROMATE COAT PER FN 100.

3 PAINT PER FN 101 USING FN 102.

4 MARK PER FN 103 APPROX AS SHOWN.

SHEET REVISION STATUS

5	4	3	2	1	SHEET NO.
		E	B	E	REV

REVISIONS

ZONE	REV	DESCRIPTION		DATE	APPROVED
	--	DRAWING RELEASED		05-04-16	J.MOLLER
	A	SEE REV G3000	WMW/MGS	05-05-26	ROSENBERGER
	B	SEE REV H00W9	TNL/VLB	05-07-11	ROSENBERGER
	C	SEE REV H23P9.02	MEF/MSB	05-08-10	ROSENBERGER
	D	SEE REV H2475	APF/VLB	05-08-15	ROSENBURGER
	E	SEE REV H2BR8	KAR/KAR	05-08-18	ROSENBRGER

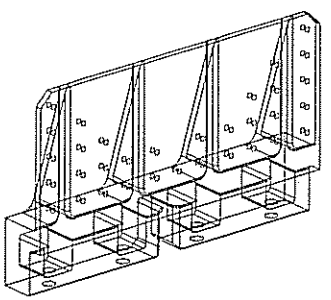

THIS VIEW FOR REFERENCE ONLY

COMPUTER GENERATED DOCUMENT
MANUAL CHANGES NOT ALLOWED

SEE SEPARATE PARTS LIST

MFG ENGR W.MOORE	MFG DFN -----
IM/MC/TMPLST -----	STRUCTURAL L.HOTZMANN
PT LEAD A.ROSSON	ES SENS ENG -----
QUALITY L.TURNER	ENGR MGT M.HODGES

SEE PL	SEE PL
NEXT ASSY	USED ON
APPLICATION	

INTERPRET DIMENSIONS AND TOLERANCES IAW ANSI Y14.5M-1982 UNLESS OTHERWISE SPECIFIED DIMENSIONS ARE IN INCHES DO NOT SCALE TOLERANCES ON

2 PLACE	3 PLACE	ANGLES
±.02	±.010	±---

SIMILAR TO NONE

INTERPRET DRAWING IAW DOD-STD-100

CONTR NO. DTFAWA-04-C-00067

ORIGINAL DATE 05-02-04

DRAFTER M.VANSCOY	MECH ENGR D.KEMPC
CHECKER M.VANSCOY	ELEC ENGR -----
DFTG SUPV J.MOLLER	DSGN MGT M.RILEY
CUSTOMER -----	

NORTHROP GRUMMAN CORPORATION
BALTIMORE, MARYLAND 21203

BASE SUPPORT, REFLECTOR ASSY, UPPER FRONT/REAR

SIZE	CAGE CODE	DWG NO.
D	97942	130K084

SCALE NONE WGHT SHEET 1 OF 3

UG

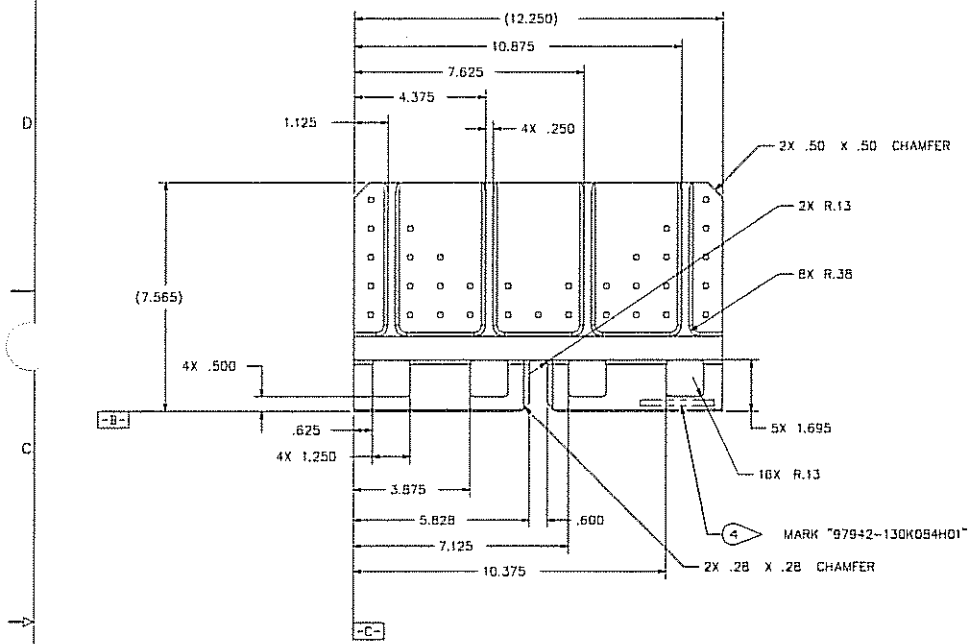

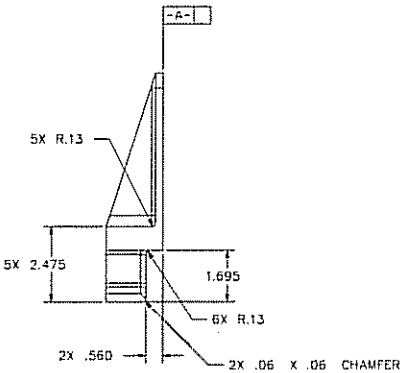

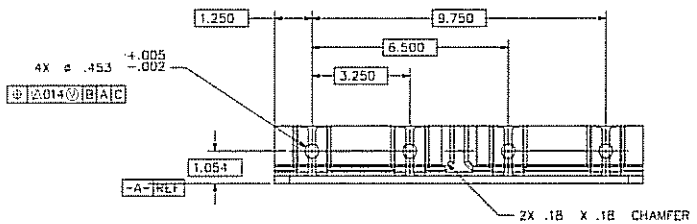

VIEW B-B⌀1 SH 2

B 5

COMPUTER GENERATED DOCUMENT
MANUAL CHANGES NOT ALLOWED

SIZE	CAGE CODE	DWG NO
D	97942	130K084
SCALE 1/2	REV E	SHEET 3

UG

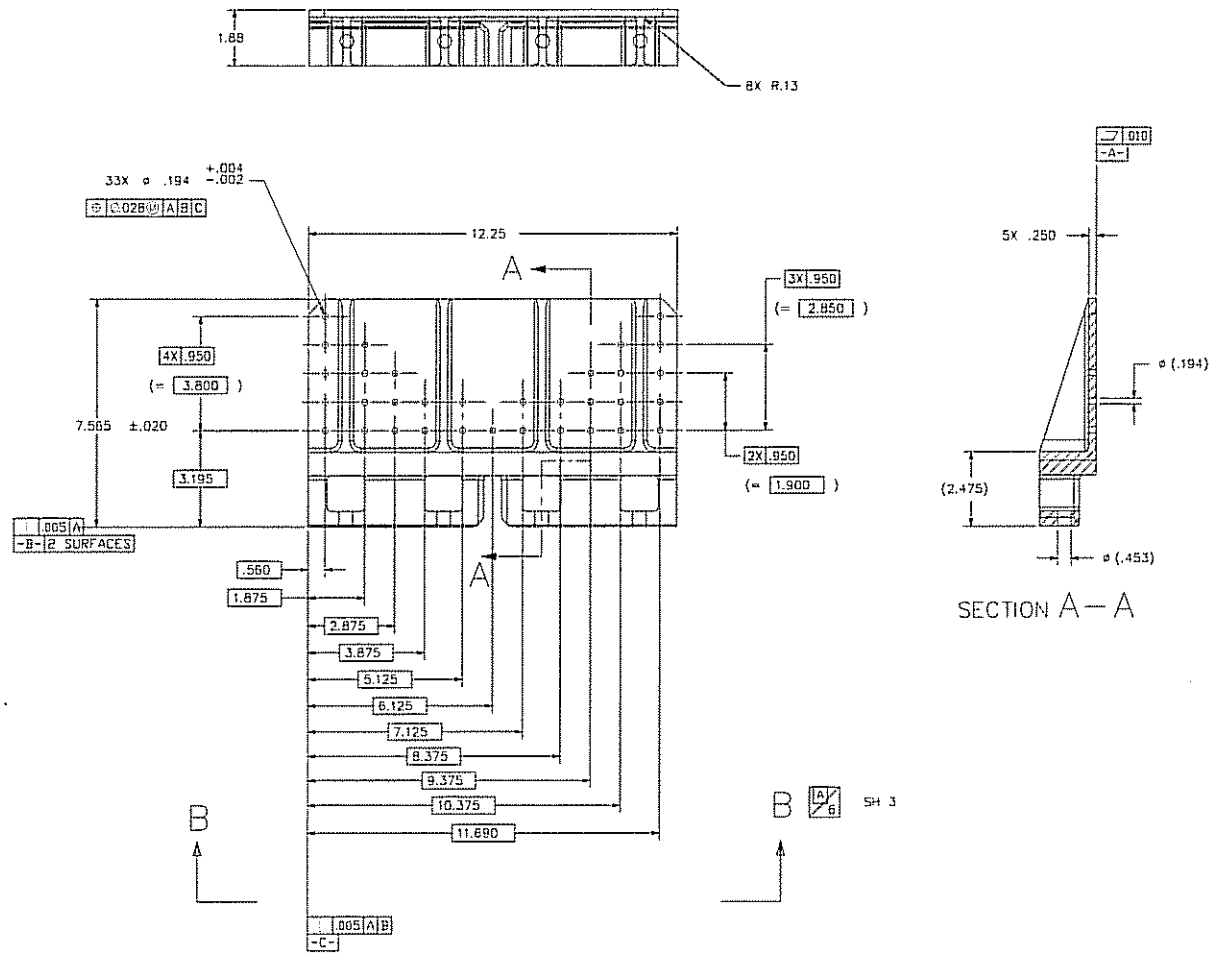

SECTION A–A

COMPUTER GENERATED DOCUMENT
MANUAL CHANGES NOT ALLOWED

SIZE	CAGE CODE	DWG NO.
D	97942	130K084
SCALE 1/2	REV B	SHEET 2

UG

DOC NO: 130K084, REV: E, TITLE: BASE SUPPORT, REFLECTOR ASSY, UPPER FRONT/ REAR

ASSEMBLY NO.	FIND NO.	ALT/EQV	QTY	U M	CAGE CODE	PART OR IDENTIFYING NUMBER	NOMENCLATURE OR DESCRIPTION	REF DESIGNATORS	NOTE DESCRIPTION	EXTERNAL IDENTIFICATION	PL
130K084H01	001		1	EA	79500	12010CC0020T	PLATE, AL, 2.00 THK		(12.25 X 7.565)	AMS-QQ-A-250/11, TEM T651	
130K084H01	100		AR		79500	83125BA	COATING, CHROMATE, ON AL COAT PER MIL-C-5541-CL1A			81349-MIL-C-5541, CL 1A	
130K084H01	101		REF		97942	PS83660PA	PAINT AND PRIMER, APPLICATION OF				
130K084H01	102		AR		97942	32235EJ	COATING PEU, ORN				
130K084H01	103		AR		97942	83869NB/4	MARKING, INK AND LABEL				

Notes:
Unless otherwise noted, all dimensions are in inches.
An X in the PL column indicates the existence of a separate parts list for the drawing identified in the "Part or Identifying Number" column. This information is provided for reference only

PARENTHESIS DENOTES ARE FOR REFERENCE ONLY

1 BAG AND TAG PER FN 103.

2 CHROMATE PER FN 100.

SHEET REVISION STATUS					
5	4	3	2	1	SHEET NO.
					REV

DWG NO. 130K088 SH 1 1 (20DS086)

REVISIONS

ZONE	REV	DESCRIPTION		DATE	APPROVED
	–	DRAWING RELEASED		05-04-18	J.MOLLER
	A	SEE REV HOBVS.03	M.C/M.B	05-07-11	ROSENBERGER

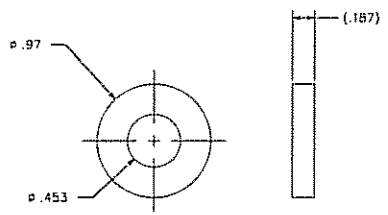

H01

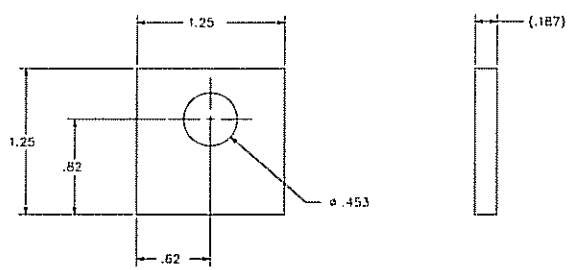

H02

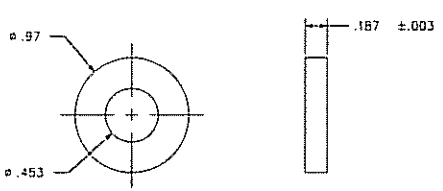

H03 2

COMPUTER GENERATED DOCUMENT
MANUAL CHANGES NOT ALLOWED

SEE SEPARATE PARTS LIST

MFG ENGR -----	MFG OPN -----		
INSP/MC/TMPST -----	AGUE -----		
MFT LEAD A ROBSON	ES SENS ENG -----	SEE PL	SEE PL
QUALITY L.TURNER	ENGR MGT M.HODGES	NEXT ASSY	USED ON
		APPLICATION	

INTERPRET DIMENSIONS AND TOLERANCES IAW MIL-STD-100 UNLESS OTHERWISE SPECIFIED DIMENSIONS ARE IN INCHES DO NOT SCALE

TOLERANCES ON

2 PLACE	3 PLACE	ANGLES
±.01	±.005	±---

SIMILAR TO NONE

INTERPRET DRAWING IAW DOD-STD-100

CONTR NO. DTFAWA-04-C-00067
ORIGINAL DATE 05-02-09

DRAFTER M.VANSCOY	MECH ENGR G.KEMPKE
CHECKER M.VANSCOY	ELEC ENGR -----
DFTG SUPV J.MOLLER	DSGN MGT M.RILEY

CUSTOMER -----

NORTHROP GRUMMAN CORPORATION
BALTIMORE, MARYLAND 21203

SHIM, REFLECTOR BASE THICKNESS

SIZE	CAGE CODE	DWG NO.
D	97942	130K088

SCALE 2/1 WEIGHT SHEET 1 OF 1

UG

DOC NO: 130K088, REV: A, TITLE: SHIM, REFLECTOR BASE THICKNESS

ASSEMBLY NO.	FIND NO.	ALT/EQV	QTY	U M	CAGE CODE	PART OR IDENTIFYING NUMBER	NOMENCLATURE OR DESCRIPTION	REF DESIGNATORS	NOTE DESCRIPTION	EXTERNAL IDENTIFICATION	PL
130K088H01	001		1	EA	79500	12002JV1873T	SHIM, AL, LAM, .187 THK		(.970 DIA)	AMS-DTL-22499, CMPSN 1, TYPE I, CL 2	
130K088H01	103		AR		97942	83869NB/4	MARKING, INK AND LABEL				
130K088H02	002		1	EA	79500	12002JV1873T	SHIM, AL, LAM, .187 THK		(1.25 X 1.25)	AMS-DTL-22499, CMPSN 1, TYPE I, CL 2	
130K088H02	103		AR		97942	83869NB/4	MARKING, INK AND LABEL				
130K088H03	003		1		79500	12006CA	ALUMINUM ALLOY BARS, ROLLED AND COLD FINISHED		(1.00 DIA)		
130K088H03	100		AR		79500	83125BA	COATING, CHROMATE, ON AL COAT PER MIL-C-5541-CL1A			81349-MIL-C-5541, CL 1A	
130K088H03	103		AR		97942	83869NB/4	MARKING, INK AND LABEL				

Notes:

Unless otherwise noted, all dimensions are in inches.

An X in the PL column indicates the existence of a separate parts list for the drawing identified in the "Part or Identifying Number" column. This information is provided for reference only

DWG NO.	SH.	
130K092	1	1 (20DS086)

SHEET REVISION STATUS					
5	4	3	2	1	SHEET NO.
B	B	C	B	C	REV

REVISIONS

ZONE	REV	DESCRIPTION		DATE	APPROVED
	–	DRAWING RELEASED		05-04-18	J MOLLER
	A	SEE REV G90E2	ALD/WGS	05-05-26	ROSENBERGER
	B	SEE REV H00Y2	KAR/MLB	05-07-12	ROSENBERGER
		REISSUED	MSD/MSB	05-07-12	ROSENBERGER
	C	SEE REV H23P9.03	MDF/MSB	05-08-10	ROSENBERGER

PARENTHETIC DENOTES ARE FOR REFERENCE ONLY

1 UNLESS OTHERWISE SPECIFIED:

BREAK ALL SHARP CORNERS AND EDGES R.03 MAX OR CHAMFER .03 X .03 MAX.

SURFACE TEXTURE OF MACHINED SURFACES TO BE 125 MICROINCHES MAX.

DIMENSIONAL LIMITS APPLY BEFORE FINISHING.

2 CHROMATE COAT PER FN 100.

3 PAINT PER FN 101 USING FN 102.

(4) MARK PER FN 103 APPROX AS SHOWN.

(5) BREAK FARSIDE EDGE OF HOLE WITH .030 ±.010 X .030 ±.010 CHAMFER.

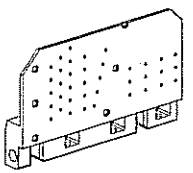

H01

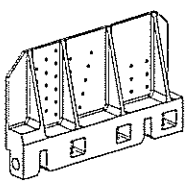

H02

THESE VIEWS FOR REFERENCE ONLY

COMPUTER GENERATED DOCUMENT
MANUAL CHANGES NOT ALLOWED
SEE SEPARATE PARTS LIST

MFG ENGR W.MOORE	MFG CPN ------
EW/EMC/TEMPEST ------	STRUCTURAL L.FEITZMANN
PT LEAD A.ROBSON	ES NEWS ENG ------
QUALITY L.TURNER	ENGR MGT M.HODGES

SEE PL	SEE PL
NEXT ASSY	USED ON
APPLICATION	

INTERPRET DIMENSIONS AND TOLERANCES IAW MIL-STD-100 UNLESS OTHERWISE SPECIFIED DIMENSIONS ARE IN INCHES DO NOT SCALE

TOLERANCES ON		
2 PLACE	3 PLACE	ANGLES
±.02	±.010	±---

SIMILAR TO NONE

INTERPRET DRAWING IAW DOD-STD-100

CONTR NO. DTFAWA-04-C-00067
ORIGINAL DATE 05-02-04

DRAFTER	MECH ENGR
M.VANSCOY	G KEMPE
CHECKER	ELEC ENGR
M.VANSCOY	------
DPTG SUPV	DSGN MGT
J MOLLER	M RILEY

CUSTOMER ------

NORTHROP GRUMMAN CORPORATION
BALTIMORE, MARYLAND 21203

BASE SUPPORT, REFLECTOR ASSY, UPPER SIDE, FRONT

SIZE	CAGE CODE	DWG NO.
D	97942	130K092

SCALE NONE | WEIGHT | SHEET 1 OF 5

UG

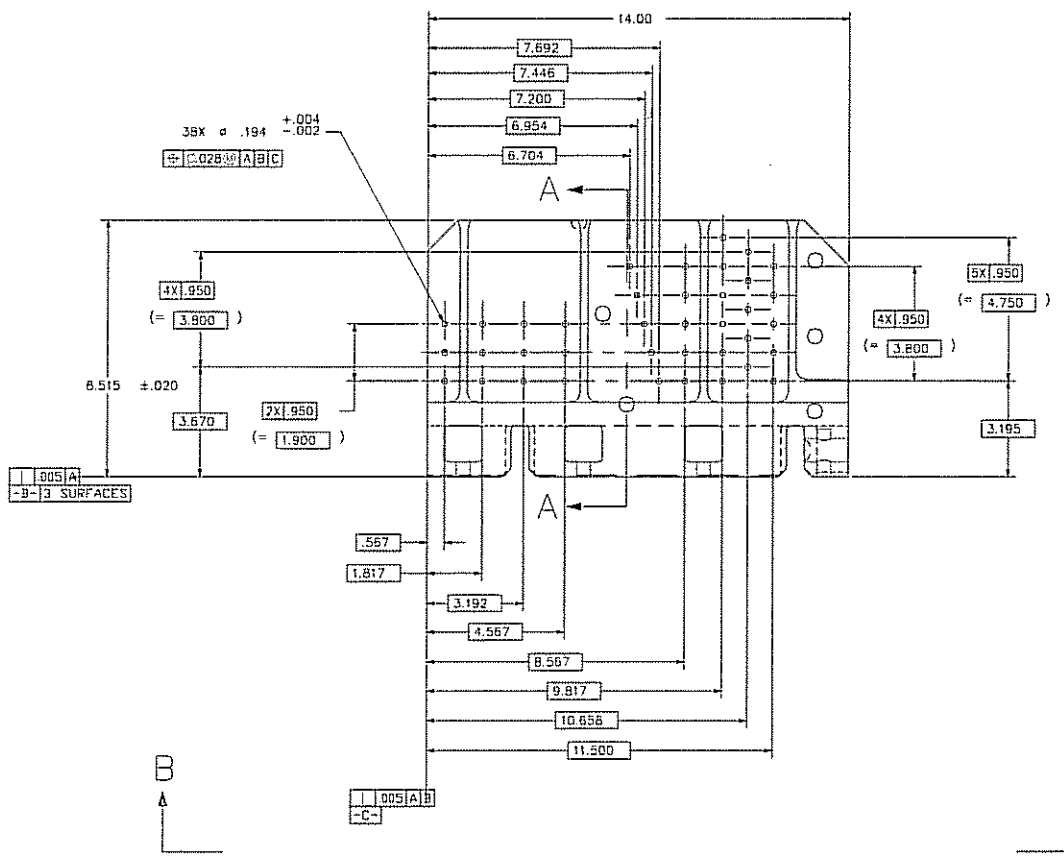

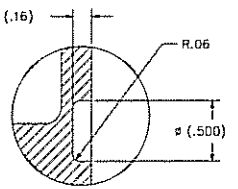

VIEW C
SCALE 2/1
6 PLACES

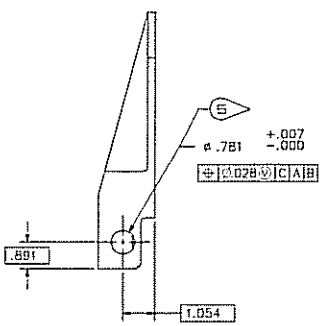

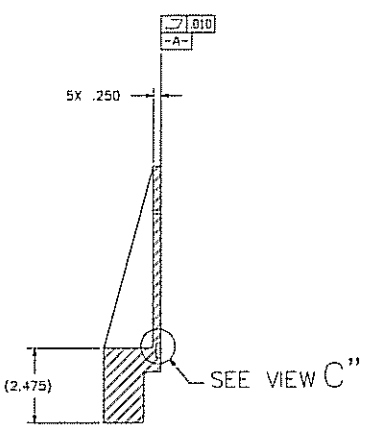

B C/5 SH 3

H01

SECTION A—A

COMPUTER GENERATED DOCUMENT
MANUAL CHANGES NOT ALLOWED

SIZE	CAGE CODE	DWG NO
D	97942	130K092
SCALE 1/2	REV B	SHEET 2

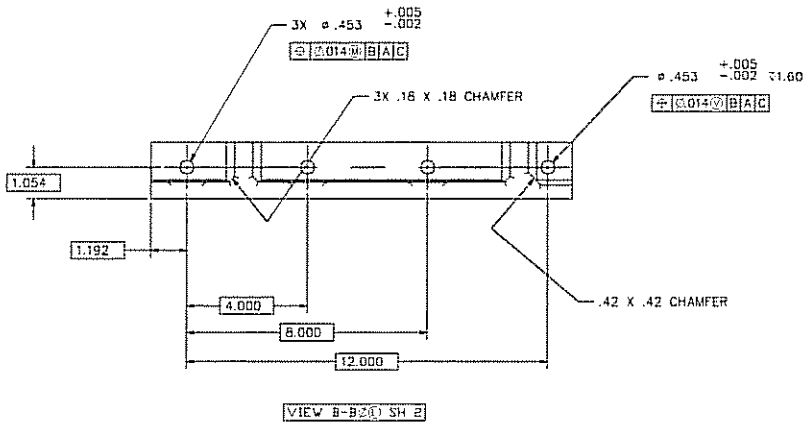

B
3

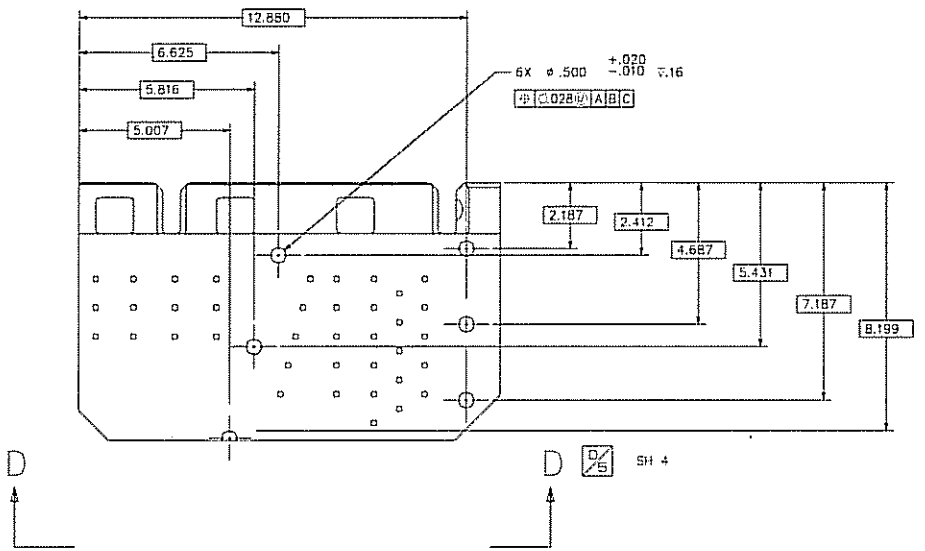

H01

COMPUTER GENERATED DOCUMENT
MANUAL CHANGES NOT ALLOWED

SIZE	CAGE CODE	DWG NO
D	97942	130K092
SCALE 1/2	REV C	SHEET 3

UG

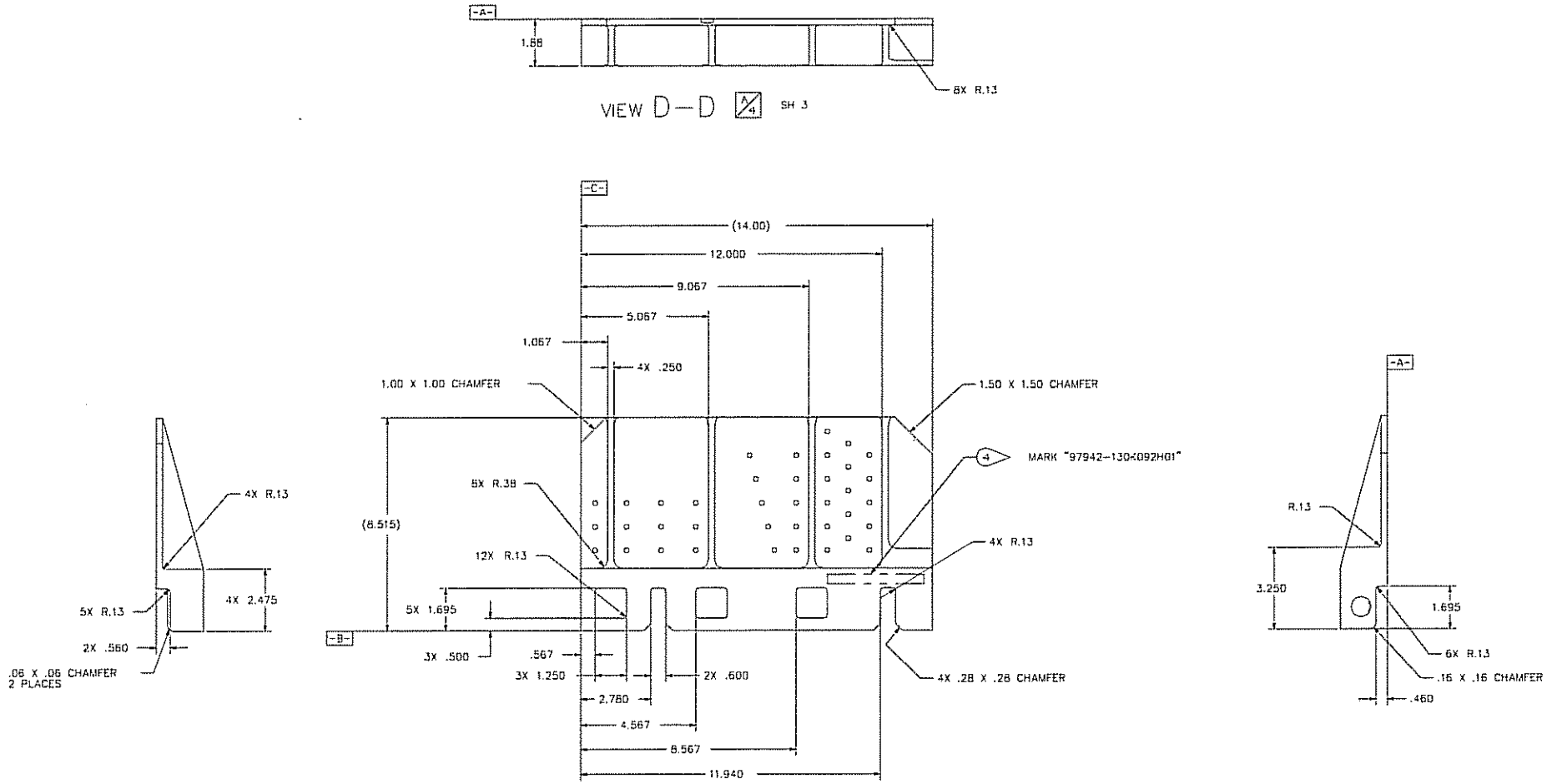

COMPUTER GENERATED DOCUMENT
MANUAL CHANGES NOT ALLOWED

H01

SIZE	CAGE CODE	DWG NO
D	97942	130K092
SCALE 1/2	REV B	SHEET 4

UG

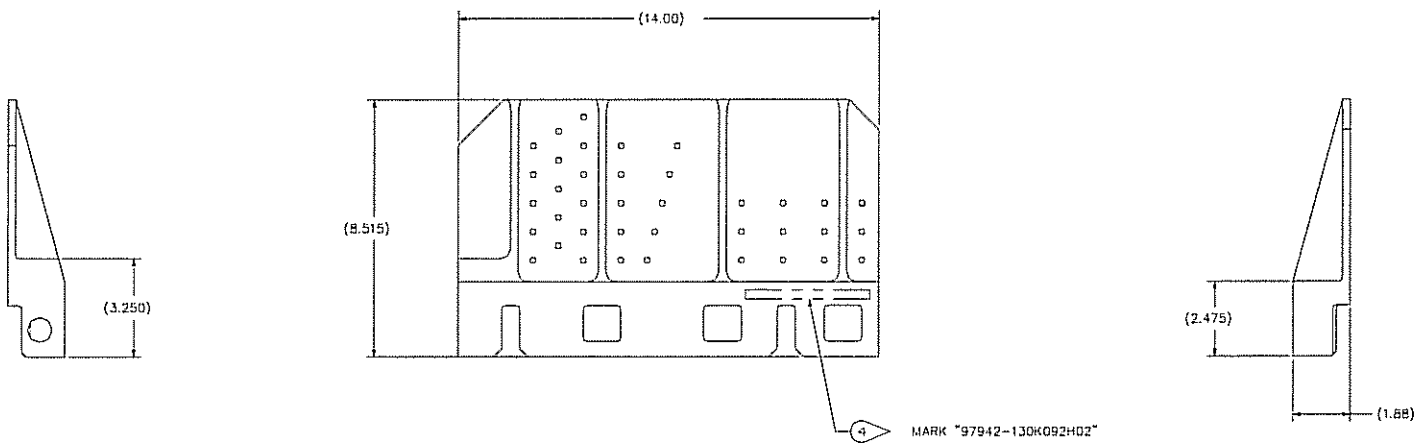

H02

OPPOSITE HAND OF H01

COMPUTER GENERATED DOCUMENT
MANUAL CHANGES NOT ALLOWED

SIZE	CAGE CODE	DWG NO
D	97942	130K092
SCALE 1/2	REV B	SHEET 5

UG

DOC NO: 130K092, REV: C, TITLE: BASE SUPPORT, REFLECTOR ASSY, UPPER SIDE, FRONT

ASSEMBLY NO.	FIND NO.	ALT/EQV	QTY	U M	CAGE CODE	PART OR IDENTIFYING NUMBER	NOMENCLATURE OR DESCRIPTION	REF DESIGNATORS	NOTE DESCRIPTION	EXTERNAL IDENTIFICATION	PL
130K092H01	001		1	EA	79500	12010CC0020T	PLATE, AL, 2.00 THK		(14.00 X 8.515)	AMS-QQ-A-250/11, TEM T651	
130K092H01	100		AR		79500	83125BA	COATING, CHROMATE, ON AL COAT PER MIL-C-5541-CL1A			81349-MIL-C-5541, CL 1A	
130K092H01	101		REF		97942	PS83680PA	PAINT AND PRIMER, APPLICATION OF				
130K092H01	102		AR		97942	32235EJ	COATING PEU, ORN				
130K092H01	103		AR		97942	83869NB/4	MARKING, INK AND LABEL				
130K092H02	002		1	EA	79500	12010CC0020T	PLATE, AL, 2.00 THK		(14.00 X 8.515)	AMS-QQ-A-250/11, TEM T651	
130K092H02	100		AR		79500	83125BA	COATING, CHROMATE, ON AL COAT PER MIL-C-5541-CL1A			81349-MIL-C-5541, CL 1A	
130K092H02	101		REF		97942	PS83680PA	PAINT AND PRIMER, APPLICATION OF				
130K092H02	102		AR		97942	32235EJ	COATING PEU, ORN				
130K092H02	103		AR		97942	83869NB/4	MARKING, INK AND LABEL				

Notes:
Unless otherwise noted, all dimensions are in inches.
An X in the PL column indicates the existence of a separate parts list for the drawing identified in the "Part or Identifying Number" column. This information is provided for reference only

DWG NO. 135K915 SH 1 — 1 (20DS086)

SHEET REVISION STATUS					
5	4	3	2	1	SHEET NO.
		A	A	A	REV

REVISIONS				
ZONE	REV	DESCRIPTION	DATE	APPROVED
	–	DRAWING RELEASED	05-04-	GJ MOLLER
	A	SEE REV HO3P9.04 AID/WLB	05-08-10	ROSENBERGER

PARENTHETIC DIMENSIONS ARE FOR REFERENCE ONLY

1 UNLESS OTHERWISE SPECIFIED:

BREAK ALL SHARP CORNERS AND EDGES R.03 MAX OR CHAMFER .03 X .03 MAX.

SURFACE TEXTURE OF MACHINED SURFACES TO BE 125 MICROINCHES MAX.

DIMENSIONAL LIMITS APPLY BEFORE FINISHING.

2 CHROMATE COAT PER FN 100.

3 PAINT PER FN 101 USING FN 102.

MARK PER FN 103 APPROX AS SHOWN.

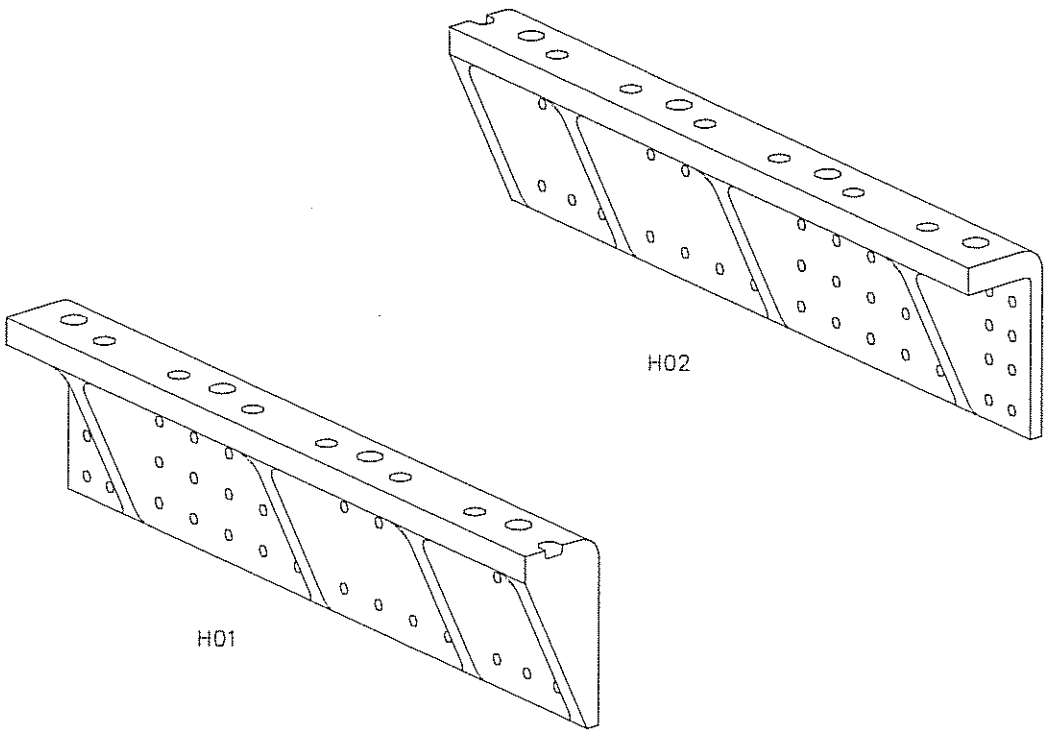

THESE VIEWS FOR REFERENCE ONLY

COMPUTER GENERATED DOCUMENT
MANUAL CHANGES NOT ALLOWED
SEE SEPARATE PARTS LIST

MFG ENGR W MOORE	MFG CTR -----
FW/EMC/TEMPEST -----	STRUCTURAL L HEITZMANN
MT LEAD A REDSON	ES SUBS ENG -----
QUALITY L TURNER	ENGR MGT M HODGES

APPLICATION	
SEE PL	SEE PL
NEXT ASSY	USED ON

INTERPRET DRAWING IAW INCO-STD-100

TOLERANCES ON		
2 PLACE	3 PLACE	ANGLES
±.02	±.010	±----

SIMILAR TO 109K134

CONTR NO. DTFAWA-04-C-00067
ORIGINAL DATE 05-01-20

DRAFTER M VANSCOY	MECH ENGR G KEMPC
CHECKER M VANSCOY	ELEC ENGR -----
DFTG SUPV J MOLLER	DSGN MGT M RILEY
CUSTOMER -----	

NORTHROP GRUMMAN CORPORATION
BALTIMORE, MARYLAND 21203

BASE SUPPORT, REFLECTOR ASSY, LOWER OUTSIDE REAR

SIZE	CAGE CODE	DWG NO
D	97942	135K915

SCALE NONE WEIGHT SHEET 1 OF 3

UG

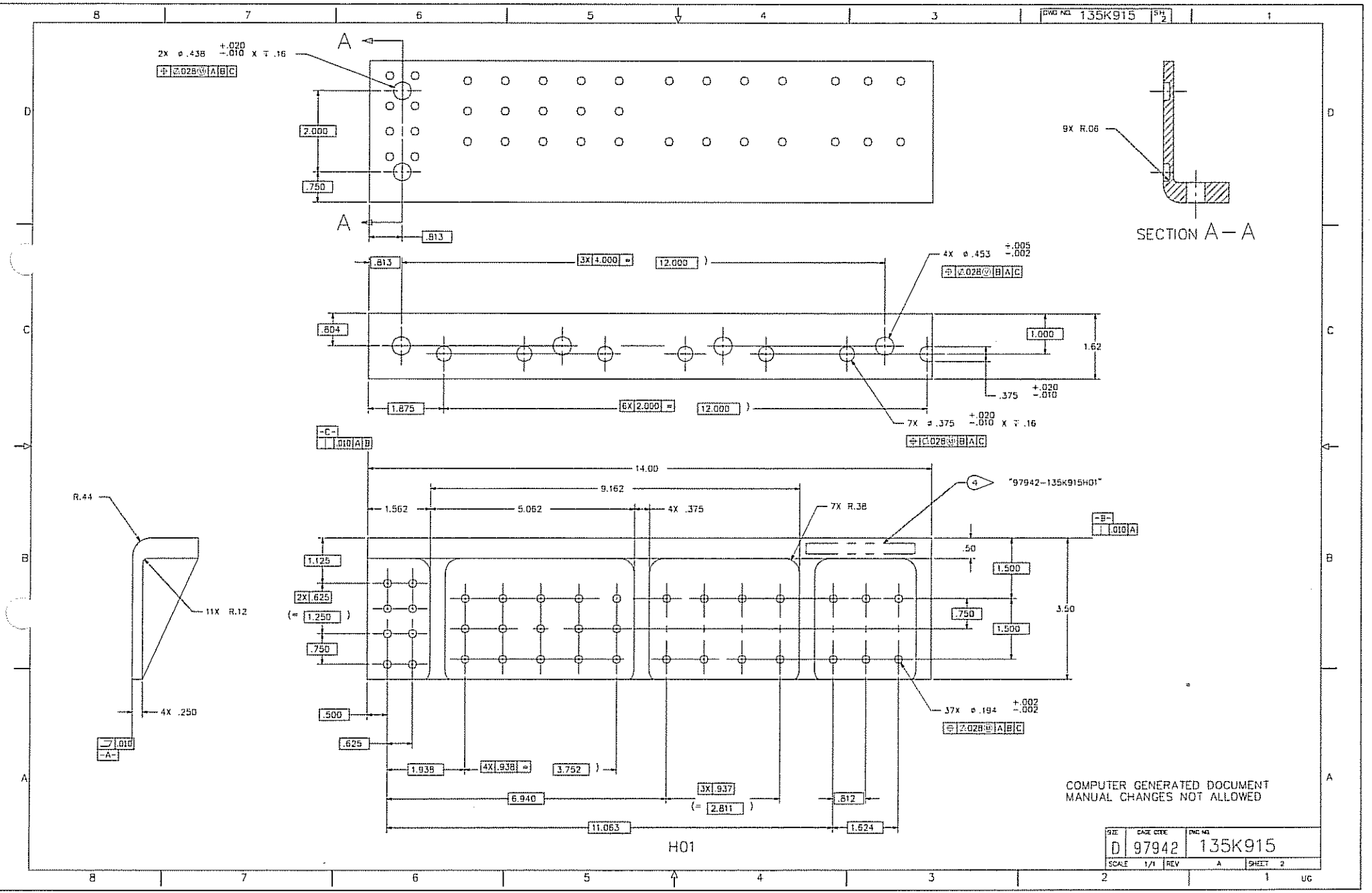
DWG NO. 135K915 SH 2
2X ø .438 +.020 -.010 X ↧ .16
⌖ ø.028Ⓜ A B C
A
2.000
.750
.813
9X R.06
SECTION A–A
3X 4.000
12.000
4X ø .453 +.005 -.002
⌖ ø.028Ⓜ B A C
.604
1.000
1.62
.375 +.020 -.010
1.875
6X 2.000
7X ø .375 +.020 -.010 X ↧ .16
⌖ ø.028Ⓜ B A C
-C-
.010 A B
14.00
9.162
1.562
5.062
4X .375
7X R.38
4
"97942-135K915H01"
-B-
.010 A
.50
1.500
3.50
.750
1.500
R.44
11X R.12
1.125
2X .625
(= 1.250)
.750
4X .250
.010
-A-
.500
.625
37X ø .194 +.002 -.002
⌖ ø.028Ⓜ A B C
1.938
4X .938
3.752
6.940
3X .937
(= 2.811)
.812
11.063
1.624
H01
COMPUTER GENERATED DOCUMENT
MANUAL CHANGES NOT ALLOWED
SIZE D
CAGE CODE 97942
DWG NO. 135K915
SCALE 1/1
REV A
SHEET 2
UG

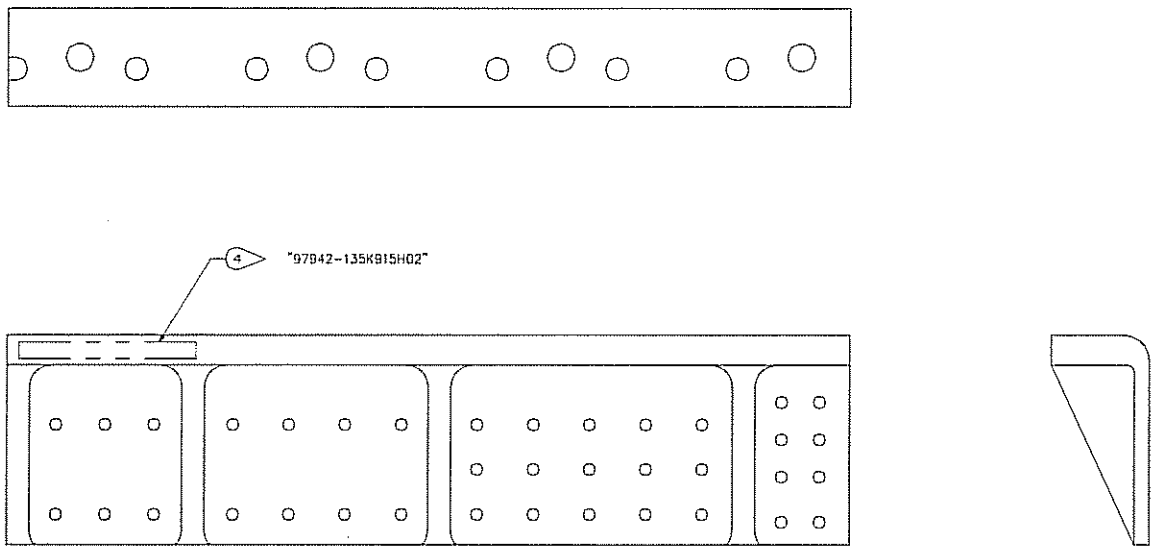

H02

SAME AS H01 EXCEPT AS MARKED AND OPPOSITE

COMPUTER GENERATED DOCUMENT
MANUAL CHANGES NOT ALLOWED

SIZE	CAGE CODE	DWG NO
D	97942	135K915
SCALE 1/1	REV A	SHEET 3

DOC NO: 135K915, REV: A, TITLE: BASE SUPPORT, REFLECTOR ASSY, LOWER OUTSIDE REAR

ASSEMBLY NO.	FIND NO.	ALT/EQV	QTY	U M	CAGE CODE	PART OR IDENTIFYING NUMBER	NOMENCLATURE OR DESCRIPTION	REF DESIGNATORS	NOTE DESCRIPTION	EXTERNAL IDENTIFICATION	PL
135K915H01	001		1	IN	79500	12006CA00200040	BAR, AL, 2.00 X 4.00		(14.00 LG)	AMS-QQ-A-225/8, TEM T6 OR T651	
135K915H01	001	ALT			79500	12010CC1752T	PLATE, AL, 1.75 THK		(14.00 X 3.50)	AMS-QQ-A-250/11, TEM T651	
135K915H01	100		AR		79500	83125BA	COATING, CHROMATE, ON AL COAT PER MIL-C-5541-CL1A			81349-MIL-C-5541, CL 1A	
135K915H01	101		REF		97942	PS83680PA	PAINT AND PRIMER, APPLICATION OF				
135K915H01	102		AR		97942	32235EJ	COATING PEU, ORN				
135K915H01	103		AR		97942	83869NB/4	MARKING, INK AND LABEL				
135K915H02	002		1	IN	79500	12006CA00200040	BAR, AL, 2.00 X 4.00		(14.00 LG	AMS-QQ-A-225/8, TEM T6 OR T651	
915H02	002	ALT			79500	12010CC1752T	PLATE, AL, 1.75 THK		(14.00 X 3.50)	AMS-QQ-A-250/11, TEM T651	
135K915H02	100		AR		79500	83125BA	COATING, CHROMATE, ON AL COAT PER MIL-C-5541-CL1A			81349-MIL-C-5541, CL 1A	
135K915H02	101		REF		97942	PS83680PA	PAINT AND PRIMER, APPLICATION OF				
135K915H02	102		AR		97942	32235EJ	COATING PEU, ORN				
135K915H02	103		AR		97942	83869NB/4	MARKING, INK AND LABEL				

Notes:
Unless otherwise noted, all dimensions are in inches.
An X in the PL column indicates the existence of a separate parts list for the drawing identified in the "Part or Identifying Number" column. This information is provided for reference only

DWG NO. 135K916 SH 1 — 1 (20DS086)

SHEET REVISION STATUS					
5	4	3	2	1	SHEET NO.
		A	A	A	REV

REVISIONS				
ZONE	REV	DESCRIPTION	DATE	APPROVED
	--	DRAWING RELEASED	05-04-	G.J.MOLLER
	A	SEE REV H2399 05 ALD/MLB	05-08-10	ROSCHBACHER

PARENTHESES EXHIBITED ARE FOR REFERENCE ONLY

1 UNLESS OTHERWISE SPECIFIED:

BREAK ALL SHARP CORNERS AND EDGES R.03 MAX OR CHAMFER .03 X .03 MAX.

SURFACE TEXTURE OF MACHINED SURFACES TO BE 125 MICROINCHES MAX.

DIMENSIONAL LIMITS APPLY BEFORE FINISHING.

2 CHROMATE COAT PER FN 100.

3 PAINT PER FN 101 USING FN 102.

MARK PER FN 103 APPROX AS SHOWN.

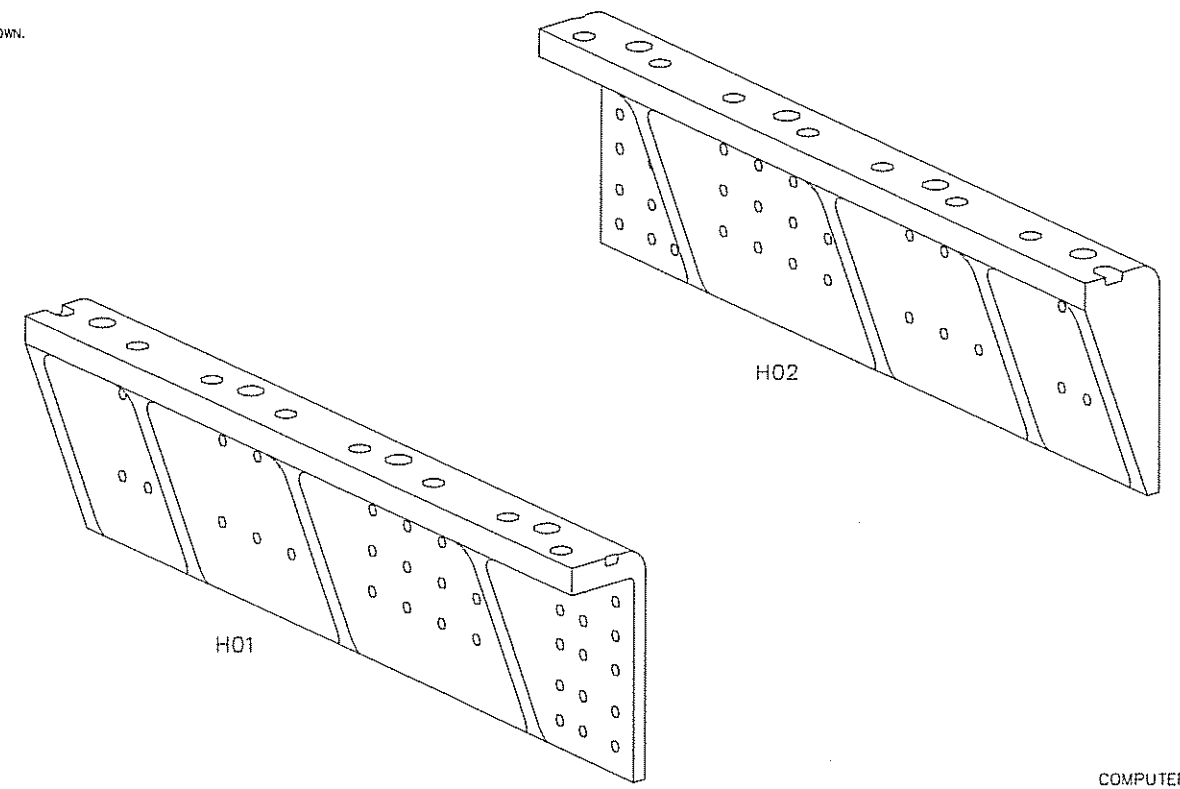

THESE VIEWS FOR REFERENCE ONLY

COMPUTER GENERATED DOCUMENT
MANUAL CHANGES NOT ALLOWED
SEE SEPARATE PARTS LIST

MFG ENGR W MOORE	MFG OPN -----
EM/EMC/TEMPEST -----	STRUCTURAL L.HEITZMANN
PT LEAD A.ROBSON	ES SEND ENG -----
QUALITY L.TURNER	ENGR MGT M.HODGES

APPLICATION	
SEE PL	SEE PL
NEXT ASSY	USED ON

INTERPRET DRAWING IAW DOD-STD-100

INTERPRET DIMENSIONS AND TOLERANCES IAW ANSI Y14.5M-1982 UNLESS OTHERWISE SPECIFIED DIMENSIONS ARE IN INCHES DO NOT SCALE

TOLERANCES ON		
2 PLACE	3 PLACE	ANGLES
±.02	±.010	±----

SIMILAR TO 109K135

CENTR NO. D1FAWA-04-C-0006

ORIGINAL DATE 05-01-29

DRAFTER M.VANSCOY	MECH ENGR G.KEMPIC
CHECKER M.VANSCOY	ELEC ENGR -----
DFTG SUPV J.MOLLER	DSGN MGT M.RILEY

CUSTOMER -----

NORTHROP GRUMMAN CORPORATION
BALTIMORE, MARYLAND 21203

BASE SUPPORT, REFLECTOR ASSY, LOWER OUTSIDE FRONT

SIZE	CAGE CODE	DWG NO.
D	97942	135K916

SCALE NONE WEIGHT SHEET 1 OF 3

UG

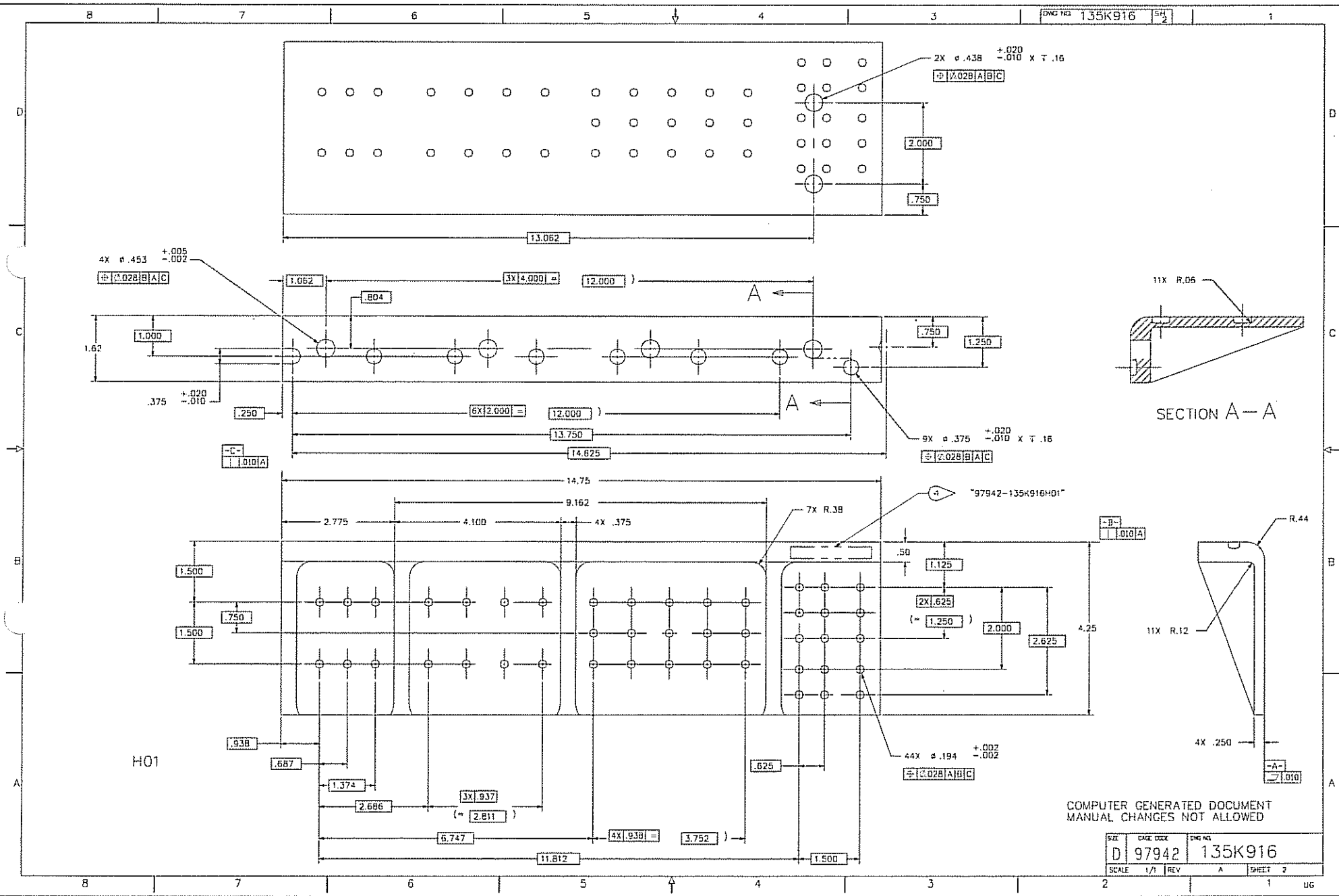
DWG NO 135K916 SH 2
2X ø .438 +.020 -.010 X T .16
⊕ ⌀.028 B A C
2.000
.750
13.062
4X ø .453 +.005 -.002
⊕ ⌀.028 B A C
1.062
3X 4.000 =
12.000
.804
A
1.000
1.62
.750
1.250
.375 +.020 -.010
.250
6X 2.000 =
12.000
13.750
14.625
-C-
.010 A
9X ø .375 +.020 -.010 X T .16
⊕ ⌀.028 B A C
11X R.06
SECTION A—A
14.75
9.162
2.775
4.100
4X .375
7X R.38
4
"97942-135K916H01"
-B-
.010 A
.50
1.125
1.500
.750
1.500
2X .625
(= 1.250)
2.000
2.625
4.25
R.44
11X R.12
.938
.687
1.374
2.686
3X .937
(= 2.811)
6.747
4X .938 =
3.752
11.812
.625
1.500
44X ø .194 +.002 -.002
⊕ ⌀.028 A B C
4X .250
-A-
.010
H01
COMPUTER GENERATED DOCUMENT
MANUAL CHANGES NOT ALLOWED
SIZE D
CAGE CODE 97942
DWG NO 135K916
SCALE 1/1
REV A
SHEET 2
UG

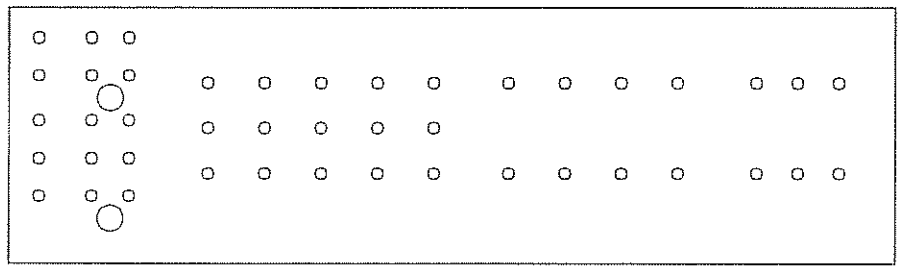

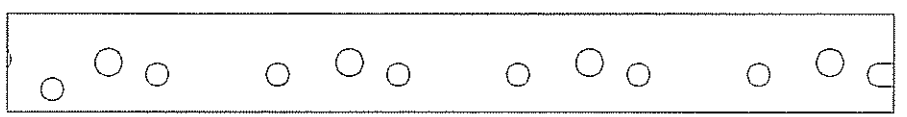

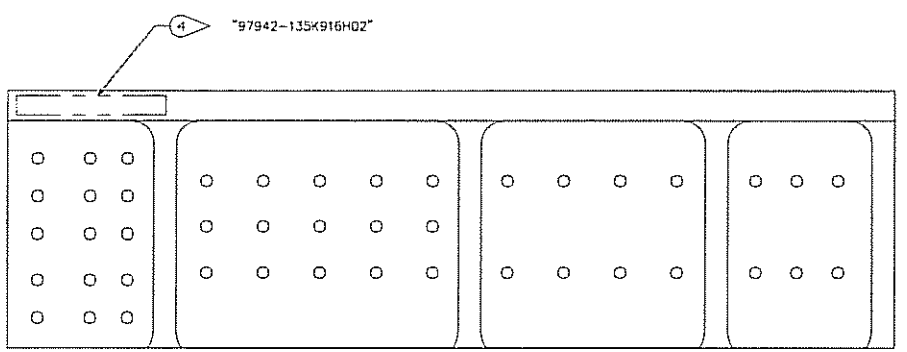

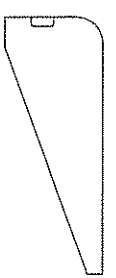

H02

SAME AS H01 EXCEPT AS
MARKED AND OPPOSITE

COMPUTER GENERATED DOCUMENT
MANUAL CHANGES NOT ALLOWED

SIZE	CAGE CODE	DWG NO
D	97942	135K916
SCALE 1/1	REV A	SHEET 3

UG

DOC NO: 135K916, REV: A, TITLE: BASE SUPPORT, REFLECTOR ASSY, LOWER OUTSIDE FRONT

ASSEMBLY NO.	FIND NO.	ALT/EQV	QTY	U M	CAGE CODE	PART OR IDENTIFYING NUMBER	NOMENCLATURE OR DESCRIPTION	REF DESIGNATORS	NOTE DESCRIPTION	EXTERNAL IDENTIFICATION	PL
135K916H01	001		1	IN	79500	12006CA00200050	BAR,AL,2.00 X 5.00		(14.75 LG)	AMS-QQ-A-225/8, TEM T6 OR T651	
135K916H01	001	ALT			79500	12010CC1752T	PLATE, AL, 1.75 THK		(14.75 X 4.25)	AMS-QQ-A-250/11, TEM T651	
135K916H01	100		AR		79500	83125BA	COATING, CHROMATE, ON AL COAT PER MIL-C-5541-CL1A			81349-MIL-C-5541, CL 1A	
135K916H01	101		REF		97942	PS83680PA	PAINT AND PRIMER, APPLICATION OF				
135K916H01	102		AR		97942	32235EJ	COATING PEU, ORN				
135K916H01	103		AR		97942	83869NB/4	MARKING, INK AND LABEL				
135K916H02	002		1	IN	79500	12006CA00200050	BAR,AL,2.00 X 5.00		(14.75 LG)	AMS-QQ-A-225/8, TEM T6 OR T651	
K916H02	002	ALT			79500	12010CC1752T	PLATE, AL, 1.75 THK		(14.75 X 4.25)	AMS-QQ-A-250/11, TEM T651	
135K916H02	100		AR		79500	83125BA	COATING, CHROMATE, ON AL COAT PER MIL-C-5541-CL1A			81349-MIL-C-5541, CL 1A	
135K916H02	101		REF		97942	PS83680PA	PAINT AND PRIMER, APPLICATION OF				
135K916H02	102		AR		97942	32235EJ	COATING PEU, ORN				
135K916H02	103		AR		97942	83869NB/4	MARKING, INK AND LABEL				

Notes:
Unless otherwise noted, all dimensions are in inches.
An X in the PL column indicates the existence of a separate parts list for the drawing identified in the "Part or Identifying Number" column. This information is provided for reference only

PARENTHESIS IDENTIFIES ARE FOR REFERENCE ONLY

1 UNLESS OTHERWISE SPECIFIED:

BREAK ALL SHARP CORNERS AND EDGES R.03 MAX OR CHAMFER .03 X .03 MAX.

SURFACE TEXTURE OF MACHINED SURFACES TO BE 125 MICROINCHES MAX.

DIMENSIONAL LIMITS APPLY BEFORE FINISHING.

2 CHROMATE COAT PER FN 100.

3 PAINT PER FN 101 USING FN 102.

MARK PER FN 103 APPROX AS SHOWN.

SHEET REVISION STATUS					
5	4	3	2	1	SHEET NO.
		B	B	B	REV

DWG NO. 135K917 SH 1 — 1 (20DS086)

REVISIONS

ZONE	REV	DESCRIPTION		DATE	APPROVED
	--	DRAWING RELEASED		05-04-16	J.MOLLER
PL	A	SEE REV CRTWB			
	B	SEE REV H23P9 00	ALD/VLB	05-08-15	ROSENBERGER

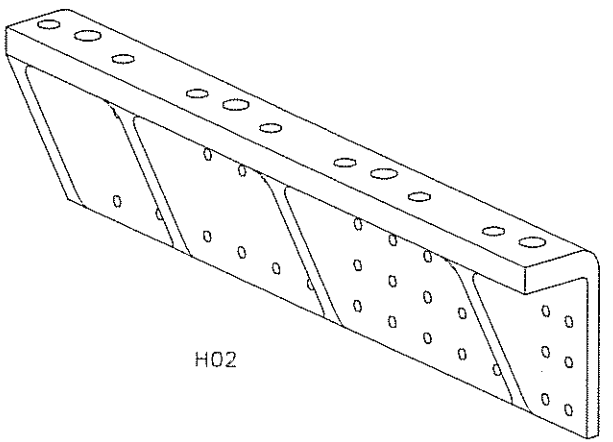

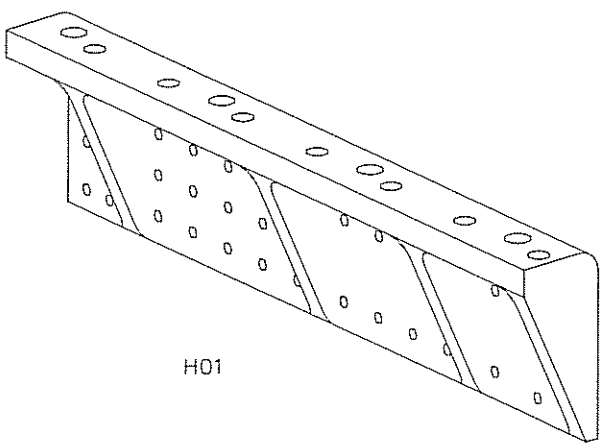

THESE VIEWS FOR REFERENCE ONLY

COMPUTER GENERATED DOCUMENT
MANUAL CHANGES NOT ALLOWED

SEE SEPARATE PARTS LIST

MFG ENG W MOORE	MFG OPS -----		
EM/EMC/TEMPEST -----	STRUCTURAL L.HOTZMANN		
PT LEAD A.ROBSON	ES SENS ENG -----	SEE PL	SEE PL
QUALITY L.TURNER	ENGR MGT M.HOGGES	NEXT ASSY	USED ON
		APPLICATION	

INTERPRET DIMENSIONS AND TOLERANCES IAW ANSI Y14.5M-1982
UNLESS OTHERWISE SPECIFIED DIMENSIONS ARE IN INCHES
DO NOT SCALE
TOLERANCES ON

2 PLACE	3 PLACE	ANGLES
±.02	±.010	±---

SIMILAR TO 109K136

INTERPRET DRAWING IAW DOD-STD-100

CONTR NO. DTFAWA-04-C-00067
ORIGINAL DATE 05-01-29

DRAFTER M.VANSCOY	MECH ENGR G.MENRIC
CHECKER M.VANSCOY	ELEC ENGR -----
DP TG SUPV J.MOLLER	DSGN MGT M.RILEY
CUSTOMER -----	

NORTHROP GRUMMAN CORPORATION
BALTIMORE, MARYLAND 21203

BASE SUPPORT,
REFLECTOR ASSY,
LOWER INSIDE FRONT

SIZE	CAGE CODE	DWG NO.
D	97942	135K917

SCALE NONE WEIGHT SHEET 1 OF 3

UG

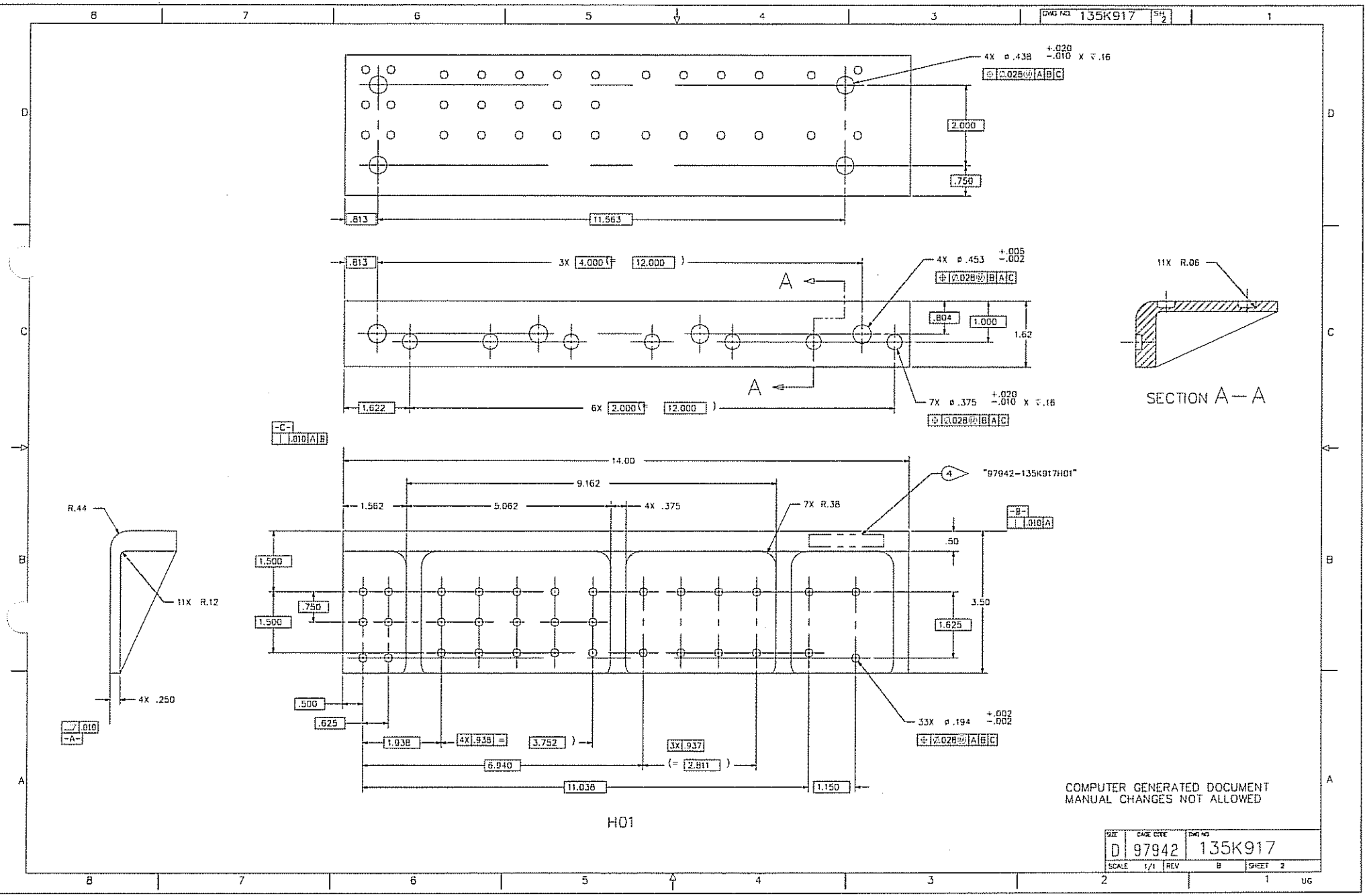
DWG NO 135K917 SH 2
4X ø .438 +.020 -.010 X ⌀.16
⊕ ⌀.028Ⓜ A B C
2.000
.750
.813
11.563
3X 4.000 (= 12.000)
4X ø .453 +.005 -.002
⊕ ⌀.028Ⓜ B A C
A
.804
1.000
1.62
A
1.622
6X 2.000 (= 12.000)
7X ø .375 +.020 -.010 X ⌀.16
⊕ ⌀.028Ⓜ B A C
11X R.06
SECTION A—A
-C-
.010 A B
14.00
9.162
1.562
5.062
4X .375
7X R.38
4
"97942-135K917H01"
-B-
.010 A
.50
3.50
1.625
1.500
.750
1.500
R.44
11X R.12
4X .250
.010
-A-
.500
.625
1.938
4X .938 =
3.752)
3X .937
6.940
(= 2.811)
11.038
1.150
33X ø .194 +.002 -.002
⊕ ⌀.028Ⓜ A B C
H01
COMPUTER GENERATED DOCUMENT
MANUAL CHANGES NOT ALLOWED
SIZE D
CAGE CODE 97942
DWG NO 135K917
SCALE 1/1
REV B
SHEET 2
UG

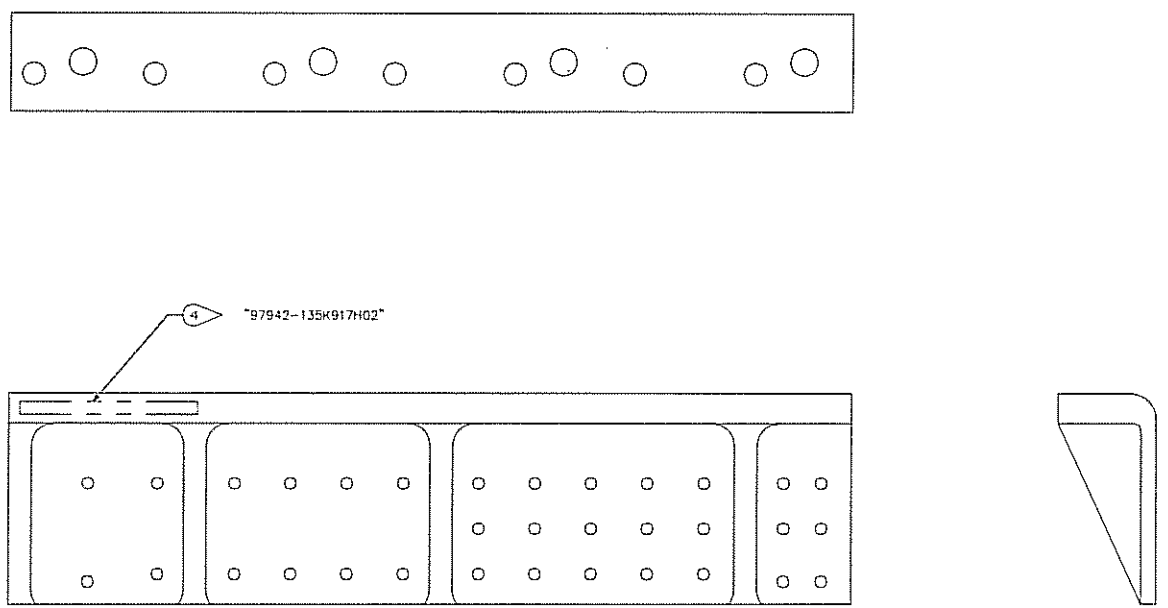

H02

SAME AS H01 EXCEPT AS
MARKED AND OPPOSITE

COMPUTER GENERATED DOCUMENT
MANUAL CHANGES NOT ALLOWED

SIZE	CAGE CODE	DWG NO
D	97942	135K917
SCALE 1/1	REV B	SHEET 3

UG

DOC NO: 135K917, REV: B, TITLE: BASE SUPPORT, REFLECTOR ASSY, LOWER INSIDE FRONT

ASSEMBLY NO.	FIND NO.	ALT/EQV	QTY	U M	CAGE CODE	PART OR IDENTIFYING NUMBER	NOMENCLATURE OR DESCRIPTION	REF DESIGNATORS	NOTE DESCRIPTION	EXTERNAL IDENTIFICATION	PL
135K917H01	001		1	IN	79500	12006CA00200040	BAR, AL, 2.00 X 4.00		(10.94 LG	AMS-QQ-A-225/8, TEM T6 OR T651	
135K917H01	001	ALT			79500	12010CC1752T	PLATE, AL, 1.75 THK		(14.00 X 3.50)	AMS-QQ-A-250/11, TEM T651	
135K917H01	100		AR		79500	83125BA	COATING, CHROMATE, ON AL COAT PER MIL-C-5541-CL1A			81349-MIL-C-5541, CL 1A	
135K917H01	101		REF		97942	PS83680PA	PAINT AND PRIMER, APPLICATION OF				
135K917H01	102		AR		97942	32235EJ	COATING PEU, ORN				
135K917H01	103		AR		97942	83869NB/4	MARKING, INK AND LABEL				
135K917H02	002		1	IN	79500	12006CA00200040	BAR, AL, 2.00 X 4.00		(10.94 LG)	AMS-QQ-A-225/8, TEM T6 OR T651	
917H02	002	ALT			79500	12010CC1752T	PLATE, AL, 1.75 THK		(14.00 X 3.50)	AMS-QQ-A-250/11, TEM T651	
135K917H02	100		AR		79500	83125BA	COATING, CHROMATE, ON AL COAT PER MIL-C-5541-CL1A			81349-MIL-C-5541, CL 1A	
135K917H02	101		REF		97942	PS83680PA	PAINT AND PRIMER, APPLICATION OF				
135K917H02	102		AR		97942	32235EJ	COATING PEU, ORN				
135K917H02	103		AR		97942	83869NB/4	MARKING, INK AND LABEL				

Notes:
Unless otherwise noted, all dimensions are in inches.
An X in the PL column indicates the existence of a separate parts list for the drawing identified in the "Part or Identifying Number" column. This information is provided for reference only

DIMENSIONS IN () ARE FOR REFERENCE ONLY

1 UNLESS OTHERWISE SPECIFIED:

BREAK ALL SHARP CORNERS AND EDGES R.03 MAX OR CHAMFER .03 X .03 MAX.

SURFACE TEXTURE OF MACHINED SURFACES TO BE 125 MICROINCHES MAX.

DIMENSIONAL LIMITS APPLY AFTER FINISHING.

2 CHROMATE COAT PER FN 100.

3 PAINT PER FN 101 USING FN 102.

MARK PER FN 103 APPROX AS SHOWN.

SHEET REVISION STATUS					
5	4	3	2	1	SHEET NO.
		A	A	A	REV

DWG NO. 135K918 SH 1 1 (20DS086)

REVISIONS				
ZONE	REV	DESCRIPTION	DATE	APPROVED
	–	DRAWING RELEASED	05-04-18	J.MOLLER
	A	SEE REV H23P9.10 ALD/ALB	05-08-10	M.OSLINBERGER

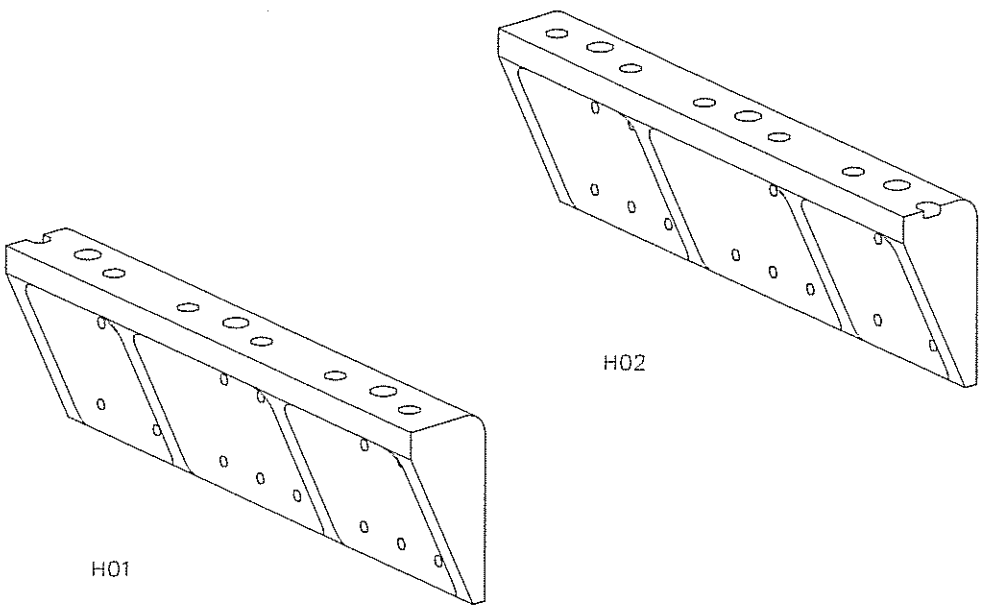

THESE VIEWS FOR REFERENCE ONLY

COMPUTER GENERATED DOCUMENT
MANUAL CHANGES NOT ALLOWED

SEE SEPARATE PARTS LIST

MFG ENGR W. MOORE	MFG DFM -----		
EM/EMC/TEMPEST -----	STRUCTURAL L.HEITZMANN		
MT LEAD A.ROBSON	ES SYS ENG -----	SEE PL	SEE PL
QUALITY L.TURNER	ENGR MGT M.HODGES	NEXT ASSY	USED ON
		APPLICATION	

INTERPRET DIMENSIONS AND TOLERANCES IAW ASME Y14.5M-1982 UNLESS OTHERWISE SPECIFIED DIMENSIONS ARE IN INCHES DO NOT SCALE

TOLERANCES ON

2 PLACE	3 PLACE	ANGLES
±.02	±.010	±---

SIMILAR TO 109K137

INTERPRET DRAWING IAW DOD-STD-100

CONTR NO. DTFAWA-04-C-00067
ORIGINAL DATE 05-01-29

DRAFTER M.VANSCOY	MECH ENGR C.KEMPIC
CHECKER M.VANSCOY	ELEC ENGR -----
CF TO SUPV J.MOLLER	DSGN MGT M.RILEY
CUSTOMER -----	

NORTHROP GRUMMAN CORPORATION
BALTIMORE, MARYLAND 21203

BASE SUPPORT,
REFLECTOR ASSY,
LOWER REAR INTERIOR

SIZE	CAGE CODE	DWG NO.
D	97942	135K918

SCALE NONE WEIGHT SHEET 1 OF 3

UG

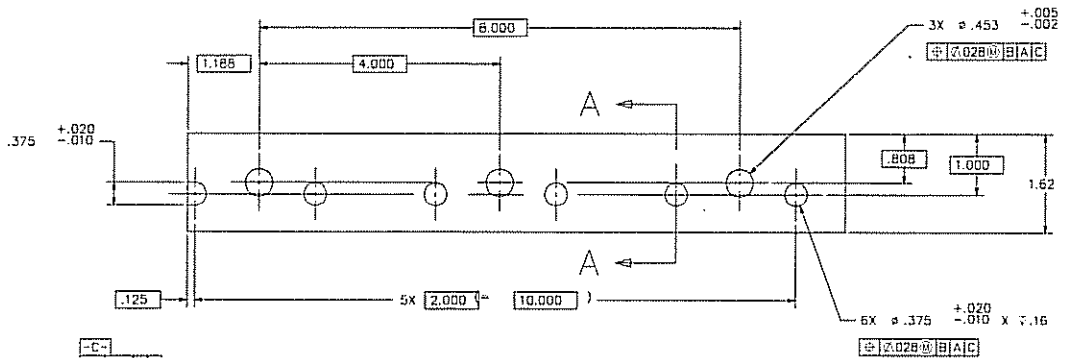

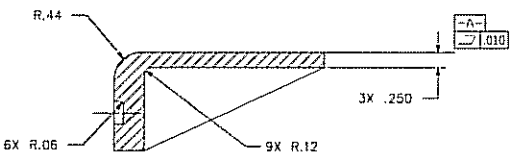

SECTION A—A

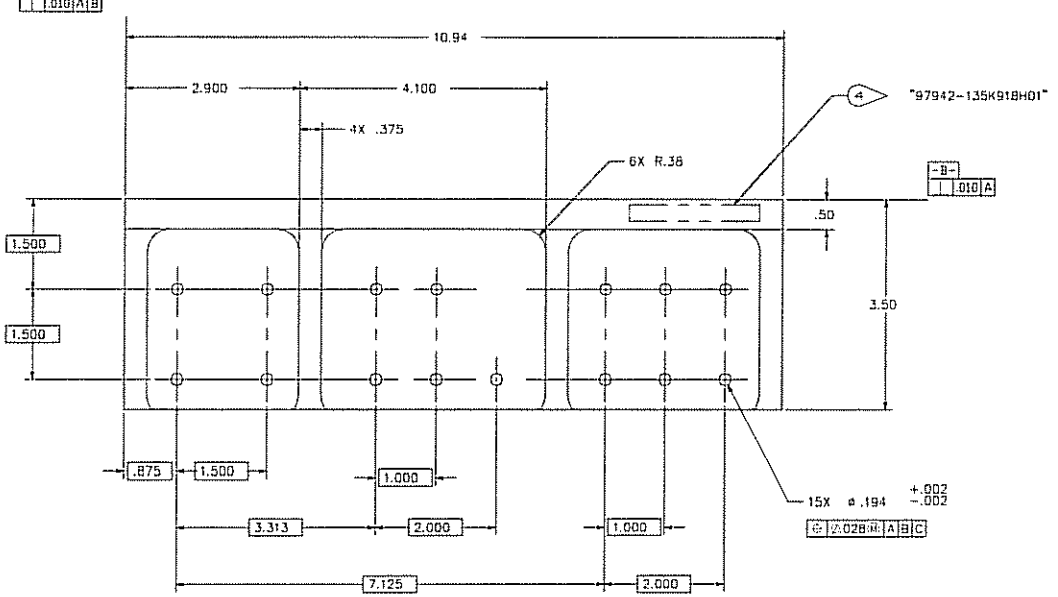

H01

COMPUTER GENERATED DOCUMENT
MANUAL CHANGES NOT ALLOWED

SIZE	CAGE CODE	DWG NO.
D	97942	135K918
SCALE 1/1	REV A	SHEET 2

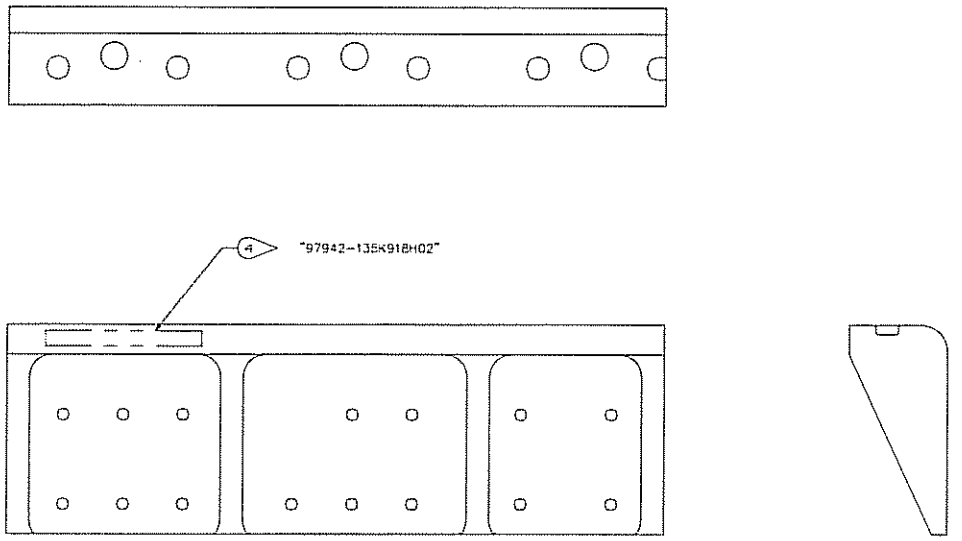

H02

SAME AS H01 EXCEPT AS
MARKED AND OPPOSITE

COMPUTER GENERATED DOCUMENT
MANUAL CHANGES NOT ALLOWED

SIZE	CAGE CODE	DWG NO
D	97942	135K918
SCALE 1/1	REV A	SHEET 3

UG

DOC NO: 135K918, REV: A, TITLE: BASE SUPPORT, REFLECTOR ASSY, LOWER REAR INTERIOR

ASSEMBLY NO.	FIND NO.	ALT/EQV	QTY	U M	CAGE CODE	PART OR IDENTIFYING NUMBER	NOMENCLATURE OR DESCRIPTION	REF DESIGNATORS	NOTE DESCRIPTION	EXTERNAL IDENTIFICATION	PL
135K918H01	001		1	IN	79500	12006CA00200040	BAR, AL, 2.00 X 4.00		(10.94 LG	AMS-QQ-A-225/8, TEM T6 OR T651	
135K918H01	001	ALT			79500	12010CC1752T	PLATE, AL, 1.75 THK		(10.94 X 3.50)	AMS-QQ-A-250/11, TEM T651	
135K918H01	100		AR		79500	83125BA	COATING, CHROMATE, ON AL COAT PER MIL-C-5541-CL1A			81349-MIL-C-5541, CL 1A	
135K918H01	101		REF		97942	PS83680PA	PAINT AND PRIMER, APPLICATION OF				
135K918H01	102		AR		97942	32235EJ	COATING PEU, ORN				
135K918H01	103		AR		97942	83869NB/4	MARKING, INK AND LABEL				
135K918H02	002		1	IN	79500	12006CA00200040	BAR, AL, 2.00 X 4.00		(10.94 LG)	AMS-QQ-A-225/8, TEM T6 OR T651	
918H02	002	ALT			79500	12010CC1752T	PLATE, AL, 1.75 THK		(10.94 X 3.50)	AMS-QQ-A-250/11, TEM T651	
135K918H02	100		AR		79500	83125BA	COATING, CHROMATE, ON AL COAT PER MIL-C-5541-CL1A			81349-MIL-C-5541, CL 1A	
135K918H02	101		REF		97942	PS83680PA	PAINT AND PRIMER, APPLICATION OF				
135K918H02	102		AR		97942	32235EJ	COATING PEU, ORN				
135K918H02	103		AR		97942	83869NB/4	MARKING, INK AND LABEL				

Notes:
Unless otherwise noted, all dimensions are in inches.
An X in the PL column indicates the existence of a separate parts list for the drawing identified in the "Part or Identifying Number" column. This information is provided for reference only

DWG NO.	SH.	
135K919	1	1 (20DS086)

SHEET REVISION STATUS

5	4	3	2	1	SHEET NO.
			A	A	REV

REVISIONS

ZONE	REV	DESCRIPTION	DATE	APPROVED
	–	DRAWING RELEASED	05-04-16	J.MOLLER
	A	ECC REV H23P9 07 APP/VLB	05-08-10	ROSENBERGER

PARENTHETIC DIMENSIONS ARE FOR REFERENCE ONLY

1 UNLESS OTHERWISE SPECIFIED:

BREAK ALL SHARP CORNERS AND EDGES R.03 MAX OR CHAMFER .03 X .03 MAX.

SURFACE TEXTURE OF MACHINED SURFACES TO BE 125 MICROINCHES MAX.

DIMENSIONAL LIMITS APPLY BEFORE FINISHING.

2 CHROMATE COAT PER FN 100.

3 PAINT PER FN 101 USING FN 102.

MARK PER FN 103 APPROX AS SHOWN.

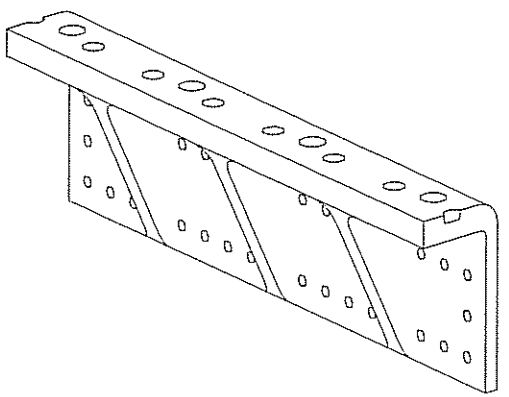

THIS VIEW FOR REFERENCE ONLY

COMPUTER GENERATED DOCUMENT
MANUAL CHANGES NOT ALLOWED
SEE SEPARATE PARTS LIST

MFG ENGR W MOORE	MFG OPN -----		
ENV/DMG/TEMPEST -----	STRUCTURAL L.HEITZMANN		
PT LEAD A.ROBSON	ES SENS ENG -----	SEE PL	SEE PL
QUALITY L.TURNER	ENGR MGT M.HODGES	NEXT ASSY	USED ON
		APPLICATION	

INTERPRET DIMENSIONS AND TOLERANCES PER ANSI Y14.5M-1982
UNLESS OTHERWISE SPECIFIED DIMENSIONS ARE IN INCHES
DO NOT SCALE
TOLERANCES ON

2 PLACE	3 PLACE	ANGLES
±.02	±.010	±---

SIMILAR TO 109K138

INTERPRET DRAWING PER DOD-STD-100

CENTER NO. DTFAWA-04-C-00067
ORIGINAL DATE 05-01-29

DRAFTER M.VANSCOY	MECH ENGR G KEMPIC
CHECKER M.VANSCOY	ELEC ENGR -----
OFFG SUPV J.MOLLER	DSGN MGT M.RILEY
CUSTOMER -----	

NORTHROP GRUMMAN CORPORATION
BALTIMORE, MARYLAND 21203

BASE SUPPORT, REFLECTOR ASSY, LOWER REAR

SIZE	CAGE CODE	DWG NO.
D	97942	135K919

SCALE NONE WEIGHT SHEET 1 OF 2

UG

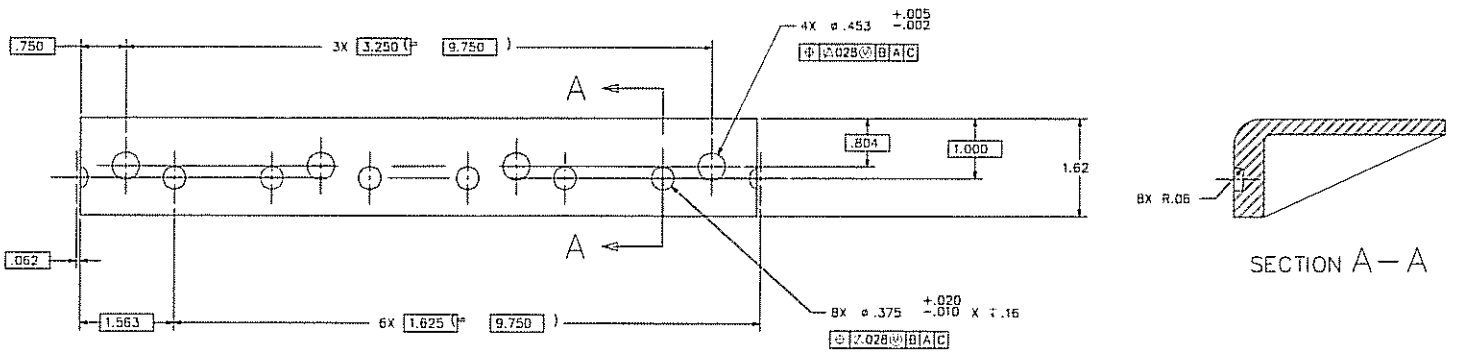

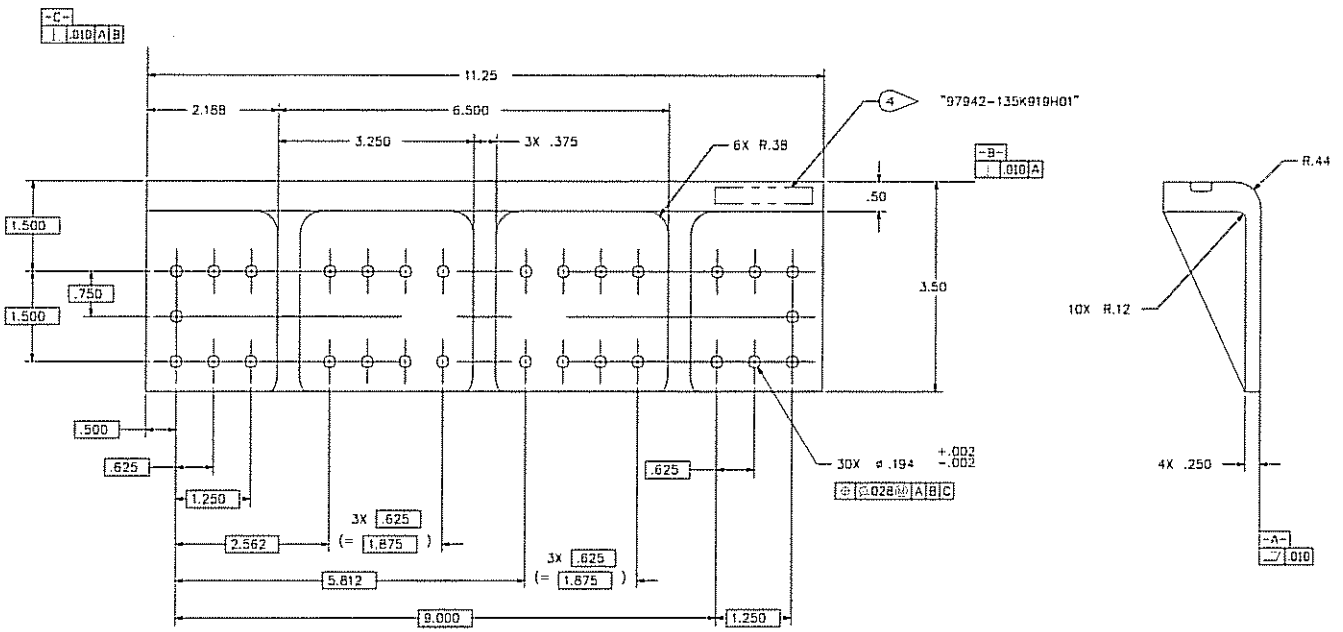

H01

COMPUTER GENERATED DOCUMENT
MANUAL CHANGES NOT ALLOWED

SIZE	CAGE CODE	DWG NO
D	97942	135K919
SCALE 1/1	REV A	SHEET 2

DOC NO: 135K919, REV: A, TITLE: BASE SUPPORT, REFLECTOR ASSY, LOWER REAR

ASSEMBLY NO.	FIND NO.	ALT/EQV	QTY	U M	CAGE CODE	PART OR IDENTIFYING NUMBER	NOMENCLATURE OR DESCRIPTION	REF DESIGNATORS	NOTE DESCRIPTION	EXTERNAL IDENTIFICATION	PL
135K919H01	001		1	IN	79500	12006CA00200040	BAR, AL, 2.00 X 4.00		(11.25 LG)	AMS-QQ-A-225/8, TEM T6 OR T651	
135K919H01	001	ALT			79500	12010CC1752T	PLATE, AL, 1.75 THK		(11.25 X 3.50)	AMS-QQ-A-250/11, TEM T651	
135K919H01	100		AR		79500	83125BA	COATING, CHROMATE, ON AL COAT PER MIL-C-5541-CL1A			81349-MIL-C-5541, CL 1A	
135K919H01	101		REF		97942	PS83680PA	PAINT AND PRIMER, APPLICATION OF				
135K919H01	102		AR		97942	32235EJ	COATING PEU, ORN				
135K919H01	103		AR		97942	83869NB/4	MARKING, INK AND LABEL				
135K919H02	002		1	IN	79500	12006CA00200040	BAR, AL, 2.00 X 4.00		(11.25 LG	AMS-QQ-A-225/8, TEM T6 OR T651	
919H02	002	ALT			79500	12010CC1752T	PLATE, AL, 1.75 THK		(11.25 X 3.50)	AMS-QQ-A-250/11, TEM T651	
135K919H02	100		AR		79500	83125BA	COATING, CHROMATE, ON AL COAT PER MIL-C-5541-CL1A			81349-MIL-C-5541, CL 1A	
135K919H02	101		REF		97942	PS83680PA	PAINT AND PRIMER, APPLICATION OF				
135K919H02	102		AR		97942	32235EJ	COATING PEU, ORN				
135K919H02	103		AR		97942	83869NB/4	MARKING, INK AND LABEL				

Notes:
Unless otherwise noted, all dimensions are in inches.
An X in the PL column indicates the existence of a separate parts list for the drawing identified in the "Part or Identifying Number" column. This information is provided for reference only

PARENTHESIS IDENTIFIES ARE FOR REFERENCE ONLY

1 UNLESS OTHERWISE SPECIFIED:

BREAK ALL SHARP CORNERS AND EDGES R.03 MAX OR CHAMFER .03 X .03 MAX.

SURFACE TEXTURE OF MACHINED SURFACES TO BE 125 MICROINCHES MAX.

DIMENSIONAL LIMITS APPLY AFTER FINISHING.

2 CHROMATE COAT PER FN 100.

3 PAINT PER FN 101 USING FN 102.

MARK PER FN 103 APPROX AS SHOWN.

SHEET REVISION STATUS					
5	4	3	2	1	SHEET NO.
		A	A	A	REV

DWG NO. 135K920 SH 1 1 (20DS086)

REVISIONS

ZONE	REV	DESCRIPTION		DATE	APPROVED
	–	DRAWING RELEASED		05-04-18	J MOLLER
	A	SEE REV H03P9.11	ALD/MJB	05-08-10	HOSENBERGER

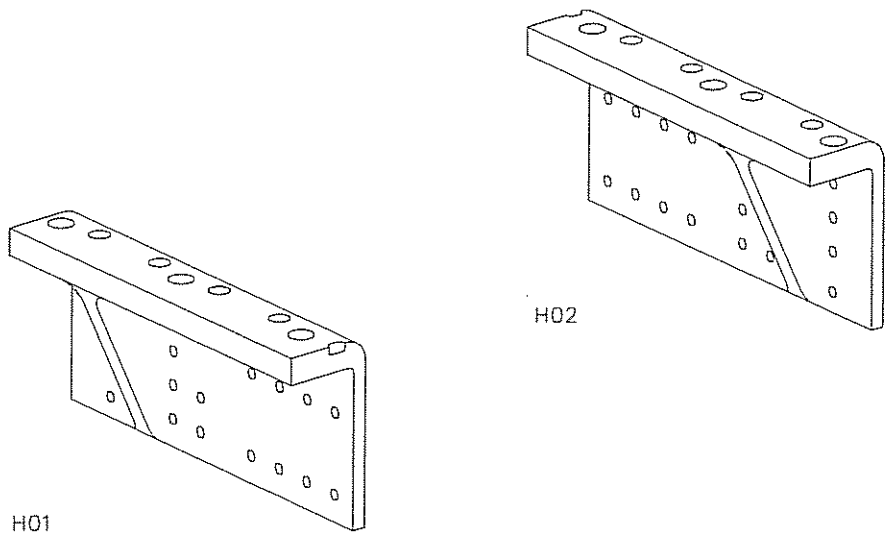

THESE VIEWS FOR REFERENCE ONLY

COMPUTER GENERATED DOCUMENT
MANUAL CHANGES NOT ALLOWED

SEE SEPARATE PARTS LIST

MFG ENGR W MOORE	MFG OPN -----		
EM/EMC/TEMPEST -----	STRUCTURAL L.HOTZMANN		
PT LEAD A.ROBSON	CS SENS ENG -----		
QUALITY L.TURNER	ENGR MGT M HODGES	SEE PL	SEE PL
		NEXT ASSY	USED ON
		APPLICATION	

INTERPRET DIMENSIONS AND TOLERANCES IAW ANSI Y14.5M-1982 UNLESS OTHERWISE SPECIFIED DIMENSIONS ARE IN INCHES DO NOT SCALE

TOLERANCES ON

2 PLACE	3 PLACE	ANGLES
±.03	±.010	±----

SIMILAR TO 109K139

INTERPRET DRAWING IAW DCD-STD-100

CONTR NO. D1FAWA-04-C-0006

ORIGINAL DATE 05-01-29

DRAFTER M.VANSCOY	MECH ENGR G KEMPC
CHECKER M.VANSCOY	ELEC ENGR -----
CP TO SUPV J MOLLER	DSGN MGT M.RILEY

CUSTOMER -----

NORTHROP GRUMMAN CORPORATION
BALTIMORE, MARYLAND 21203

BASE SUPPORT, REFLECTOR ASSY, LOWER REAR

SIZE	CAGE CODE	DWG NO.
D	97942	135K920

SCALE NONE WEIGHT SHEET 1 OF 3

UG

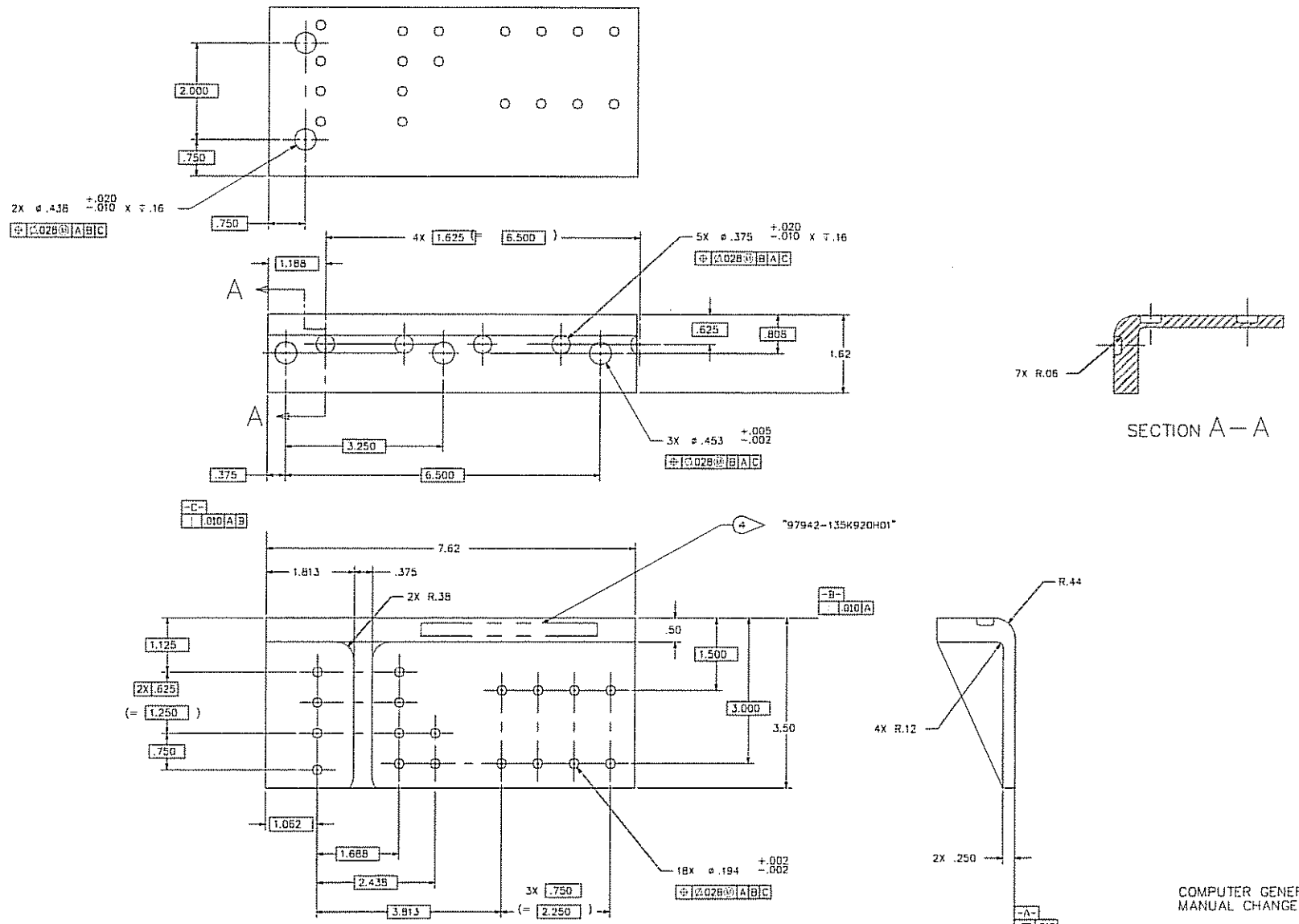

COMPUTER GENERATED DOCUMENT
MANUAL CHANGES NOT ALLOWED

SIZE	CAGE CODE	DWG NO
D	97942	135K920
SCALE 1/1	REV A	SHEET 2

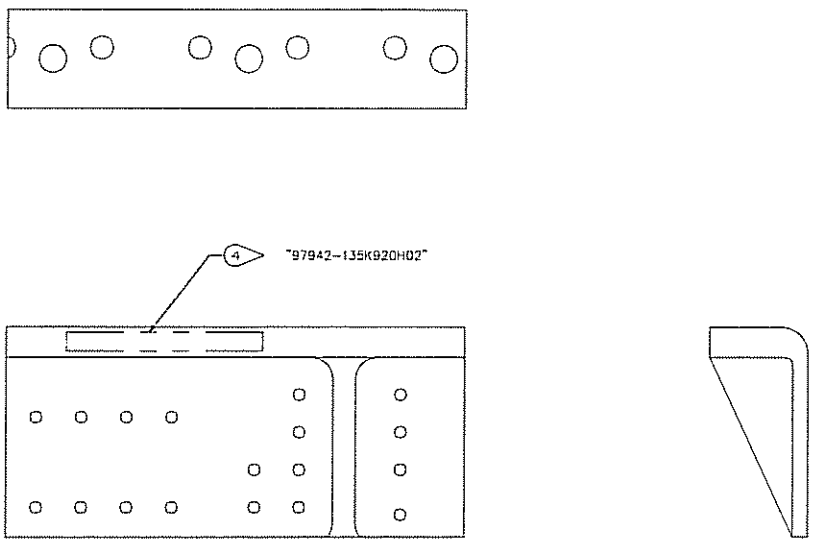

H02

SAME AS H01 EXCEPT AS
MARKED AND OPPOSITE

COMPUTER GENERATED DOCUMENT
MANUAL CHANGES NOT ALLOWED

SIZE	CAGE CODE	DWG NO.
D	97942	135K920
SCALE 1/1	REV A	SHEET 3

DOC NO: 135K920, REV: A, TITLE: BASE SUPPORT, REFLECTOR ASSY, LOWER REAR

ASSEMBLY NO.	FIND NO.	ALT/EQV	QTY	U M	CAGE CODE	PART OR IDENTIFYING NUMBER	NOMENCLATURE OR DESCRIPTION	REF DESIGNATORS	NOTE DESCRIPTION	EXTERNAL IDENTIFICATION	PL
135K920H01	001		1	IN	79500	12006CA00200040	BAR, AL, 2.00 X 4.00		(7.62 LG)	AMS-QQ-A-225/8, TEM T6 OR T651	
135K920H01	001	ALT			79500	12010CC1752T	PLATE, AL, 1.75 THK		(7.62 X 3.50)	AMS-QQ-A-250/11, TEM T651	
135K920H01	101		REF		97942	PS83680PA	PAINT AND PRIMER, APPLICATION OF				
135K920H01	102		AR		97942	32235EJ	COATING PEU, ORN				
135K920H01	103		AR		97942	83869NB/4	MARKING, INK AND LABEL				
135K920H02	002		1	IN	79500	12006CA00200040	BAR, AL, 2.00 X 4.00		(7.62 LG)	AMS-QQ-A-225/8, TEM T6 OR T651	
135K920H02	002	ALT			79500	12010CC1752T	PLATE, AL, 1.75 THK		(7.62 X 3.50)	AMS-QQ-A-250/11, TEM T651	
135K920H02	101		REF		97942	PS83680PA	PAINT AND PRIMER, APPLICATION OF				
[illegible]920H02	102		AR		97942	32235EJ	COATING PEU, ORN				
[illegible]920H02	103		AR		97942	83869NB/4	MARKING, INK AND LABEL				

Notes:
Unless otherwise noted, all dimensions are in inches.
An X in the PL column indicates the existence of a separate parts list for the drawing identified in the "Part or Identifying Number" column. This information is provided for reference only

(20DS086)

PARENTHETIC IDENTITIES ARE FOR REFERENCE ONLY

SHEET REVISION STATUS					
5	4	3	2	1	SHEET NO.
		A	A	A	REV

REVISIONS					
ZONE	REV	DESCRIPTION		DATE	APPROVED
	–	DRAWING RELEASED		05-04-16	J.MOLLER
	A	SEE REV H23P9.08	APF/VLB	05-08-10	ROSENBERGER

1 UNLESS OTHERWISE SPECIFIED:

BREAK ALL SHARP CORNERS AND EDGES R.03 MAX OR CHAMFER .03 X .03 MAX.

SURFACE TEXTURE OF MACHINED SURFACES TO BE 125 MICROINCHES MAX.

DIMENSIONAL LIMITS APPLY BEFORE FINISHING.

2 CHROMATE COAT PER FN 100.

3 PAINT PER FN 101 USING FN 102.

4 MARK PER FN 103 APPROX AS SHOWN.

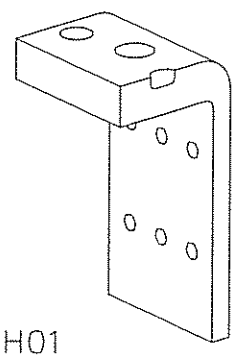

H01

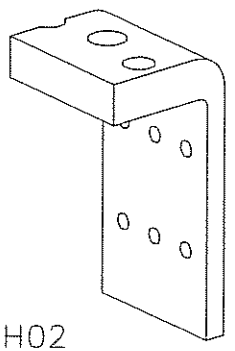

H02

THESE VIEWS FOR REFERENCE ONLY

COMPUTER GENERATED DOCUMENT
MANUAL CHANGES NOT ALLOWED

SEE SEPARATE PARTS LIST

DWG NO. 135K921 SH 1

MFG ENGR: W MOORE	MFG OPN: ------
EMI/EMC/TEMPEST: ------	STRUCTURAL: L.HEITZMANN
IPT LEAD: A.ROBSON	ES SENS DVC: ------
QUALITY: L.TURNER	ENGR MGT: M.HODGES

APPLICATION	
SEE PL	SEE PL
NEXT ASSY	USED ON

INTERPRET DIMENSIONS AND TOLERANCES IAW ANSI Y14.5M-1982 UNLESS OTHERWISE SPECIFIED DIMENSIONS ARE IN INCHES DO NOT SCALE

TOLERANCES ON		
2 PLACE	3 PLACE	ANGLES
±.02	±.010	±---

SIMILAR TO 109K140

INTERPRET DRAWING IAW DOD-STD-100

CONTR NO. DTFAWA-04-C-00067
ORIGINAL DATE 05-01-29

DRAFTER: M.VANSCOY	MECH ENGR: G KEMPIC
CHECKER: M.VANSCOY	ELEC ENGR: ------
DFTG SUPV: J.MOLLER	DSGN MGT: M.RILEY
CUSTOMER: ---------	

NORTHROP GRUMMAN CORPORATION
BALTIMORE, MARYLAND 21203

BASE SUPPORT, REFLECTOR ASSY, LOWER FRONT EXTERIOR

SIZE	CAGE CODE	DWG NO
C	97942	135K921

SCALE NONE | WEIGHT | SHEET 1 OF 3

UG

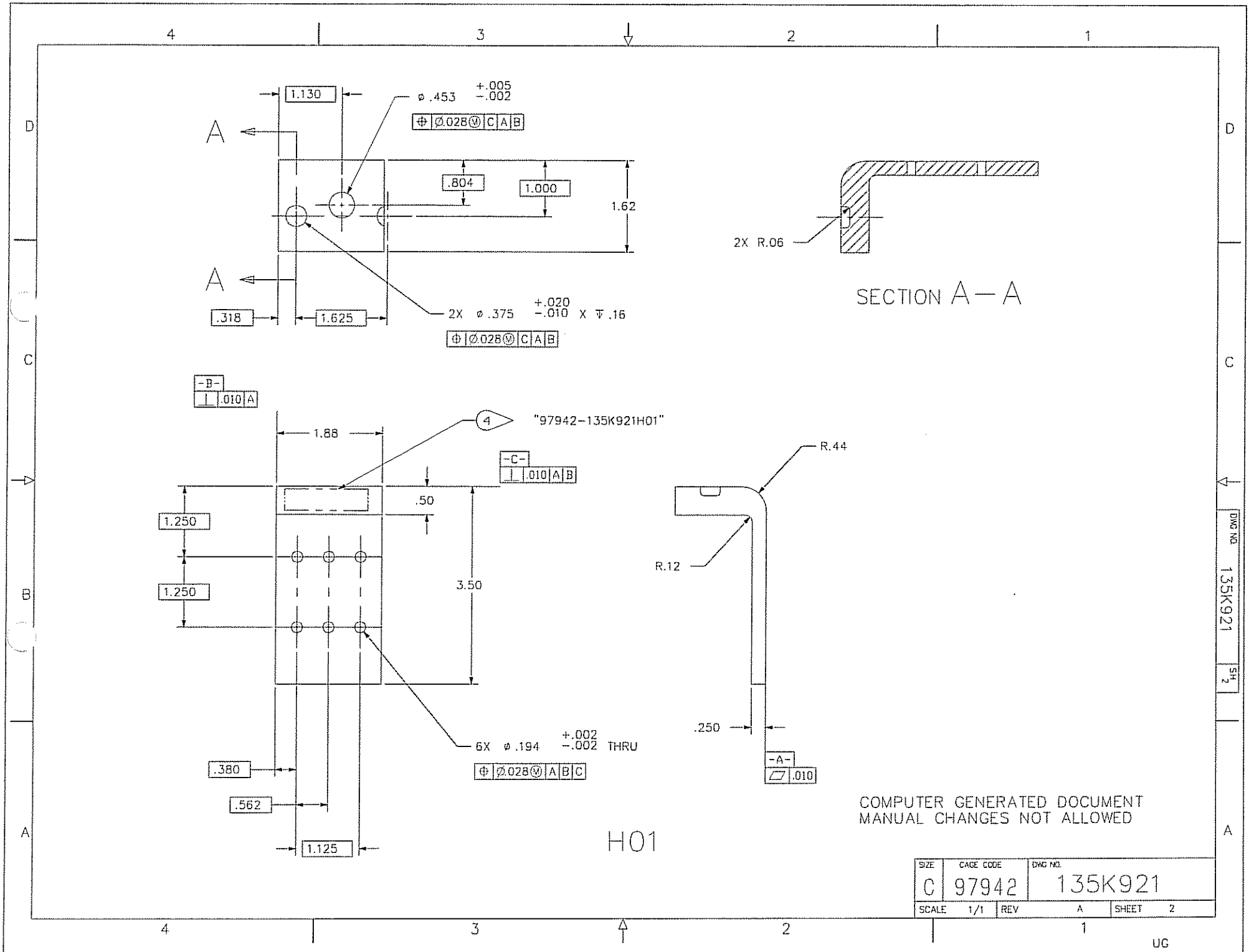
1.130
ø .453 +.005 -.002
⊕ Ø.028Ⓜ C A B
A
.804
1.000
1.62
A
.318
1.625
2X ø .375 +.020 -.010 X ↧ .16
⊕ Ø.028Ⓜ C A B
2X R.06
SECTION A—A
-B-
⊥ .010 A
1.88
4
"97942-135K921H01"
-C-
⊥ .010 A B
.50
1.250
1.250
3.50
6X ø .194 +.002 -.002 THRU
⊕ Ø.028Ⓜ A B C
.380
.562
1.125
R.44
R.12
.250
-A-
▱ .010
H01
COMPUTER GENERATED DOCUMENT
MANUAL CHANGES NOT ALLOWED
SIZE C
CAGE CODE 97942
DWG NO. 135K921
SCALE 1/1
REV A
SHEET 2
DWG NO. 135K921
SH 2
UG

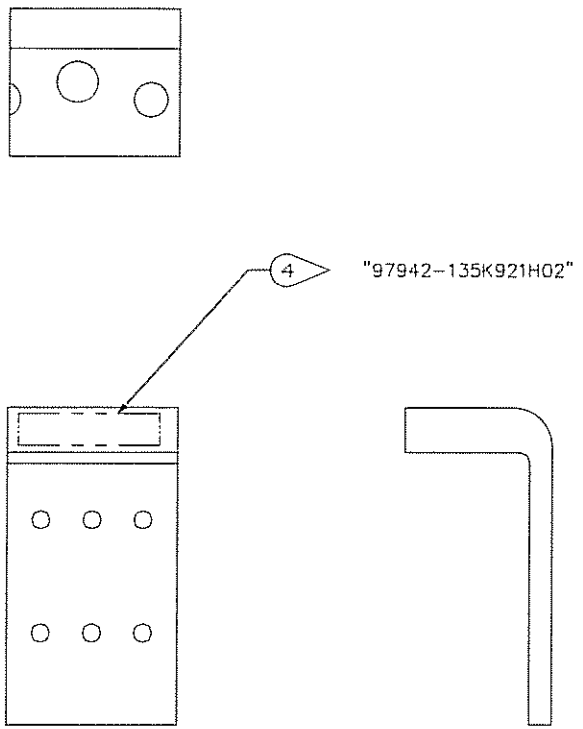

H02

SAME AS H01 EXCEPT AS
MARKED AND OPPOSITE

COMPUTER GENERATED DOCUMENT
MANUAL CHANGES NOT ALLOWED

SIZE	CAGE CODE	DWG NO.	
C	97942	135K921	
SCALE 1/1	REV A	SHEET 3	

DWG NO. 135K921 SH 3

UG

DOC NO: 135K921, REV: A, TITLE: BASE SUPPORT, REFLECTOR ASSY, LOWER FRONT EXTERIOR

ASSEMBLY NO.	FIND NO.	ALT/EQV	QTY	U M	CAGE CODE	PART OR IDENTIFYING NUMBER	NOMENCLATURE OR DESCRIPTION	REF DESIGNATORS	NOTE DESCRIPTION	EXTERNAL IDENTIFICATION	PL
135K921H01	001		1	IN	79500	12006CA00200040	BAR, AL, 2.00 X 4.00		(1.88 LG)	AMS-QQ-A-225/8, TEM T6 OR T651	
135K921H01	001	ALT			79500	12010CC1752T	PLATE, AL, 1.75 THK		(1.88 X 3.50)	AMS-QQ-A-250/11, TEM T651	
135K921H01	100		AR		79500	83125BA	COATING, CHROMATE, ON AL COAT PER MIL-C-5541-CL1A			81349-MIL-C-5541, CL 1A	
135K921H01	101		REF		97942	PS83680PA	PAINT AND PRIMER, APPLICATION OF				
135K921H01	102		AR		97942	32235EJ	COATING PEU, ORN				
135K921H01	103		AR		97942	83869NB/4	MARKING, INK AND LABEL				
135K921H02	002		1	IN	79500	12006CA00200040	BAR, AL, 2.00 X 4.00		(1.88 LG)	AMS-QQ-A-225/8, TEM T6 OR T651	
921H02	002	ALT			79500	12010CC1752T	PLATE, AL, 1.75 THK		(1.88 X 3.50)	AMS-QQ-A-250/11, TEM T651	
135K921H02	100		AR		79500	83125BA	COATING, CHROMATE, ON AL COAT PER MIL-C-5541-CL1A			81349-MIL-C-5541, CL 1A	
135K921H02	101		REF		97942	PS83680PA	PAINT AND PRIMER, APPLICATION OF				
135K921H02	102		AR		97942	32235EJ	COATING PEU, ORN				
135K921H02	103		AR		97942	83869NB/4	MARKING, INK AND LABEL				

Notes:
Unless otherwise noted, all dimensions are in inches.
An X in the PL column indicates the existence of a separate parts list for the drawing identified in the "Part or Identifying Number" column. This information is provided for reference only

(20DS086)

PARENTHETIC IDENTITIES ARE FOR REFERENCE ONLY

1 UNLESS OTHERWISE SPECIFIED:

BREAK ALL SHARP CORNERS AND EDGES R.03 MAX OR CHAMFER .03 X .03 MAX.

SURFACE TEXTURE OF MACHINED SURFACES TO BE 125 MICROINCHES MAX.

DIMENSIONAL LIMITS APPLY BEFORE FINISHING.

2 CHROMATE COAT PER FN 100.

3 PAINT PER FN 101 USING FN 102.

4 MARK PER FN 103 APPROX AS SHOWN.

SHEET REVISION STATUS					
5	4	3	2	1	SHEET NO.
			B	B	REV

REVISIONS					
ZONE	REV	DESCRIPTION		DATE	APPROVED
	–	DRAWING RELEASED		05-04-	6J.MOLLER
PL	A	SEE REV G85T7			
	B	SEE REV H23P9.09	ALD/VLB	05-08-10	ROSENBERGER

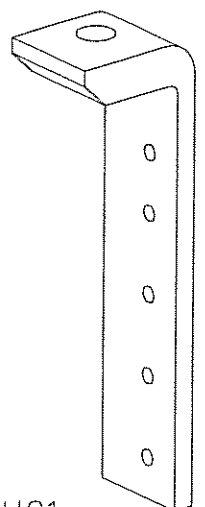

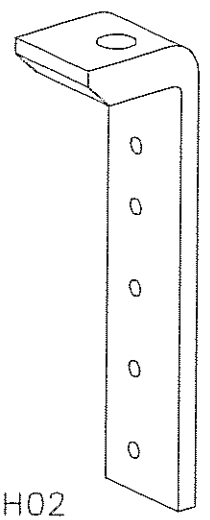

THESE VIEWS FOR REFERENCE ONLY

COMPUTER GENERATED DOCUMENT
MANUAL CHANGES NOT ALLOWED

SEE SEPARATE PARTS LIST

DWG NO. 135K922 SH 1

MFG ENGR: W MOORE	MFG OPN: ------
EMI/EMC/TEMPEST: ------	STRUCTURAL: L.HEITZMANN
PT LEAD: A.ROBSON	ES SENS DVC: ------
QUALITY: L.TURNER	ENGR MGT: M.HODGES

APPLICATION	
SEE PL	SEE PL
NEXT ASSY	USED ON

INTERPRET DIMENSIONS AND TOLERANCES IAW ANSI Y14.5M-1982
UNLESS OTHERWISE SPECIFIED DIMENSIONS ARE IN INCHES
DO NOT SCALE
TOLERANCES ON:

2 PLACE	3 PLACE	ANGLES
±.02	±.010	±---

SIMILAR TO 109K141

INTERPRET DRAWING IAW DOD-STD-100

CONTR NO. DTFAWA-04-C-00067	
ORIGINAL DATE 05-01-29	
DRAFTER: M.VANSCOY	MECH ENGR: G KEMPIC
CHECKER: M.VANSCOY	ELEC ENGR: ------
DFTG SUPV: J.MOLLER	DSGN MGT: M.RILEY
CUSTOMER: ---------	

NORTHROP GRUMMAN CORPORATION
BALTIMORE, MARYLAND 21203

BASE SUPPORT, REFLECTOR ASSY,LOWER REAR INSIDE CORNER

SIZE	CAGE CODE	DWG NO.
C	97942	135K922

SCALE NONE | WEIGHT | SHEET 1 OF 2

UG

DOC NO: 135K922, REV: B, TITLE: BASE SUPPORT, REFLECTOR ASSY, LOWER REAR INSIDE CORNER

ASSEMBLY NO.	FIND NO.	ALT/EQV	QTY	U M	CAGE CODE	PART OR IDENTIFYING NUMBER	NOMENCLATURE OR DESCRIPTION	REF DESIGNATORS	NOTE DESCRIPTION	EXTERNAL IDENTIFICATION	PL
135K922H01	001		1	EA	79500	12006CA1752S	BAR, AL, 1.75 SQ			AMS-QQ-A-225/8, TEM T6 OR T651	
135K922H01	001	ALT			79500	12010CC1752T	PLATE, AL, 1.75 THK			AMS-QQ-A-250/11, TEM T651	
135K922H01	100		AR		79500	83125BA	COATING, CHROMATE, ON AL COAT PER MIL-C-5541-CL1A			81349-MIL-C-5541, CL 1A	
135K922H01	101		REF		97942	PS83680PA	PAINT AND PRIMER, APPLICATION OF				
135K922H01	102		AR		97942	32235EJ	COATING PEU, ORN				
135K922H01	103		AR		97942	83869NB/4	MARKING, INK AND LABEL				
135K922H02	002		1	EA	79500	12006CA1752S	BAR, AL, 1.75 SQ			AMS-QQ-A-225/8, TEM T6 OR T651	
922H02	002	ALT			79500	12010CC1752T	PLATE, AL, 1.75 THK			AMS-QQ-A-250/11, TEM T651	
135K922H02	100		AR		79500	83125BA	COATING, CHROMATE, ON AL COAT PER MIL-C-5541-CL1A			81349-MIL-C-5541, CL 1A	
135K922H02	101		REF		97942	PS83680PA	PAINT AND PRIMER, APPLICATION OF				
135K922H02	102		AR		97942	32235EJ	COATING PEU, ORN				
135K922H02	103		AR		97942	83869NB/4	MARKING, INK AND LABEL				

Notes:
Unless otherwise noted, all dimensions are in inches.
An X in the PL column indicates the existence of a separate parts list for the drawing identified in the "Part or Identifying Number" column. This information is provided for reference only

SH 1	PARENTHETIC IDENTITIES ARE FOR REFERENCE ONLY REVISION STATUS OF ALL SHEETS IS IDENTICAL
DWG NO. 32235EJ	

REVISIONS

REV	DESCRIPTION	DATE	APPROVAL
F	SEE REV H44G6	09/29/2005	R RECKLING

SEE LAST SHEET FOR REVISION HISTORY

APPROVALS	
FUNCTION	NAME
ORIGINATOR	LOADED DATA

MATERIAL CARD

COMPUTER GENERATED DOCUMENT MANUAL CHANGES NOT ALLOWED	UNLESS OTHERWISE SPECIFIED DIMENSIONS ARE IN INCHES

NORTHROP GRUMMAN CORPORATION
BALTIMORE, MARYLAND 21203 USA

TITLE:
ENAMEL, ORANGE, AIRDRYING, POLYURETHANE, MIL-C-85285, TYPE I, 12197

SIZE	CAGE CODE	DRAWING NO.	REV
A	97942	32235EJ	F

SCALE: NONE	SHEET 1 OF 4

DOCUMENT BUILT ON 09/29/2005 AT 07:26:09

1. APPROVED SUPPLIERS AND MANUFACTURERS

Manufacturer is defined as the fabricator of the material or product listed in Section 2, Ordering Information, below. The manufacturer may be a supplier if the product is procured from them. All other suppliers are distributors, and the words are synonymous. The manufacturer's CAGE code shown below is for reference only. Other CAGE codes for the manufacturer specified are also acceptable. Open Market indicates that any manufacturer of the material or product listed in Section 2, Ordering Information, is acceptable.

06367 - CROWN METRO INC
ECHELON RD DONALDSON CENTER, GREENVILLE, SC 29606

33461 - DEFT INC CHEMICAL COATING DIV
17451 VON KARMAN AVE, IRVINE, CA 92614

85570 - P R C - DE SOTO INTERNATIONAL INC DBA P P G AEROSPACE
11601 UNITED ST, MOJAVE, CA 93501-7048

98502 - AKZO COATINGS INC AEROSPACE FINISHES DIV
434 W MEATS ST, ORANGE, CA 92665

023N2 - SHERWIN-WILLIAMS CO
4028 E BROAD ST, COLUMBUS, OH 43213

Distributors

2. ORDERING INFORMATION

Polyurethane Enamel per MIL-PRF-85285, Type I, Color 12197

This part is shelf life sensitive. Mark item packaging and shipping packaging with supplier CAGE code, part number, material number, and storage temperature per Section 4, Shelf Life Information, below. The material storage and control requirements listed in Section 4, Shelf Life Information, below are for Northrop Grumman internal use. The Section 4 storage conditions are preferred, however the material manufacturer's recommended storage conditions may be used for material control at facilities other than Northrop Grumman. The purchase order note "remaining shelf life requirement" shall be based on the shelf life at the storage temperature used.

3. MATERIAL DESCRIPTION AND CHARACTERISTICS

This section contains typical manufacturer technical data sheet information and is for reference only, unless Section 2, Ordering Information, requires ordering to these specific characteristics.

Orange, two part, high solids, VOC compliant, airdrying polyurethane enamel per MIL-PRF-85285, Type I, Color 12197 per FED-STD-595.
Mil Spec Kit

Size Code	Size Designation	Kit Size
00U	1	2 quart (1.89 L)
00W	2	2 gallons (7.57 L)
01M	3	10 gallons (37.85 L)
0FU	4	10 gallons (416.35 L)
00S	5	1 pint (0.47 L)
00T	6	1 quart (0.95 L)

4. **SHELF LIFE INFORMATION (For Northrop Grumman internal use only)**

Calculated From:
Date of Receipt
The original equipment manufacturer's (OEM) "Date of Shipment" is the same as the "Date of Receipt" and applies to receipt from the OEM. Distributors shall mark either the OEM Date of Shipment or their Date of Receipt from the OEM, on the shipping container, item packaging, and shipping document.

Duration:
36 Months

Storage Conditions:
ambient shop temperature

Cumulative Out Time:
Not Applicable

Shelf Life Extension Notes
The shelf life of the material may be extended by Materials and Processes. The material shall be evaluated in accordance with the test procedures described in Drawing 586R802, "Shelf Life Guidelines and Test Procedures". Alternative evaluation methods as described in the drawing may be used at the discretion of the Materials and Processes Engineer.

Test Procedures
Alternate evaluation methods as described in the drawing may be used at the discretion of the Materials Engineer.

Tested Properties

Not Applicable

Additional Information

5. **CERTIFICATE OF CONFORMANCE**

Not Applicable

6. SCOPE OF CERTIFICATION

Not Applicable

7. CAUTION INFORMATION

(For internal use only)
Refer to Title 49 Code of Federal Regulations.

Flammable. Keep sparks and flames away. Eye and skin irritant. Avoid breathing vapor, mist and dust. Use only with adequate ventilation. Avoid skin contact. Maintain manufacturer's label and review applicable MSDS.

8. REVISION HISTORY

REVISION	DESCRIPTION	DATE	APPROVAL
A	REVISED	03/07/1994	
B	REVISED	05/10/1994	
C	REVISED	08/27/1997	
D	SEE REV C69U8.00	04/11/2002	M A RABIN
E	SEE REV C97T1.00	07/10/2002	M A RABIN
E	REISSUED	05/20/2005	
F	SEE REV H44G6.00	09/29/2005	R W RECKLING

SH 1	PARENTHETIC IDENTITIES ARE FOR REFERENCE ONLY REVISION STATUS OF ALL SHEETS IS IDENTICAL	REVISIONS			
		REV	DESCRIPTION	DATE	APPROVAL
DWG NO. 53320LG		M	SEE REV C81E0	05/20/2002	M RABIN
		SEE LAST SHEET FOR REVISION HISTORY			

APPROVALS		MATERIAL CARD	
FUNCTION	NAME	COMPUTER GENERATED DOCUMENT MANUAL CHANGES NOT ALLOWED	UNLESS OTHERWISE SPECIFIED DIMENSIONS ARE IN INCHES
ORIGINATOR	LOADED DATA		

NORTHROP GRUMMAN CORPORATION
BALTIMORE, MARYLAND 21203 USA

TITLE: ADHESIVE, EPOXY

SIZE	CAGE CODE	DRAWING NO.	REV
A	79500	53320LG	M

SCALE: NONE | SHEET 1 OF 4

DOCUMENT BUILT ON 05/21/2005 AT 12:10:57

1. APPROVED SUPPLIERS AND MANUFACTURERS

Manufacturer is defined as the fabricator of the material or product listed in Section 2, Ordering Information, below. The manufacturer may be a supplier if the product is procured from them. All other suppliers are distributors, and the words are synonymous. The manufacturer's CAGE code shown below is for reference only. Other CAGE codes for the manufacturer specified are also acceptable. Open Market indicates that any manufacturer of the material or product listed in Section 2, Ordering Information, is acceptable.

0WJ98 - 3M CO INFUSION THERAPY DIV
3M CTR BLDG 275-5E-01, SAINT PAUL, MN 55144-1000

X1242 - ARNOLD FACTORY SUPPLIES, (USE 4B057)
3101 WASHINGTON BLVD, BALTIMORE, MD 21230-1093

Distributors

2. ORDERING INFORMATION

Scotchweld 2216B/A Gray (1)

This part is shelf life sensitive. Mark item packaging and shipping packaging with supplier CAGE code, part number, material number, and storage temperature per Section 4, Shelf Life Information, below. The material storage and control requirements listed in Section 4, Shelf Life Information, below are for Northrop Grumman internal use. The Section 4 storage conditions are preferred, however the material manufacturer's recommended storage conditions may be used for material control at facilities other than Northrop Grumman. The purchase order note "remaining shelf life requirement" shall be based on the shelf life at the storage temperature used.

3. MATERIAL DESCRIPTION AND CHARACTERISTICS

This section contains typical manufacturer technical data sheet information and is for reference only, unless Section 2, Ordering Information, requires ordering to these specific characteristics.

Two part, gray epoxy resin structural adhesive.

Off-white epoxy resin and medium gray modified amine hardener are

put up in tubes. Mix in ratio of 5 parts resin to 7 parts

catalyst (by wt) or 2 parts resin to 3 parts catalyst (by vol).

Pot life 1 hr. Develops full strength at ambient

temperature in

24 hours or 2 hours at 150 +/- 3 F (66 +/-1.7 C)..

4. SHELF LIFE INFORMATION (For Northrop Grumman internal use only)

Calculated From:
Date of Receipt
The original equipment manufacturer's (OEM) "Date of Shipment" is the same as the "Date of Receipt" and applies to receipt from the OEM. Distributors shall mark either the OEM Date of Shipment or their Date of Receipt from the OEM, on the shipping container, item packaging, and shipping document.

Duration:
12 Months

Storage Conditions:
ambient shop temperature

Cumulative Out Time:
Not Applicable

Shelf Life Extension Notes
The shelf life of the material may be extended by Materials and Processes. The material shall be evaluated in accordance with the test procedures described in Drawing 586R802, "Shelf Life Guidelines and Test Procedures". Alternative evaluation methods as described in the drawing may be used at the discretion of the Materials and Processes Engineer.

Test Procedures
Alternate evaluation methods as described in the drawing may be used at the discretion of the Materials Engineer.

Tested Properties

None

Additional Information

None

5. CERTIFICATE OF CONFORMANCE

See CMD Procedure No.P336 Vendor Compliance Requirements (VCR).

6. SCOPE OF CERTIFICATION

Not Applicable

7. CAUTION INFORMATION

(For internal use only)
Refer to Title 49 Code of Federal Regulations.

Avoid breathing vapor or fume. Use only with adequate ventilation. Avoid skin contact.
See Precautionary Label 35819, and applicable MSDS.

8. REVISION HISTORY

REVISION	DESCRIPTION	DATE	APPROVAL
F	REVISED	07/20/1986	
G	REVISED	08/05/1989	
H	REVISED	03/01/1991	
J	REVISED	07/02/1991	
K	REVISED	03/17/1998	
L	REVISED	09/18/2000	
M	SEE REV C81E0.00	05/20/2002	M A RABIN
M	REISSUED	05/20/2005	

SH 1	PARENTHETIC IDENTITIES ARE FOR REFERENCE ONLY REVISION STATUS OF ALL SHEETS IS IDENTICAL	REVISIONS			
		REV	DESCRIPTION	DATE	APPROVAL
DWG NO. 53352CS		B	SEE REV C81R2	05/16/2002	M RABIN
		SEE LAST SHEET FOR REVISION HISTORY			

APPROVALS		MATERIAL CARD	
FUNCTION	NAME	COMPUTER GENERATED DOCUMENT MANUAL CHANGES NOT ALLOWED	UNLESS OTHERWISE SPECIFIED DIMENSIONS ARE IN INCHES
ORIGINATOR	LOADED DATA		

NORTHROP GRUMMAN CORPORATION
BALTIMORE, MARYLAND 21203 USA

TITLE:
SEALANT, CORROSION INHIBITANT

SIZE	CAGE CODE	DRAWING NO.	REV
A	97942	53352CS	B

SCALE: NONE | SHEET 1 OF 4

DOCUMENT BUILT ON 05/21/2005 AT 12:59:15

1. APPROVED SUPPLIERS AND MANUFACTURERS

Manufacturer is defined as the fabricator of the material or product listed in Section 2, Ordering Information, below. The manufacturer may be a supplier if the product is procured from them. All other suppliers are distributors, and the words are synonymous. The manufacturer's CAGE code shown below is for reference only. Other CAGE codes for the manufacturer specified are also acceptable. Open Market indicates that any manufacturer of the material or product listed in Section 2, Ordering Information, is acceptable.

85570 - P R C - DE SOTO INTERNATIONAL INC DBA P P G AEROSPACE
11601 UNITED ST, MOJAVE, CA 93501-7048

Distributors

2. ORDERING INFORMATION

Pro Seal 870 Class C-12 Kit

This part is shelf life sensitive. Mark item packaging and shipping packaging with supplier CAGE code, part number, material number, and storage temperature per Section 4, Shelf Life Information, below. The material storage and control requirements listed in Section 4, Shelf Life Information, below are for Northrop Grumman internal use. The Section 4 storage conditions are preferred, however the material manufacturer's recommended storage conditions may be used for material control at facilities other than Northrop Grumman. The purchase order note "remaining shelf life requirement" shall be based on the shelf life at the storage temperature used.

3. MATERIAL DESCRIPTION AND CHARACTERISTICS

This section contains typical manufacturer technical data sheet information and is for reference only, unless Section 2, Ordering Information, requires ordering to these specific characteristics.

Gray two part magnesium dioxide polysulfide compound.

The base compound consist of calcium carbonate, toluene, and titanium dioxide.

Specific gravity 1.43. The accelerator consist of manganese dioxide, manganese

chromate and hydrogenated terphenyl. Specific gravity 1.801.

4. SHELF LIFE INFORMATION (For Northrop Grumman internal use only)

Calculated From:
Date of Receipt
The original equipment manufacturer's (OEM) "Date of Shipment" is the same as the "Date of Receipt" and applies to receipt from the OEM. Distributors shall mark either the OEM Date of Shipment or their Date of Receipt from the OEM, on the shipping container, item packaging, and shipping document.

Duration:
12 Months

Storage Conditions:
ambient shop temperature

Cumulative Out Time:
Not Applicable

Shelf Life Extension Notes
The shelf life of the material may be extended by Materials and Processes. The material shall be evaluated in accordance with the test procedures described in Drawing 586R802, "Shelf Life Guidelines and Test Procedures". Alternative evaluation methods as described in the drawing may be used at the discretion of the Materials and Processes Engineer.

Test Procedures
Alternate evaluation methods as described in the drawing may be used at the discretion of the Materials Engineer.

Tested Properties

None

Additional Information

None

5. CERTIFICATE OF CONFORMANCE

See CMD Procedure No.P336 Vendor Compliance Requirements (VCR).

6. SCOPE OF CERTIFICATION

Not Applicable

7. CAUTION INFORMATION

(For internal use only)
Refer to Title 49 Code of Federal Regulations.

Avoid eye and skin contact. Avoid breathing of vapors. See applicable MSDS. Maintain manufacturer's label.

DWG
NO.
5
3
3
5
2
C
S

8. REVISION HISTORY

REVISION	DESCRIPTION	DATE	APPROVAL
A	REVISED	01/28/2000	
B	SEE REV C81R2.00	05/16/2002	M A RABIN
B	REISSUED	05/20/2005	

SIZE	CAGE CODE	DRAWING NO.	REV
A	97942	53352CS	B
SCALE: NONE		SHEET 4 OF 4	

SH 1	PARENTHETIC IDENTITIES ARE FOR REFERENCE ONLY REVISION STATUS OF ALL SHEETS IS IDENTICAL
DWG NO. 53701WS	

REVISIONS

REV	DESCRIPTION	DATE	APPROVAL
K	REVISED	12/05/1991	

SEE LAST SHEET FOR REVISION HISTORY

APPROVALS	
FUNCTION	NAME
ORIGINATOR	LOADED DATA

MATERIAL CARD

COMPUTER GENERATED DOCUMENT MANUAL CHANGES NOT ALLOWED	UNLESS OTHERWISE SPECIFIED DIMENSIONS ARE IN INCHES

NORTHROP GRUMMAN CORPORATION
BALTIMORE, MARYLAND 21203 USA

TITLE:
COMPOUND, ANTISEIZE

SIZE	CAGE CODE	DRAWING NO.	REV
A	79500	53701WS	K

SCALE: NONE | SHEET 1 OF 3

DOCUMENT BUILT ON 05/21/2005 AT 17:08:38

1. **APPROVED SUPPLIERS AND MANUFACTURERS**

Manufacturer is defined as the fabricator of the material or product listed in Section 2, Ordering Information, below. The manufacturer may be a supplier if the product is procured from them. All other suppliers are distributors, and the words are synonymous. The manufacturer's CAGE code shown below is for reference only. Other CAGE codes for the manufacturer specified are also acceptable. Open Market indicates that any manufacturer of the material or product listed in Section 2, Ordering Information, is acceptable.

05972 - HENKEL LOCTITE CORP
1001 TROUT BROOK CROSSING, ROCKY HILL, CT 06067-3582

Distributors

2. **ORDERING INFORMATION**

Antiseize 767 (1)

Permanently mark all containers with ES Material Identification Number.

3. **MATERIAL DESCRIPTION AND CHARACTERISTICS**

This section contains typical manufacturer technical data sheet information and is for reference only, unless Section 2, Ordering Information, requires ordering to these specific characteristics.

Silver colored antiseize compound in bulk or aerosol. Contains petroleum base mineral oil, graphite and aluminum flakes. Contains no solvents in bulk form. Aerosol contains methylene chloride. Viscosity 175,000 cP. (Brookfeld RVT with Helix TD spindle at 5 RPM). Temperature Range -54 to 870 C (-65 to 1600 F). Sp Gr 1.06. Lubricity "K" factor 0.16. Coefficient of friction at 760 C (1400 F) 0.17. Meets MIL-A-907. Does not contain halogen, molybdenum disulfide or similar additives.

4. SHELF LIFE INFORMATION (For Northrop Grumman internal use only)

Not Applicable

Tested Properties

Not Applicable

Additional Information

Not Applicable

5. CERTIFICATE OF CONFORMANCE

Not Applicable

6. SCOPE OF CERTIFICATION

Not Applicable

7. CAUTION INFORMATION

(For internal use only)
Refer to Title 49 Code of Federal Regulations.

Avoid prolonged or repeated skin contact.
See Precautionary Label 35815, and applicable MSDS.

8. REVISION HISTORY

REVISION	DESCRIPTION	DATE	APPROVAL
J	REVISED	11/07/1990	
K	REVISED	12/05/1991	
K	REISSUED	05/20/2005	

SH 1	PARENTHETIC IDENTITIES ARE FOR REFERENCE ONLY REVISION STATUS OF ALL SHEETS IS IDENTICAL	REVISIONS			
		REV	DESCRIPTION	DATE	APPROVAL
DWG NO. 83125BB		C	REVISED	08/16/1999	
		SEE LAST SHEET FOR REVISION HISTORY			

APPROVALS		MATERIAL CARD	
FUNCTION	NAME	COMPUTER GENERATED DOCUMENT MANUAL CHANGES NOT ALLOWED	UNLESS OTHERWISE SPECIFIED DIMENSIONS ARE IN INCHES
ORIGINATOR	LOADED DATA		

NORTHROP GRUMMAN CORPORATION
BALTIMORE, MARYLAND 21203 USA

TITLE:
CHEMICAL CONVERSION COATING

SIZE	CAGE CODE	DRAWING NO.	REV
A	79500	83125BB	C

SCALE: NONE | SHEET 1 OF 3

DOCUMENT BUILT ON 05/21/2005 AT 23:45:33

1. **APPROVED SUPPLIERS AND MANUFACTURERS**

Manufacturer is defined as the fabricator of the material or product listed in Section 2, Ordering Information, below. The manufacturer may be a supplier if the product is procured from them. All other suppliers are distributors, and the words are synonymous. The manufacturer's CAGE code shown below is for reference only. Other CAGE codes for the manufacturer specified are also acceptable. Open Market indicates that any manufacturer of the material or product listed in Section 2, Ordering Information, is acceptable.

ER796 - NORTHROP GRUMMAN

Distributors

2. **ORDERING INFORMATION**

Brush Application of Chemical Conversion Coating on Aluminum Parts per MIL-C-5541, Class 1A.

Permanently mark all containers with ES Material Identification Number.

3. **MATERIAL DESCRIPTION AND CHARACTERISTICS**

This section contains typical manufacturer technical data sheet information and is for reference only, unless Section 2, Ordering Information, requires ordering to these specific characteristics.

Brush application of chemical conversion

coating on aluminum parts per MIL-C-5541, Class 1A.

Intended

to provide corrosion protection of unpainted aluminum

surfaces

and to improve adhesion of paint finish systems.

4. **SHELF LIFE INFORMATION (For Northrop Grumman internal use only)**

Not Applicable

Tested Properties

Not Applicable

Additional Information

Not Applicable

5. CERTIFICATE OF CONFORMANCE

Not Applicable

6. SCOPE OF CERTIFICATION

Not Applicable

7. CAUTION INFORMATION

(For internal use only)
Refer to Title 49 Code of Federal Regulations.

8. REVISION HISTORY

REVISION	DESCRIPTION	DATE	APPROVAL
B	REVISED	02/20/1989	
C	REVISED	08/16/1999	
C	REISSUED	05/20/2005	

SPECIFICATION NUMBER
PS83680PA

REV LTR	DATE	REVISION NOTICE NUMBER	PAGES AFFECTED	APPROVED
E	11-25-03	E65J2	All	Gordon Davy
D	9-10-03	E41U6	All	Gordon Davy
C	7-17-00	B53Z8	All	Gordon Davy
B	6-17-93	H395C	All	Gordon Davy
A	2-3-92	H315C	All	J.G. Davy
–	5-28-91	H248C	All	J. Gordon Davy

REVISIONS

ORIGINALLY PREPARED FOR CONTRACT NO. DTFA01-88-C-00037

ELECTRICAL DESIGN	ORIGINATOR J. G. Davy
MECHANICAL DESIGN	
QUALITY-REL. ASSUR.	
CONFIGURATION ENGRG.	

NORTHROP GRUMMAN CORPORATION
BALTIMORE, MARYLAND 21203

TITLE

PAINT AND PRIMER, APPLICATION OF

PAGE 1 OF 4 PAGES	SPECIFICATION TYPE	CAGE CODE	SPECIFICATION NUMBER
	PROCESS	97942	**PS83680PA**

1 SCOPE

This specification establishes the engineering requirements for the application of paints and primers. Any pre-treatment (such as use of a wash primer) and the topcoat will be specified on the drawing.

2 APPLICABLE DOCUMENTS

2.1 The following documents form a part of this specification to the extent specified herein:

Specifications (Government)

FED-STD-141	Paint, Varnish, Lacquer and Related Materials: Methods of Inspection, Sampling and Testing
A-A-883	Tape, Pressure Sensitive Adhesive, Masking
MIL-PRF-23377	Primer Coatings: Epoxy, Chemical and Solvent Resistant
MIL-F-18264	Finishes: Organic, Weapons System, Application And Control Of

3 REQUIREMENTS

3.1 Safety. Materials used in performing this process may be hazardous. Safety precautions shall always be applied. The environment, equipment, and tools necessary for the performance of any part of this specification shall be designed, fabricated, installed, and used per the applicable occupational safety and health standards. Additional information on potentially hazardous materials may be obtained from the manufacturers Material Safety Data Sheets (MSDS). When necessary, consult Industrial Hygiene and Safety.

3.2 Operations. The surface to be painted shall be free of foreign and loosely adhering material and smooth to the touch. It shall be primed using a strontium chromate-based epoxy primer per MIL-PRF-23377 Class C, and top coated using the material specified on the drawing to meet the thickness requirements of Table I (see 6.5). The gloss of a lusterless material may be reduced by dry sanding.

3.3 Product acceptance. Except for in-process thickness measurements, these requirements apply to the product at the completion of operations. These requirements do not apply to surfaces subject to normal (intended) abrasion from handling such as lifting eyes and skids. Because gloss and color may change with environmental exposure, once they are found acceptable, remeasurement is required only if the item is repainted. Acceptance tests shall be applied to a representative sample of similar items in the production lot, on not less than two different areas.

3.3.1 Thickness. The average thickness after cure shall be not less than sum of the minimum thicknesses (see Table I) for the coats that have been applied. The average thickness shall be based on not less than five measurements; each measurement shall be made not closer to surface features than the distances in Table II (see 6.1).

TABLE I
MINIMUM THICKNESS FOR COATINGS

Material Class	Not less than µm (µin)
Wash primer	10 (400)
Epoxy primer	15 (600)
Epoxy top coat	28 (1100)
Polyurethane	40 (1700)

TABLE II – MINIMUM DISTANCES
FOR THICKNESS MEASUREMENTS

Surface feature	Minimum distance, mm (inch)
Surface break	25 (1)
Protrusion	50 (2)
Two surface angles	50 (2)
Three surface corners	100 (4)

3.3.2 Gloss. Gloss on an assembly shall match to an inoffensive difference. For referee purposes the gloss of the finished assembly shall be measured, using the same method specified for the topcoat material, in not less than five locations. Limits on locations and values for gloss shall be per MIL-F-18264 (see 6.2).

3.3.3 Color difference. The color of a painted item shall match the standard color chip to an inoffensive difference. For referee purposes, color difference, measured per FED-STD-141 Method 6123, shall be not greater than the limits shown (see 6.3):

TABLE III – COLOR DIFFERENCE LIMITS

Paint type or color	Maximum color difference, units
Semigloss Urethane	3.5
Black, Clear	Test not performed
White	0.5 greater than for other colors of the same material
All other types and colors	1.5

3.3.4 Adhesion. When tested per 3.3.4.1, no paint shall adhere to the tape.

3.3.4.1 Test procedure. A strip of pressure-sensitive tape A-A-883, Type II not less than 50 millimeters (2 inches) long and 19 millimeters (3/4 inch) wide shall be firmly pressed in contact with a flat or cylindrical surface of the painted item so as not to overlap a hole or painted edge. The tape shall be removed, in one abrupt motion, by grasping the free end and pulling at a right angle to the surface.

3.3.5 Visual appearance. When viewed with the unaided eye the finish shall be smooth, continuous, and free from runs, sags, bubbles, cracking, flaking and checking. Additional limits are imposed in Table IV based on the type of item (see 6.4).

TABLE IV - LIMITS ON SURFACE IRREGULARITIES

Finished Item	Particles	Particle Clusters	Overspray	Orange Peel
Front Panel	No more than 3, no larger than 400 μm (0.016 inch) diameter in area of 0.1 m^2 (1 ft^2)	None	None	Not visible from 1 meter, with no specular reflection
Shelter/Antenna	OK	Not larger than 325 mm^2 (0.5 $inch^2$)	OK	OK
Internal, not hidden	Not visible from 1 m (3 ft), with no specular reflection →			
Internal, hidden in final installed configuration	No more than 15, no larger than 1 mm (0.04 in.) particles in a diameter in area of 0.1 m^2 (1 ft^2)	No more than 3 particles in a cluster	OK	OK

4 QUALITY ASSURANCE PROVISIONS

4.1 Responsibility for inspection. Inspection and monitoring shall be provided by quality/operations procedures to assure that this process is implemented per the requirements of section 3 as follows:

4.1.1 Monitor operations per 3.2.

4.1.2 Inspect for product acceptance per 3.3.

4.1.3 Inspect visual appearance per 3.3.6.

4.2 Testing is required by this specification. Monitoring shall be provided by quality/operations procedures to assure that proper testing is performed per the requirements of section 3.

4.2.1 Monitor test for thickness per 3.3.2.

4.2.2 Monitor test for gloss per 3.3.3.

4.2.3 Monitor test for color difference per 3.3.4.

4.2.4 Monitor test for adhesion per 3.3.5.

5 PREPARATION FOR DELIVERY

This section is not applicable to this specification.

6 NOTES

6.1 Thickness limits and uniformity. This specification applies to finishes not only on large planar areas but on small and non-uniform surfaces such as screw heads, wire mesh, and chassis shaped like a desk drawer. Even when the best available equipment and techniques are used, the thickness varies several fold near the surface features listed in Table II. The thickness is not to be measured near these features because the principal concern

for such areas is uniformity of appearance. The thickness minimums of Table I are taken from MIL-F-18264. No maximum has been specified for the thickness of a coating layer because this is controlled by the visual acceptance requirements (no cracking, flaking, or checking).

6.2 Gloss limits. The limits of MIL-F-18264 exceed the range for the material itself when applied to a test panel because the gloss is a function not only of the material but also of the smoothness of the substrate to which it is applied. The requirements for gloss and color difference (3.3.2 and 3.3.3) are worded to avoid having to perform measurements on every item or batch being painted yet provide a way of resolving a disagreement on whether a perceived difference is offensive.

6.3 Color difference limits. Color is compared to a standard color chip. The usual color chip is taken from FED-STD-595, Colors Used In Government Procurement.

The tolerances shown in 3.3.3 represent what is practical to attain for the various kinds and colors of paint, and meet or exceed customer expectations. The limits for applied paint are one-half unit greater than the limits imposed on the paint when it is received. Color difference is not measured for black because manufacturers have no way of adjusting this color; it is not measured for clear (i.e. colorless) because it would have no meaning.

6.4 Irregularity limits. The term "internal" means that the item is not exposed to the weather. The distinction between "hidden" and "not hidden" is based on the final installed configuration as shown in the drawings.

6.5 Design. The designer must specify the coatings (other than primer) to be applied. See Table V.

TABLE V - RECOMMENDED COATINGS

Identification	Description
M32240DL	Primer, Wash, Airdrying, Zinc Chromate
MIL-PRF-85285	Coating: Polyurethane, Aircraft And Support Equipment
MIL-C-46168 (for camouflage)	Coating, Aliphatic Polyurethane, Chemical Agent Resistant

Since polyurethane paint is better than epoxy paint for all applications, the latter has been made inactive for new design. This specification no longer permits the use of a water-based primer, as this material has been found to lose adhesion locally over time. Although this specification does allow either standard (Type I) or low-infrared reflective (Type II) solvent-based primer, Type I is preferred.

6.6 Changes from previous revision. Reference in 3.3.2 and 6.2 to MIL-F-18264 was restored and the wash primer recommendation in Table V was changed.

SPECIFICATION NUMBER
PS83869NB

REV LTR	DATE	REVISION NOTICE NUMBER	PAGES AFFECTED	APPROVED
L	10/14/04	REISSUE	All	Gordon Davy
L	8/25/04	F59A3	All	Gordon Davy
K	4/21/04	F13L9	All	Gordon Davy
J	4/7/04	F03E6	All	Gordon Davy

REVISIONS

ORIGINALLY PREPARED FOR CONTRACT NO.	Company Specification
ELECTRICAL DESIGN	ORIGINATOR J. G. Davy
MECHANICAL DESIGN	
QUALITY-REL. ASSUR.	
CONFIGURATION ENGRG.	

NORTHROP GRUMMAN CORPORATION
BALTIMORE, MARYLAND 21203

TITLE

MARKING

PAGE 1 OF 6 PAGES	SPECIFICATION TYPE	CAGE CODE	SPECIFICATION NUMBER
	PROCESS	97942	**PS83869NB**

1 SCOPE

1.1 Scope. This specification establishes the engineering requirements for applying product marking using methods that are described as different classes. Marking includes product identification (see 6.1) and legends (component identifiers and front panel information).

1.2 Classification. This specification has two procedures, based on whether a machine-readable marking is permitted (Procedure A) or required (Procedure B) – see 3.2. Where a procedure is not specified, Procedure A is intended. This specification also has five available classes, based on the application method – see 3.2.2.

2 APPLICABLE DOCUMENTS

2.1 The following documents form a part of this specification to the extent specified herein:

Specifications (Government)

MIL-STD-130	Identification Marking of US Military Property
A-A-883	Tape, Pressure Sensitive Adhesive, Masking
MIL-STD-1285	Marking of Electrical and Electronic Parts
L-T-100	Tape, Pressure Sensitive Adhesive, Polyester Film

Specifications (ES)

PDS76408GE	High Temperature Pressure Sensitive Adhesive Polyimide Label
M76408HH	Labels, Polyimide, Pressure-Sensitive
M76408HL	Polyester label
M76408HM	Polyester label

3 REQUIREMENTS

3.1 Safety. Materials used in performing this process may be hazardous. Safety precautions shall always be applied. The environment, equipment, and tools necessary for the performance of any part of this specification shall be designed, fabricated, installed, and used per the applicable occupational safety and health standards. Additional information on potentially hazardous materials may be obtained from the manufacturers Material Safety Data Sheets (MSDS). When necessary, consult Industrial Hygiene and Safety.

3.2 Operations. Marking shall comply with MIL-STD-130 and the additional requirements of this specification. Where a date code is required, it shall comply with MIL-STD-1285. Size shall be commensurate with the available area and the requirement for legibility. A specified size is nominal and need not be measured. In addition to the information specified by the drawing, marking may include the revision level for the item.

Procedure A. For Procedure A, unique identification marking (see 6.1) may include a machine-readable symbol that incorporates this same information.

Procedure B. For Procedure B, except where insufficient space is available, product identification marking shall include a machine-readable unique identification symbol per MIL-STD-130, positioned near the human-readable identification marking. The materials used for the symbol shall be per the specified marking class. Where a Class 4 polyimide label (see 3.2.2) is applied to an outdoor surface (i.e. exposed to weather), it shall be covered by a transparent pressure-sensitive polyester cover L-T-100 Type I, M76408HL, or M76408HM. Where the largest available space is too small for a machine-readable symbol the symbol shall instead be placed on the container.

3.2.1 Surface preparation. The surface shall be free of foreign and loosely adhering material. To promote adhesion the substrate may be treated per these options:

- Light abrasion, provided that there is no significant change in surface appearance.
- Covering, in the area to be marked, with a coating (see 3.2.4), or with an ink similar in color to the substrate.

3.2.2 Application method. Marking shall be applied by a method authorized for the specified class as shown below. Except for one repositioning during the application, a previously applied label shall not be reapplied.

Class	Method
1	Ink (see 6.2) by silkscreen or offset, or polyester label M76408HL or M76408HM. A label is not permitted on a front panel (or where prohibited by the drawing).
2	Ink by any mechanical method (see 6.1), or polyester label M76408HL or M76408HM. (A label is not permitted where prohibited by the drawing).
3	Same as Class 2 except including manual marking (inactive for new design).
4	Same as Class 2 except including marking applied by laser etching or Brady Series 2000 indelible ribbon and printer to a PDS76408GE polyimide label, or thermal marking to an M76408HH polyimide label. Laser marking shall not penetrate through the base material.
5	Marking by machine stamping of a metal, or per Class 1, 2, 3, or 4.
6	Same as Class 4 except including electrochemical etching, laser etching, and machine engraving as options (see 6.8).

3.2.3 Remarking. Where a design change makes existing marking obsolete (such as a change in a part number or revision letter), the obsolete marking shall be obliterated by one of the options below and the new information added per the specified class. The obliteration options are:

- Block out with ink
- Remove without substrate damage (not applicable to ink marking on printed wiring board laminate or metalization)
- Cover with a PDS76408GE or M76408HH label that carries the new information (applicable only for Class 4 or 5).

3.2.4 Coating. To promote adhesion (see 3.3.2), cured marking may be coated.

3.3 Product acceptance. The marking shall be per MIL-STD-130 and the following additional requirements.

3.3.1 Coating coverage. The coating, if applied, shall completely cover the marking and be contained entirely within the body outline of the marked item.

3.3.2 Adhesion. When ink marking is tested per 3.3.2.1, no marking or coating shall adhere to the tape. Tests shall be applied to a representative sample of similar items that are marked in a production lot with the same marking material (and coating material, if used), marking methods, and cure(s). If the item is marked in more than one place, then a representative sample of places on the item shall be tested.

3.3.2.1 Adhesion test. A strip of pressure-sensitive tape A-A-883, Type II not less that 50 millimeters (2 inches) long and 19 millimeters (3/4 inch) wide shall be firmly pressed onto the marking. The tape shall be removed, in one abrupt motion, by grasping the free end and pulling at a right angle to the surface.

4 QUALITY ASSURANCE PROVISIONS

4.1 Responsibility for inspection. Inspection and monitoring shall be provided by quality/operations procedures to assure that this process is implemented per the requirements of section 3 as follows:

4.1.1 Monitor operations per 3.2.

4.1.2 Inspect for product acceptance per 3.3.

4.2 Monitoring for materials used. Monitoring shall be provided by quality/operations procedures to assure that proper quality materials are used per the requirements of section 3 as follows:

4.2.1 Monitor ink and label material per 3.2.2.

4.3 Testing is required for this process. Monitoring shall be provided by quality/operations procedures to assure that proper testing is performed per the requirements of section 3.

4.3.1 Monitor test for adhesion per 3.3.2.

5 PREPARATION FOR DELIVERY

This section is not applicable to this specification.

6 NOTES

6.1 Definitions.

Legibility Marking is legible if it is complete enough to allow reading without ambiguity. It is easily legible if it can be read quickly (i.e. without the need for scrutiny). However, where the space available for the marking is limited (e.g. an electronic module) magnification may be necessary.
Mechanical method Any method of applying ink such as rubber stamp or silk screen that does not require manual marking, so that the characters are consistent in appearance.
Substrate The surface to which marking is applied.
Product identification Product identification is the combination of CAGE (or other organization identifier) code and drawing number that identifies an item.
Unique identification (UID) Unique identification per MIL-STD-130 is product identification that adds a serial number uniquely identifying an individual item.
Serialized item An item marked with a serial number as required by the product documentation.

6.2 Ink. The ink must meet the permanence requirement of MIL- STD-130 (i.e. solvent resistance and adhesion). A-A-56032 epoxy ink is recommended.

6.3 Work instructions. Because the permanence requirement ensures that marking and coating cure are adequate, it is unnecessary for this specification to cite particular surface preparation or cure conditions. Subcontractors are encouraged to contact the contractor for guidance. The factory work instructions should specify:

- surface preparation
- inks for various background colors
- marking means and cure conditions
- whether (and which) coating is to be applied and coating cure conditions
- a thinning solvent compatible with the ink or coating
- rules for marking information per MIL-STD-130

6.4 Design. This specification provides for marking by several methods. This includes a polyester label and machine stamping, which for virtually all situations are to be preferred over ink marking because it is faster, more permanent, less expensive, and less challenging to the environment. A polyester label is not intended on an item (such as a PROM) which is subject to heating during manufacturing. Because a polyester label outgases, it may be inappropriate for a space or electro-optical application. All classes allow for use of a label; where a label would not be acceptable, the drawing note must state: "Use of a label in place of ink marking is prohibited." Class 1 is normally used where appearance is important (e.g. a front panel), otherwise Class 2 or 4 should be specified. Class 3 is used where the substrate is not flat or smooth (e.g. an encapsulated transformer). Class 4 provides for the use of a polyimide label which can survive soldering temperatures. Class 5 gives the factory the greatest latitude, but should not be specified where there is a concern for appearance, potential difficulty of reading in the final installed location (e.g., a shelter), or potential impact on performance. In particular, machine stamping should not be used on thin metal or where there is a risk of structural failure due to stress concentration.

MIL-STD-130 requires specifying the application method(s) and the location and size of the area where the marking is to go; beyond these, the fewer things specified, the smaller the chance for engineering change requests, and the lower the cost. In particular, character and label sizes, ink, and color are better left unspecified. However, for Class 1, where appearance and uniformity are engineering requirements, character size (with limit dimensioning) and color should be specified (the contract may specify a color number for, say, red marking).

- If character and label sizes are not specified, the factory will choose a size that fits in the area shown and meets the requirement for legibility.

- If the ink is not specified, the factory will choose one appropriate for the application method and meets the requirement for permanence.
- If a color is not specified, the factory will choose a color that meets the requirement for contrast with the substrate.

When an item is marked with a date code, the date establishes the revision level of the drawing that applies to it. If an item already marked with a date code is to be modified to comply with a later revision, the drawing should specify the marking that is to be added to indicate the revision.

6.5 Labels. Label material supplied by W.H. Brady Co. to PDS76408GE has been qualified (see TM-828-MDD-193, August 2, 1993); M76408HH is similar. Polyester labels were qualified in a report issued August 11, 1998. To be qualified, a label and its marking should, by analysis or testing, be permanent:

- Meet MIL-STD-810 Method 507 Procedure I at up to 100% relative humidity at 71 degrees C.
- Resist JP-5 fuel, MIL-A-8243 anti-icing, de-icing fluids, MIL-L-7808 lubricating oil and coolants of the fluorocarbon, silicone, and silicate ester families.

6.6 Machine-readable UID symbol. This specification provides for applying a machine-readable unique identification symbol per MIL-STD-130 to serialized items. This symbol encodes the three data elements:

- Enterprise identifier number (CAGE)
- Original drawing number
- Serial number

A fourth data element, current part number, may also be encoded if different from the original part number. Note that a UID symbol complying with MIL-STD-130 cannot be created for an item that does not have a serial number, and hence is never required. Note also that not all marking methods are capable of including a machine-readable symbol.

By allowing rather than requiring a machine-readable symbol, Procedure A provides for dealing with product covered by an earlier version of the standard that does not require a symbol. The current version of MIL-STD-130 describes the type of product for which a machine-readable UID symbol is required and the requirements for type, syntax, data content, and readability of the symbol to be applied. Procedure B of this specification is intended for serialized board and microwave assemblies, LRU's (or equivalent) and higher levels of integration (e.g., transmitter, antenna, shelter) where the contract requires compliance with UID requirements.

MIL-STD-130 specifies the minimum cell size for the symbol; this combined with the number of characters to be encoded sets the minimum size of the symbol. Where there is insufficient room the standard provides for applying the marking to the container rather than the item itself. Where there is room for human-readable marking (i.e., text) but not for a machine-readable symbol (e.g., the board of certain board assemblies, particularly those designed before a symbol was required), this specification interprets that provision by allowing text alone on the item.

6.7 ESD symbol. Where the drawing specifies a symbol indicating that the marked item is sensitive to electrostatic discharge, the symbol to be used depends on the specification that is invoked or the symbol shown in the drawing. Drawings for hybrid microcircuits often show an open equilateral triangle, both to indicate ESD sensitivity and to designate pin 1. MIL-STD-130 provides for a different ESD sensitivity symbol which can be used if the drawing does not indicate one.

6.8 Class 6 marking. Class 6 includes as marking choices beyond those for Class 4 electrochemical etching (which removes metal to a typical depth of 0.0001-0.001 inch without marring the surrounding surface), laser etching, and machine engraving (which marks machineable materials with far less deformation and residual stress than machine stamping). These methods have not been evaluated for applying a machine-readable marking, but where this is required any of them may be used for human-readable marking, with the machine-readable marking applied by label.

6.9 Bag and tag. Where an item does not have enough space for identification marking, MIL-STD-130 allows the marking to be placed on the container instead. Because this specification invokes MIL-STD-130, no explicit permission to mark an item in this way is required.

6.10 Changes from previous revision. This revision adds a new Class 6 and notes 6.8 and 6.9. Class 3 has been made inactive for new design. The Scope is reworded. The document title is also changed.