NOTES:

1. NOT TO SCALE
2. ALL DIMENSIONS ARE IN INCHES UNLESS OTHERWISE INDICATED
3. MATERIAL USED: .190 ALUMINUM
4. DEBUR ALL EDGES
5. PAINT CAN BE PURCHASED FROM:
   1329 POTRERO AVENUE
   SO. EL MONTE, CA 91733
   (626) 444-9274 (213) 283-9335
   FAX: (626) 444-0382
   PAINT P/N: A-2000-30372
   FLAT BROWN F5595B

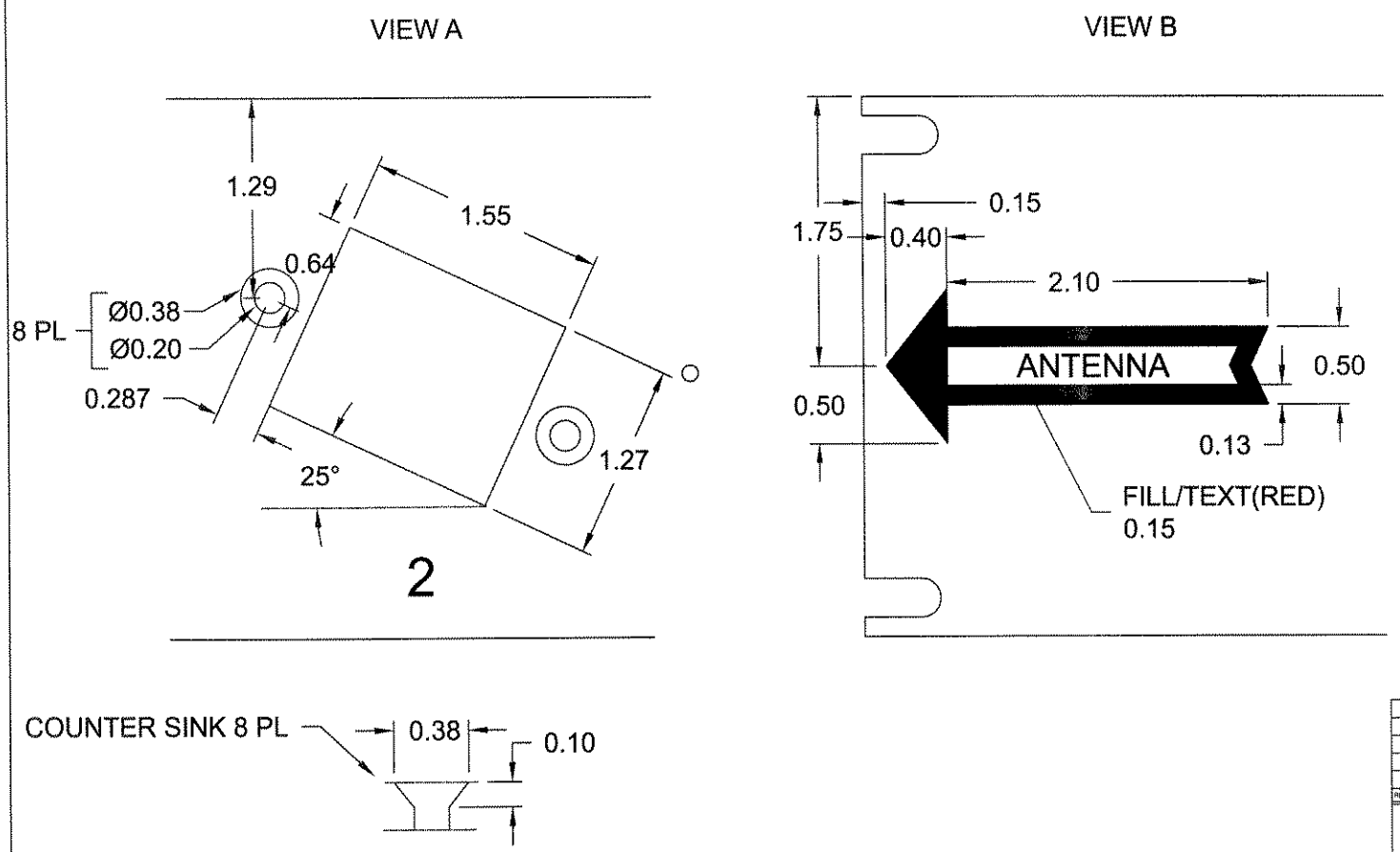

REV LTR	DATE	DESCRIPTION	CHECKED	APPROVED

DEPARTMENT OF TRANSPORTATION
FEDERAL AVIATION ADMINISTRATION
WESTERN / PACIFIC REGION-LOS ANGELES, CALIF.

ONTARIO CALIFORNIA

ADVANCED PROJECT ONTARIO
4 RF BODY PANEL

2 OF 2

REVIEWED BY	SUBMITTED BY	DATE	APPROVED BY	DATE
	LEAD PROJECT ENG., AHI-970 17		COMMUNICATION SYSTEM, COMMUNICATION, PLATEFORM, MGR., AHI-970	

DESIGNED BY	APO	DATE	DRAWING NO.
DRAWN BY	JE	09-07-05	APO-M-RF-12
CHECKED BY	JRR		

SHEET$CN OF$TN