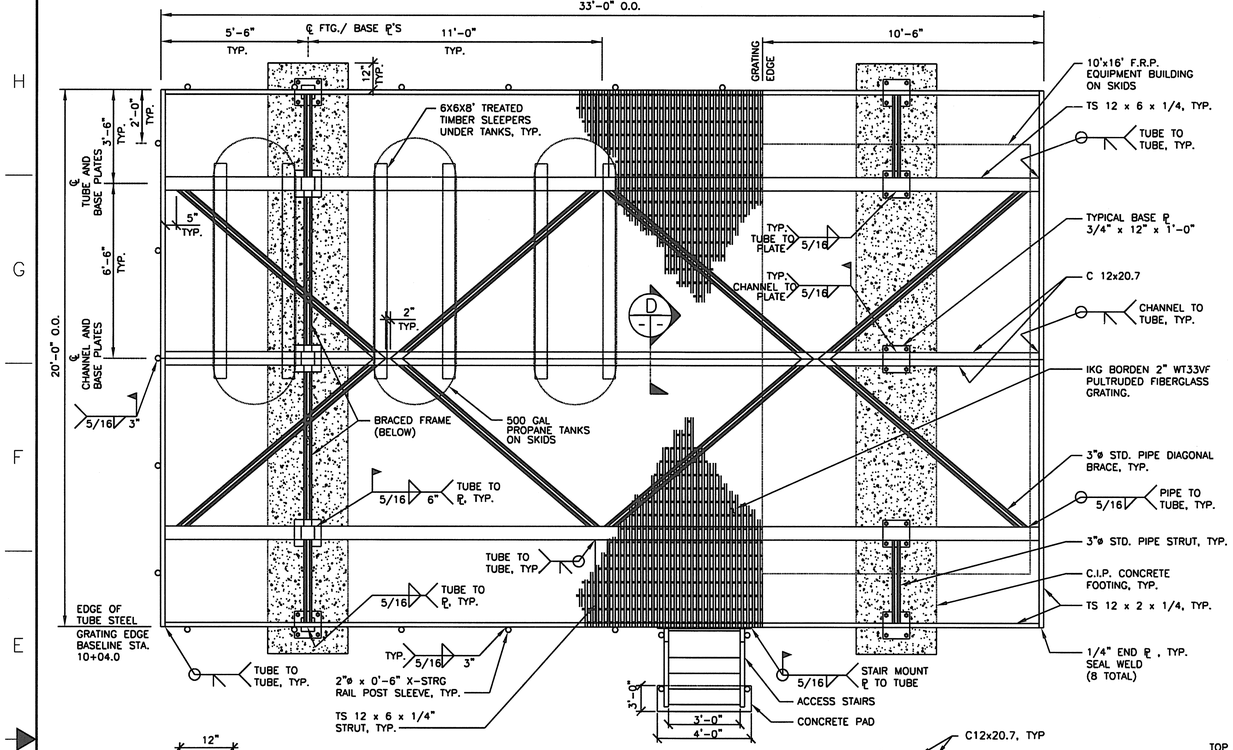

FRAMING / FOUNDATION PLAN
SCALE: N.T.S.

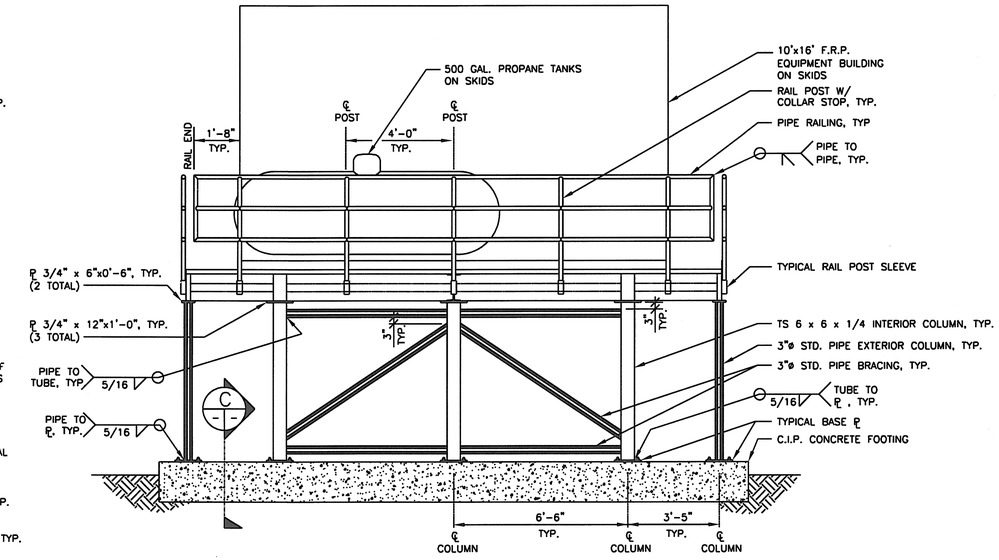

ELEVATION A
SCALE: N.T.S.

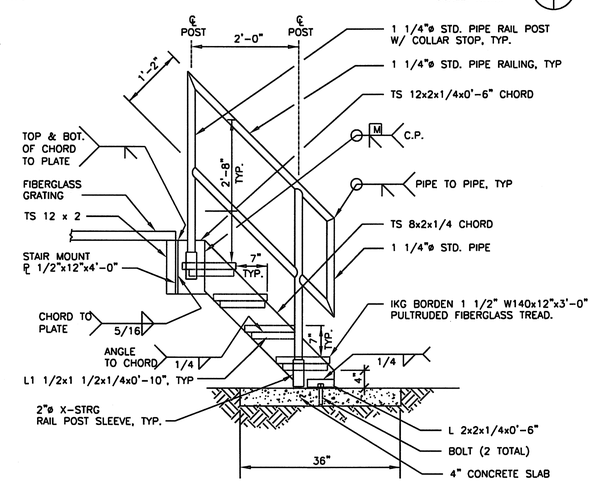

SECTION B
SCALE: N.T.S.

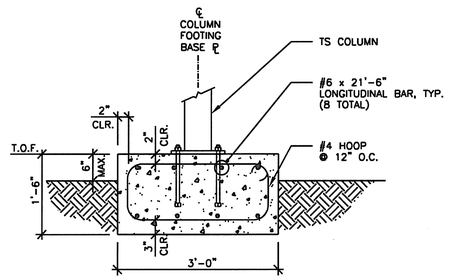

SECTION C
SCALE: N.T.S.

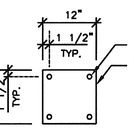

TYPICAL BASE PLATE
SCALE: N.T.S.

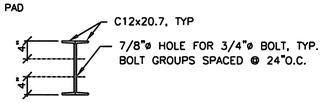

SECTION D
SCALE: N.T.S.

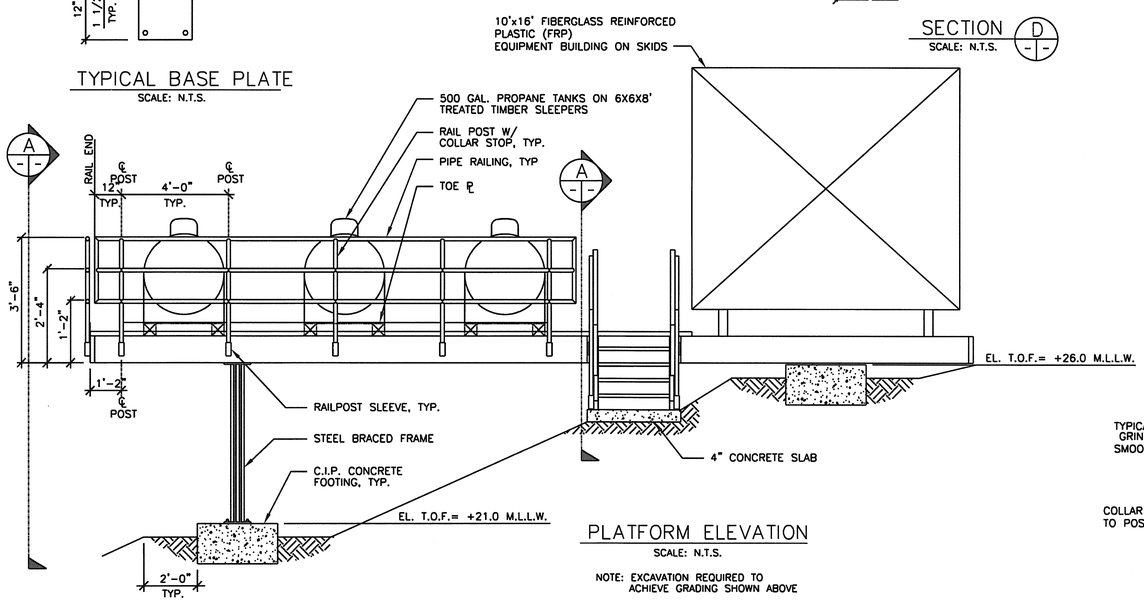

PLATFORM ELEVATION
SCALE: N.T.S.

NOTE: EXCAVATION REQUIRED TO ACHIEVE GRADING SHOWN ABOVE

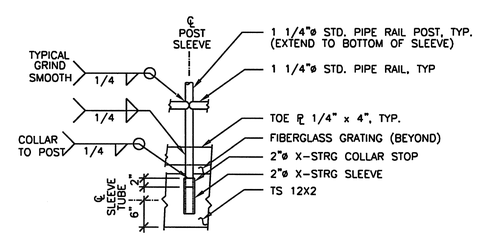

TYPICAL RAIL POST
SCALE: N.T.S.

FOR REFERENCE ONLY

FOR OFFICIAL USE ONLY
PUBLIC AVAILABILITY TO BE DETERMINED UNDER 5 USC 552

REV	APPROVED DATE	DESCRIPTION	JCN	REDLINE DATE	APVD
1	02/23/1998	AS-BUILT - ESTABLISH LDIN LIGHTS	30143	07/17/1995	MG

DEPARTMENT OF TRANSPORTATION
FEDERAL AVIATION ADMINISTRATION
ANCHORAGE IMPLEMENTATION CENTER — ANCHORAGE, AK

LDIN
RWY 08 - BATTLESHIP ISLAND
EQUIP BLDG /TANK PLATFORMS
PLAN, ELEV. & SECTION

JUNEAU — AK

REVIEWED BY	SUBMITTED BY	APPROVED BY
	MARK GORMAN	JOE KUNZMANN, MANAGER
	GENERAL ENGINEER, ANI-790	INSTL AND CONST. SUPPORT

DESIGNED — ISSUED BY: NAS IMPLEMENTATION ANI-700 — DATE 07/17/1995 — JCN 30143
DRAWN — DRAWING NO ALD-JNU-322.002 — REV 1
CHECKED

AS-BUILT

ALD-JNU-322.002-L.dgn 11/8/2011 4:03:38 PM lori devona

DWG. 50.0-L