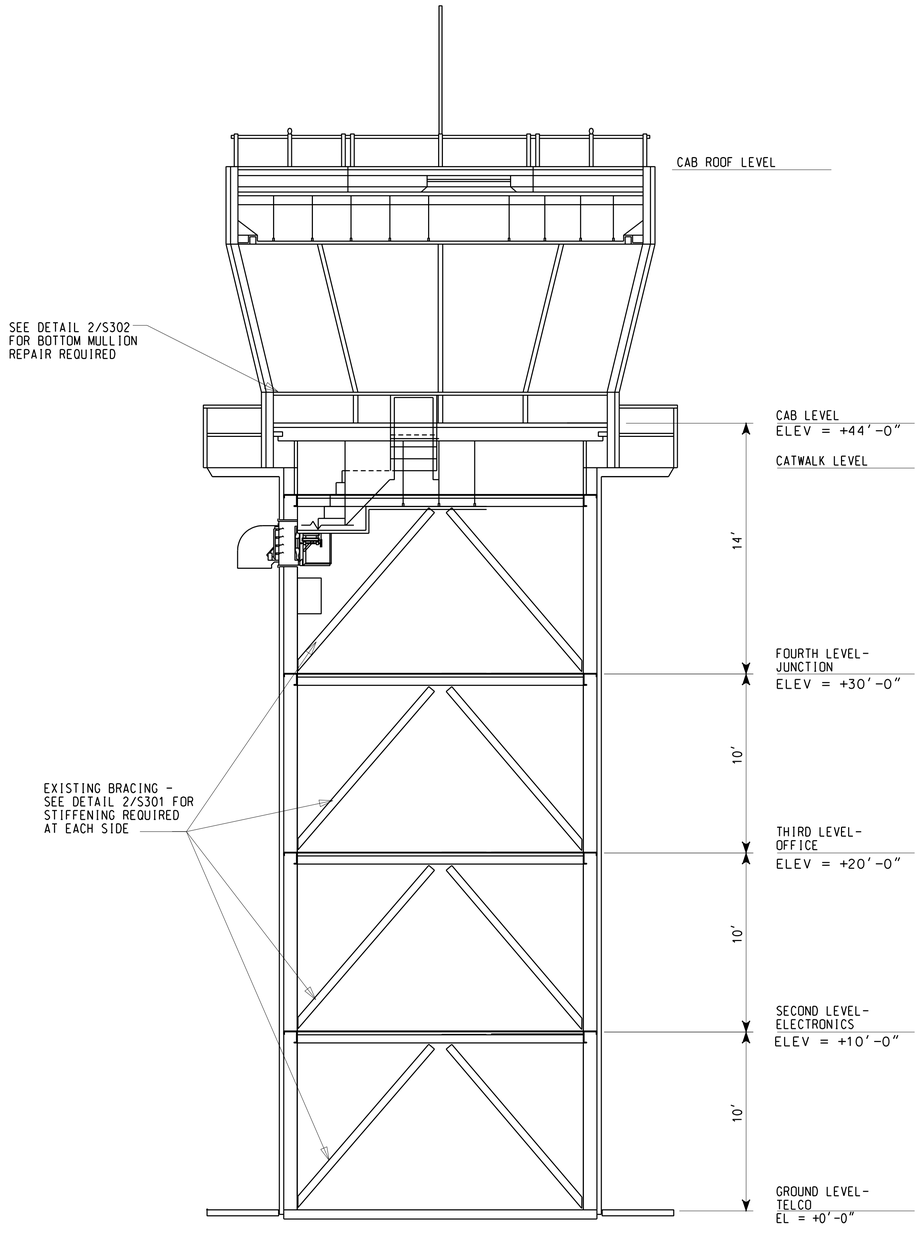

A S300 SECTION
SCALE: 1/4" = 1' - 0"

4' 0 4' 8'
1/4" = 1'-0"

SCALES SHOWN FOR 22" X 34" SHEET. ADJUST SCALES FOR OTHER SIZES.

PAGE OF 63

REV	APPROVED DATE	DESCRIPTION	JCN	REDLINE DATE	APVD

GEORGIA REGISTERED No. 18048 PROFESSIONAL ENGINEER ROBERT A. BASS

HARTRAMPF
7000 CENTRAL PARKWAY, SUITE 1475
ATLANTA, GEORGIA 30328
HEI JOB NUMBER: 09033.00

DEPARTMENT OF TRANSPORTATION
FEDERAL AVIATION ADMINISTRATION

ATHENS AIRPORT TRAFFIC CONTROL TOWER
ATCT - MAJOR SUSTAIN AND SEISMIC MITIGATION
STRUCTURAL
SECTION

ATHENS (ATHENS MUNICIPAL AIRPORT) GA

REVIEWED BY
SUBMITTED BY VIRGIL HOOPER, PE.
APPROVED BY MARK BEEKMAN

DESIGNED SNG
DRAWN SNG
CHECKED RAB
ISSUED BY ATLANTA TERMINAL ENGINEERING CENTER
DATE 03/31/2010 JCN 804669
DRAWING NO AHN-D-ATCT-S300 REV

$FILE$ $DATE$ $TIME$ $NAME$

...\D Struc\AHN-D-ATCT-S300.dgn 3/31/2010 1:02:39 PM