ATTACHMENT G

GFM Antenna Mast

5 pages

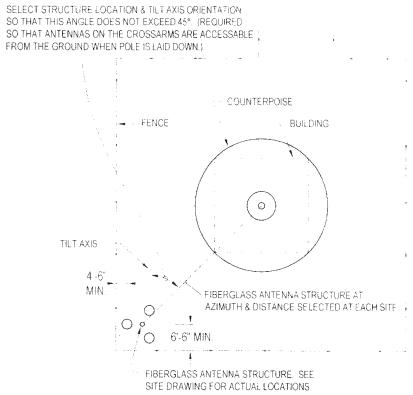

TYPICAL SITE PLAN

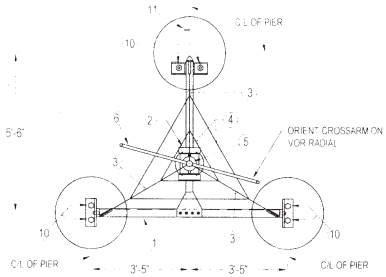

SECTION A-A

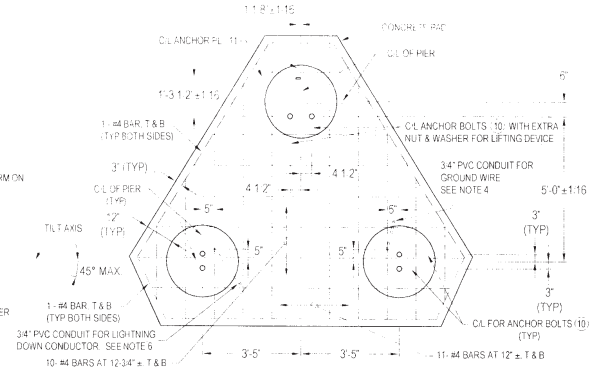

SECTION B-B

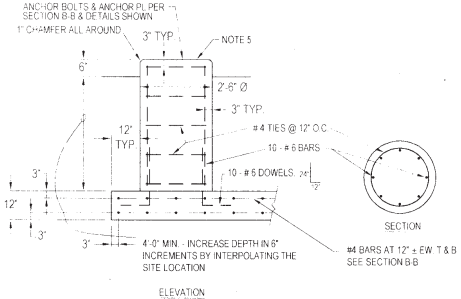

DETAIL - CONCRETE PIERS

BASIC PARTS LIST (GFM)	
ITEM #	DESCRIPTION
1	MOUNTING FRAME ASSEMBLY
2	STAND PLATE ASSEMBLY
3	STABILIZER ROD ASSEMBLIES
4	HORIZONTAL STABILIZER ASSEMBLIES
5	FIBERGLASS TUBE
6	ALUMINUM CROSSBAR
7	ALUMINUM ANTENNA JOINT
8	OPTIONAL TOPS
9	ALUMINUM CROSSBAR/SWIVEL PLATE ASSEMBLY
10	ANCHOR BOLTS FOR MOUNTING FRAME
11	ANCHOR PLATE FOT TILT DEVICE

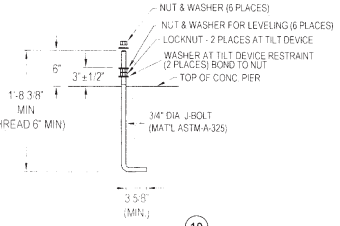

DETAIL-ANCHOR BOLT (10)
(6 REQ'D FOR EACH STRUCTURE)

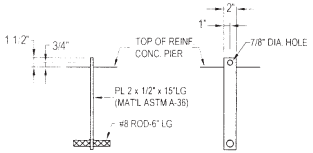

ANCHOR PLATE (11)
(1 REQ'D FOR EACH STRUCTURE)

NOTES:

1. SEE SPECIFIC SITE PLAN FOR TYPE OF STRUCTURE, LOCATION & ORIENTATION AT EACH LOACTION.
2. CONCRETE: 4000 PSI AT 28 DAYS. 6% AIR ENTRAINMENT. 4" MAX. SLUMP WITH 3/4" MAX. AGGREGATE.
3. REBAR: ASTM 615, GRADE 40.
4. LOCATE CONDUIT IN PIER ADJACENT TO THE CABLE JUNCTION BOX.
5. TOP OF PIER ELEVATION TO BE 6" MIN. TO 12" MAX. BELOW THE BUILDING FLOOR.
6. LOCATE CONDUIT IN PIER OPPOSITE THE CABLE JUNCTION BOX.

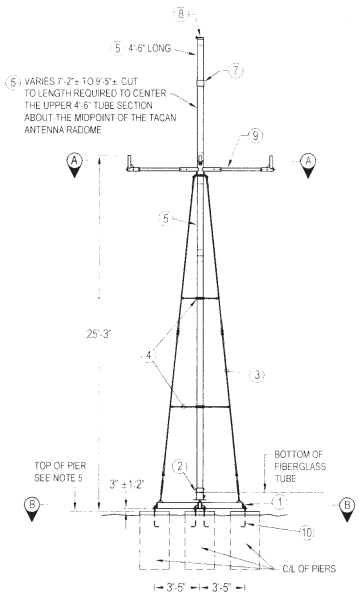

TACAN MONITOR STRUCTURE

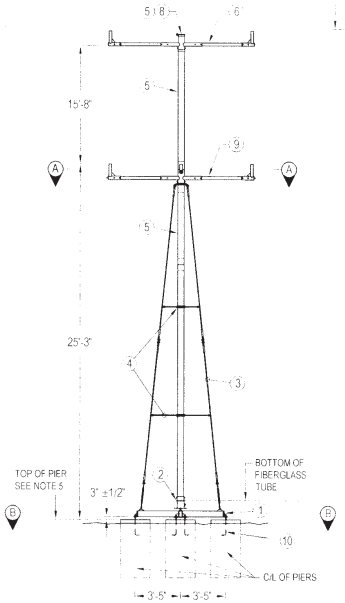

RUAG STRUCTURE

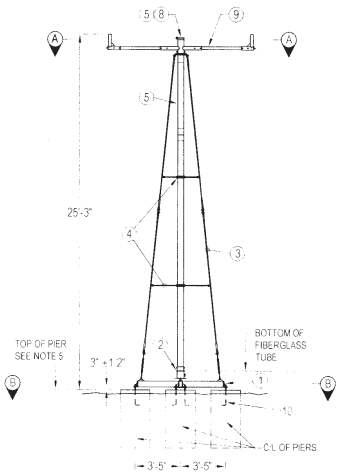

BUEC/SFO STRUCTURE

JAQUITH INDUSTRIES INC.
PO BOX 780
600 E. BRIGHTON AVE.
SYRACUSE, NEW YORK 13205
www.jaquith.com 315-478-5700

REV. LTR.	DATE	DESCRIPTION	CHECKED	APPROVED
A	7/3/03	REDRAWN IN AUTOCAD FORMAT - JS		

DEPARTMENT OF TRANSPORTATION
FEDERAL AVIATION ADMINISTRATION
CENTRAL REGION - KANSAS CITY, MISSOURI

GENERAL LAYOUT & FOUNDATION DETAILS JAQUITH NL-40 FIBERGLASS ANTENNA STRUCTURES

REVIEWED BY | SUBMITTED BY | APPROVED BY
TECHNICAL OFFICER

DESIGNED BY
DRAWN BY
CHECKED BY

ISSUED BY: AIRWAY FACILITIES DIVISION ENGINEERING BRANCH
DATE: 8/10/88
DRAWING NO. CD-D-7778
REV. LTR. A

CAUTION 1. BONDING INVOLVES USE OF CHEMICALS. FOLLOW MANUFACTURERS PRECAUTIONS.

CAUTION 2. BOND STRENGTH IS SENSITIVE TO SURFACE PREPARATION TEMPERATURE AND CURE TIME. INCREASED TEMP. CAN REDUCE CURE TIME. FOLLOW MANUFACTURERS RECOMMENDATIONS.

INFO CHEMLOK 304 – MANUFACTURED BY: HUGHSON CHEMICALS, LORD CORP, ERIE, PENN.

CAUTION 3. STABILIZER RODS AND 6 IN. DIA. TUBES: FRAGILE – HANDLE WITH CARE.

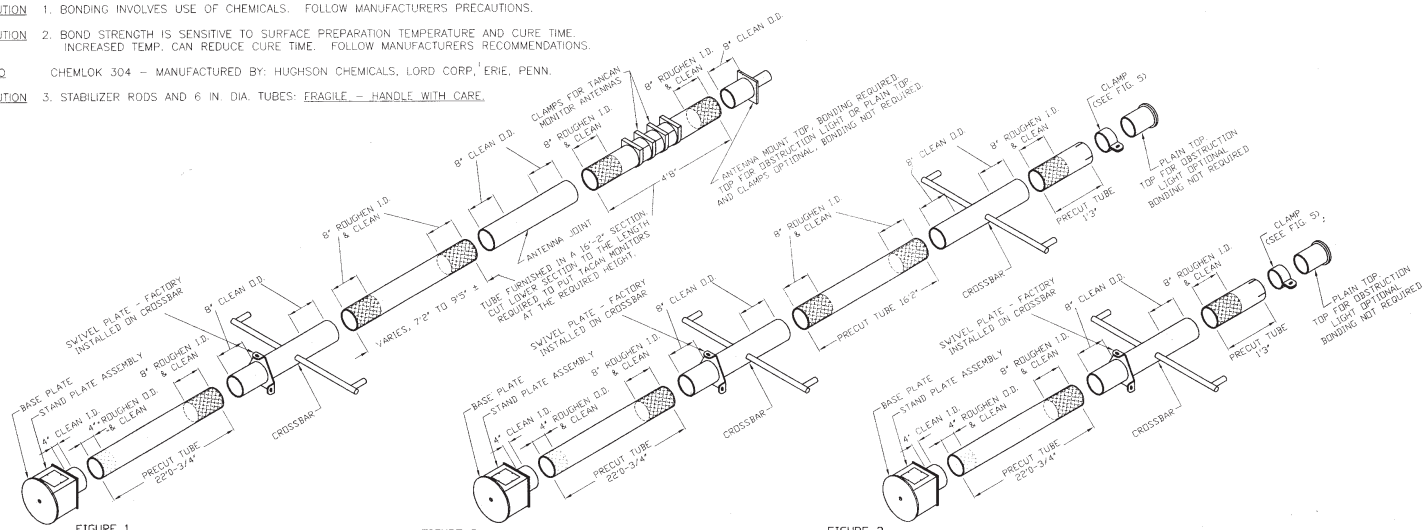

FIGURE 1
TACAN MONITOR STRUCTURE

FIGURE 2
RCAG STRUCTURE

FIGURE 3
BUEC/SFO STRUCTURE

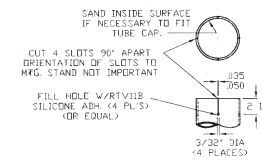

FIGURE 5
FIELD CUT SLOTS & HOLES
(FOR INSTALLING TUBE CLAMP)

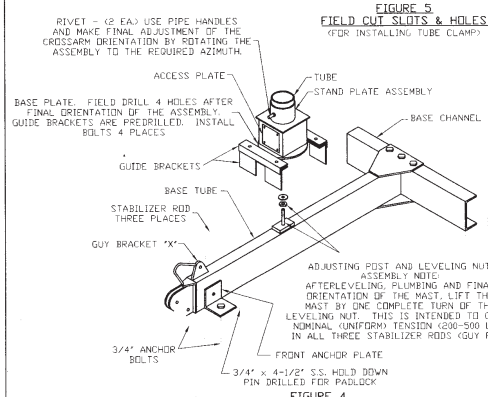

FIGURE 4
MOUNTING FRAME ASSEMBLY

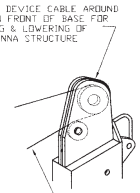

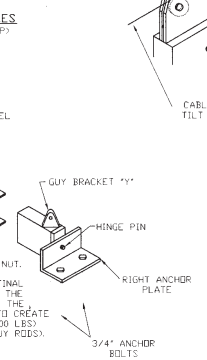

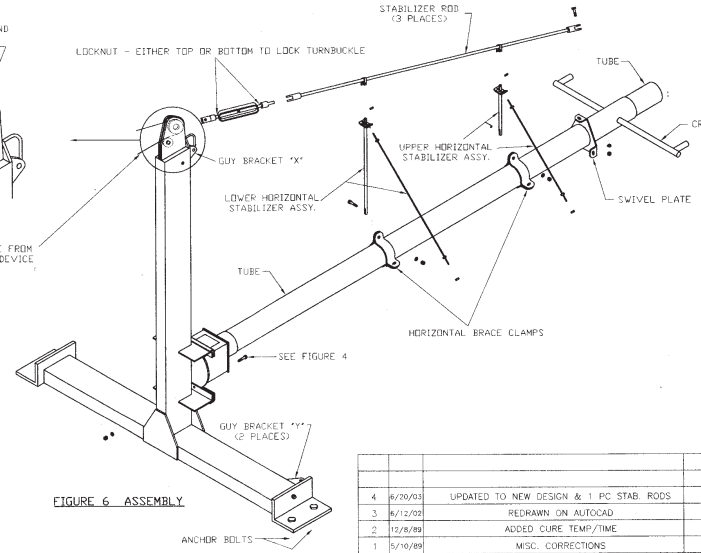

FIGURE 6 ASSEMBLY

ASSEMBLY INSTRUCTIONS

1. THE RCAG & BUEC/SFO STRUCTURES ARE FURNISHED WITH THE FIBERGLASS TUBE SECTIONS PRECUT TO THE REQUIRED LENGTHS. THE TACAN MONITOR STRUCTURE IS FURNISHED WITH THE LOWER FIBERGLASS TUBE SECTION PRECUT. THE CENTER & UPPER SECTONS ARE FURNISHED IN A SINGLE SECTION. CUT THE UPPER SECTION TO THE 4'6" LENGTH AND THE CENTER SECTION TO THE LENGTH REQUIRED (VARIES FROM APPROX 7'2" TO 9'5") TO CENTER THE TACAN MONITOR ANTENNAS ABOUT THE MIDPOINT OF THE TACAN ANTENNA RADOME.

2. CUTTING & BONDING INSTRUCTIONS: SEE FIGS. 1,2 & 3. CUT THE TACAN MONITOR TUBES USING A TABLE SAW WITH DIAMOND OR CARBIDE ABRASIVE BLADE. ALL SAW CUTS SHALL BE AT RT. ANGLE TO TUBE AXIS. DEBURR SAW CUT EDGES WITH A FILE. FOR BONDING, ROUGHEN SURFACES TO BE BONDED, AS SHOWN IN FIGS. 1,2 & 3 USING EMERY CLOTH. CLEAN MATING SURFACES THOROUGHLY WITH A SOLVENT (M.E.K., TOLUENE, OR ACETONE). MIX EQUAL PARTS OF CHEMLOC 304-1 EPOXY RESIN & 304-2 HARDENER. STIR THOROUGHLY BUT AVOID AIR INCLUSION. FOR EACH JOINT TO BE BONDED, SPREAD A LIGHT COAT OF MIXED ADHESIVE ON BOTH THE SURFACES TO BE BONDED. ASSEMBLE THE CROSSBARS AND ANTENNA JOINT TO THE TUBES FIRST. THE SWIVEL PLATE IS FACTORY INSTALLED ON THE CROSSBAR. SLOWLY SLIDE THE TUBES ONTO THE CROSSBARS AND ANTENNA JOINT WHILE ROTATING TO EXCLUDE AIR. CURE 48 HOURS AT ROOM TEMPERATURE ABOVE 65°. MAKE SURE THE UPPER RCAG CROSSBAR IS DIRECTLY ABOVE THE LOWER CROSSBAR. INSTALL THE TACAN ANTENNA JOINT WITH ITS CABLE CONNECTORS ON THE SAME ORIENTATIONS AS THE CROSSBAR. NEXT, BOND THE STAND PLATE ASSEMBLY TO THE LOWER TUBE USING THE SAME PROCEDURE EXCEPT THE TUBE SLIDES INTO THE STAND PLATE ASSEMBLY. ORIENT THE STAND PLATE ASSEMBLY ON THE TUBE SO THAT WHEN ITS ACCESS PLATE FACES THE FRONT OF THE INSTALLED MOUNTING FRAME ASSEMBLY (FIG. 4) THE CROSSBAR IS ON THE APPROXIMATE AZIMUTH REQUIRED BY THE SITE PLAN. MINOR ADJUSTMENTS IN THE CROSSBAR ORIENTATION CAN BE MADE AFTER THE STRUCTURES ARE ERECTED BY ROTATING THE ENTIRE STRUCTURE AS INDICATED ON FIG. 4. THE FINAL ORIENTATION OF THE CROSSBAR SHALL BE ON THE AZIMUTH REQUIRED BY THE SITE PLAN.

3. IMPORTANT ~ ALL STRUCTURES ARE TO BE ASSEMBLED IN HORIZONTAL POSTION (SEE FIG. 6.) ELECTRICAL WORK NOT SHOWN HERE. USE MOUNTING FRAME ASSEMBLY SHOWN IN FIG. 4. INSERT HINGE PINS WHICH ARE ATTACHED TO BASE CHANNEL, INTO LEFT AND RIGHT ANCHOR PLATES. PLACE FRONT ANCHOR PLATE AND LEFT AND RIGHT ANCHOR PLATES OVER 3/4" ANCHOR BOLTS. CONNECT BASE TUBE TO BASE CHANNEL. MAKE SURE MTG. FRAME ASSEMBLY SWINGS FREELY ON HINGE PINS. SHIM TO LEVEL AND TIGHTEN ANCHOR BOLTS WITH 3/4" NUTS. RAISE MTG. FRAME ARM TO ABSOLUTE VERITCAL. CHECK WITH LEVEL. ATTACH STABILIZER RODS TO THE SWIVEL PLATE ASSEMBLY (FIG. 6). SLIDE THE LOOSE GUIDE BRACKETS OVER THE BASE PLATE ON THE STAND PLATE ASSEMBLY (FIG. 4) AND ALIGN NOTCHES WITH THE BASE TUBE. ROTATE THE STAND PLATE ASSEMBLY SO THE ACCESS PLATE FACES THE FRONT OF THE MOUNTING FRAME. SLIDE THE STAND PLATE ASSEMBLY ONTO THE MOUNTING FRAME WITH THE GUIDE BRACKETS FIT OVER THE BASE TUBE AND THE ADJUSTING POST FIT INTO THE HOLE IN THE BASE PLATE. ADJUST NUT FOR PROPER HEIGHT. SUPPORT UPPER END OF THE MAST SO IT IS APPROXIMATELY PARALLEL WITH GROUND. FASTEN TURNBUCKLES (ATTACHED TO STABILIZER RODS) TO GUY BRACKETS "X" AND "Y". TIGHTEN TURNBUCKLE AT GUY BRACKET "X" UNTIL MAST IS EXACTLY PERPENDICULAR TO MTG. FRAME. TIGHTEN OVER TWO TURNBUCKLES AT GUY BRACKETS "Y". ATTACH HORIZONTAL STABILIZER ASSEMBLY.

4. RAISE THE STRUCTURE TO A VERTICAL POSITION USING THE TILT DEVICE. LEVEL AND PLUMB THE STRUCTURE BASE AND MAST. WITH THE USE OF A TRANSIT, MAKE THE FINAL ORIENTATION OF THE CROSSARMS. DRILL THE BASE PLATE AND INSTALL BOLTS TO LOCK IN PLACE (SEE FIG. 4). IN THE LEVEL AND PLUMB POSITION, ALL THREE STABILIZER RODS (GUY RODS) SHOULD BE SNUG TIGHT. THEN USING ONE TURN OF LEVELING NUT, LIFT NL-40 MAST (SEE ASSEMBLY NOTE FIG. 4).

NOTES

1. EACH STRUCTURE SHALL BE CUT ACCURATELY, AND BONDED AND CURED PROPERLY IN A SUITABLE WORK ROOM.
2. BASE OF EACH STRUCTURE SHALL BE GROUNDED ELECTRICALLY IN FIELD.
3. EACH STRUCTURE SHALL BE MAINTAINED PER THE APPLICABLE PORTIONS OF THE MANUFACTURERS PREVIOUS INSTRUCTION BOOKS FOR L.I.R. STRUCTURES (i.e. T.I. 6850.57 OR T.I. 6850.77)
4. ALL BONDING SHALL BE CURED AT 65°F MIN FOR A MINIMUM OF 24 HOURS.

JAQUITH INDUSTRIES INC.
PO BOX 780
600 E. BRIGHTON AVE.
SYRACUSE, NEW YORK 13205
www.jaquith.com 315-478-5700

REV	DATE	DESCRIPTION	JOB NO.	APPROVED
4	6/20/03	UPDATED TO NEW DESIGN & 1 PC STAB. RODS		R.P.
3	6/12/02	REDRAWN ON AUTOCAD		RP
2	12/8/89	ADDED CURE TEMP/TIME		NL
1	5/10/89	MISC. CORRECTIONS		NL

DEPARTMENT OF TRANSPORTATION
FEDERAL AVIATION ADMINISTRATION
CENTRAL REGION – KANSAS CITY, MISSOURI

ASSEMBLY INSTRUCTIONS FOR JAQUITH NL-40 FIBERGLASS ANTENNA STRUCTURES

REVIEWED BY:	DESIGNED BY: NL DRAWN BY: IDECO CHECKED BY: NL	ISSUED BY AIRWAY FACILITIES DIVISION ENGINEERING BRANCH	SUBMITTED BY: APPROVED BY: DATE: 8/10/88
SECTOR:	ALPHA TY & CL / ATS LOC / AF/REM / AF/CON / R/CCC		REVISION NO. 4 DRAWING NO. CE-D-7778-1

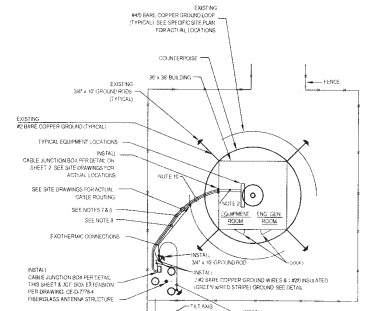

TYPICAL SITE PLAN

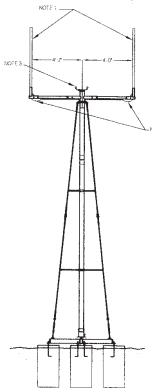

BUEC/SFO STRUCTURE

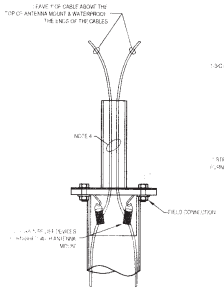

DETAIL-ANTENNA MOUNT TOP
FOR TACAN MONITOR STRUCTURE

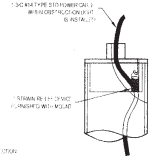

DETAIL-OBSTRUCTION LIGHT TOP

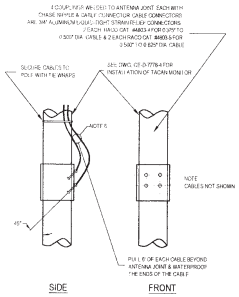

DETAIL-ANTENNA JOINT FOR
TACAN MONITOR

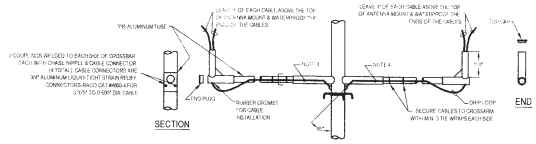

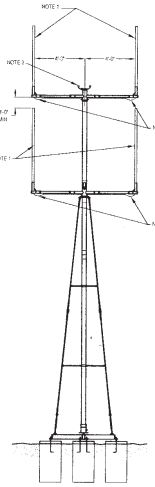

RCAG STRUCTURE

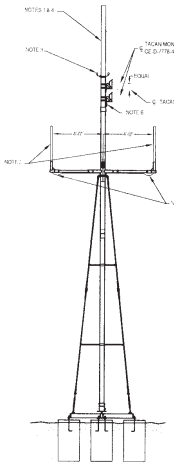

TACAN MONITOR STRUCTURE

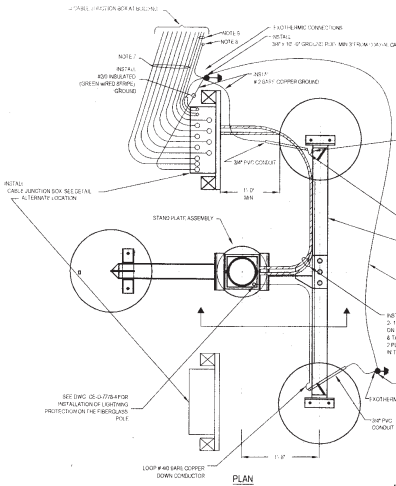

PLAN

DETAIL-CABLE INSTALLATION
AT BASE OF ANTENNA STRUCTURE

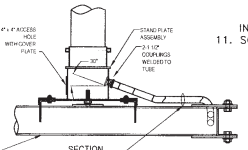

SECTION

NOTES:

1.: STANDARD, STACKED OR HIGH GAIN ANTENNAS PER SITE REQUIREMENTS, ANTENNA INSTALLATIONS BY OTHERS.

2. STANDARD ANTENNAS PER SITE REQUIREMENTS. ANTENNA INSTALLATION BY OTHERS.

FURNISH & INSTALL

3. OBSTRUCTION LIGHT & 3/C #14 TYPE STO POWER CABLE WHEN SPECIFIED IN SITE REQUIREMENTS.

INSTALL

4. 2- RG214 COAXIAL CABLES TO EACH ANTENNA LOCATION REGARDLESS OF THE ANTENNA TYPE REQUIRED.

INSTALL

5. 1- RG214 COAXIAL CABLE FOR EACH ANTENNA LOCATION EXCEPT WHERE 2- RG214 CABLES ARE SPECIFIED IN THE SITE REQUIREMENTS.

INSTALL

6. 1- RG214 COAXIAL CABLE & FURNISH & INSTALL 1-3/C #14 TYPE STO POWER CABLE TO EACH TACAN MONITOR (4 CABLES).

INSTALL

7. RG333 COAXIAL CABLES IN 36" DEEP TRENCH FROM CABLE JUNCTION BOX AT ANTENNA STRUCTURE TO CABLE JUNCTION BOX AT BUILDING. NUMBER OF CABLES PER SITE REQUIREMENTS.

INSTALL

8. #4/0 BARE COPPER GROUND, 24" DEEP, IN SAME TRENCH WITH COAXIAL CABLES FROM GROUND ROD AT ANTENNA STRUCTURE TO EXISTING # 4/0 GROUND LOOP. LOCATE IN CENTER OF TRENCH.

INSTALL

9. RIGID STEEL CONDUIT WITH 3/C #14 TYPE STO POWER CABLES IN 36" DEEP TRENCH WITH COAXIAL CABLES. nUMBER OF CABLES PER SITE REQUIREMENTS. USE 3/4" FOR 1 CABLE, 1 1/4" FOR 2 CABLES & 1 1/2" FOR 3 CABLES. OMIT CONDUIT WHEN SITE REQUIREMENTS DO NOT SPECIFY POWER CABLE.

INSTALL

10. #2 BARE COPPER GROUND & #2/0 INSULATED (GREEN WITH RED STRIPE) GROUND, 24" DEEP, IN SAME TRENCH WITH COAXIAL CABLES FROM EXISTING #4/0 GROUND LOOP TO CABLE JUNCTION BOX AT BUILDING.

INSTALL

11. SQUARE DUCT & CONDUIT, FROM JUNCTION BOX TO EQUIPMENT LOCATION, WITH RG214 COAXIAL CABLES & 3/C #14 TYPE STO POWER CABLES PER SITE REQUIREMENTS. sEE DETAILS ON SHEET 2.

JAQUITH INDUSTRIES INC
PO BOX 780
600 E. BRIGHTON AVE.
SYRACUSE, NEW YORK 13205
www.jaquith.com 315-478-5700

REV. LTR.	DATE	DESCRIPTION	CHECKED	APPROVED
B	7/12/05	REDRAWN IN AUTOCAD FORMAT - DA		
A	5/10/89	MISC. CORRECTIONS		

DEPARTMENT OF TRANSPORTATION
FEDERAL AVIATION ADMINISTRATION
CENTRAL REGION - KANSAS CITY, MISSOURI

CABLE INSTALLATION DETAILS JAQUITH NL-40 FIBERGLASS ANTENNA STRUCTURES

REVIEWED BY	SUBMITTED BY	APPROVED BY
		TECHNICAL OFFICER

DESIGNED BY / DRAWN BY / CHECKED BY — ISSUED BY: AIRWAY FACILITIES DIVISION ENGINEERING BRANCH

DATE- 8/10/88

DRAWING NO. CE-D-7778-2 REV. LTR. C

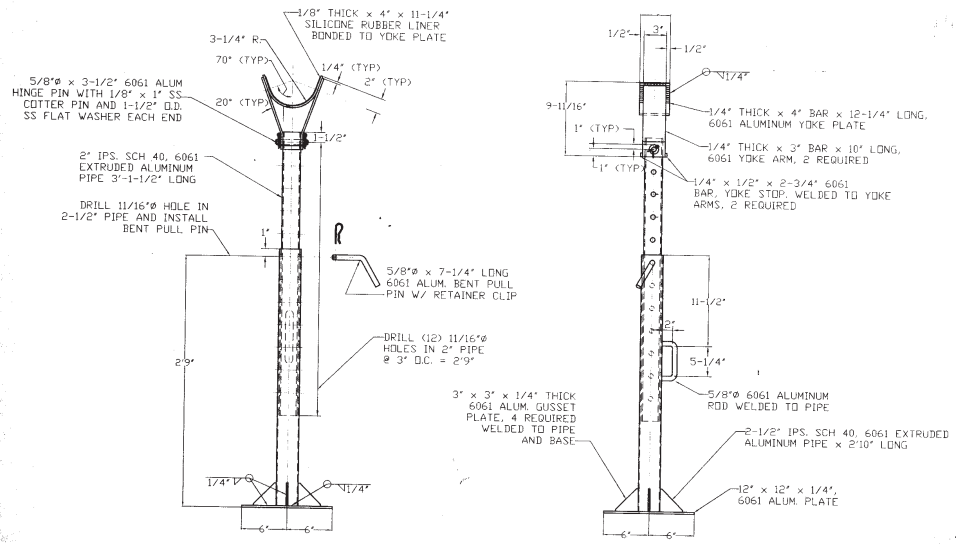

ADJUSTABLE VERTICAL STAND

(TYPICAL ALL STRUCTURES)
SEE NOTE 3

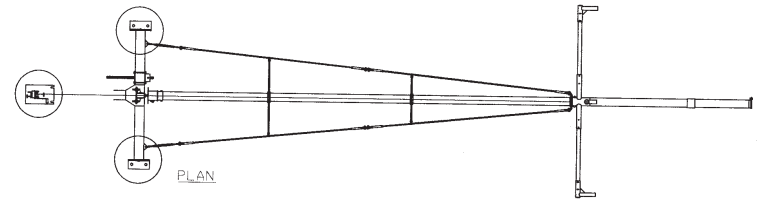

PLAN

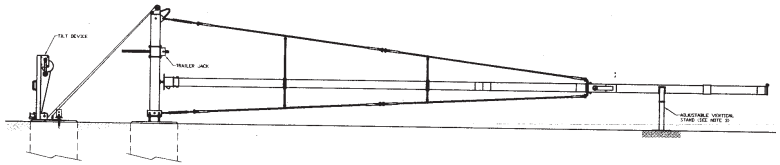

ELEVATION

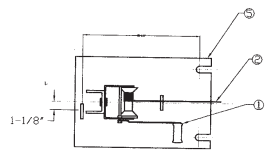

PLAN

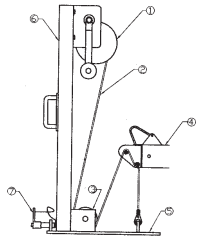

① WINCH
② CABLE
③ PULLEY
④ SHEAVE BLOCK
⑤ RECTANGULAR PLATE (ALUM. 12" x 18" x 3/8" APPROX.)
⑥ CHANNEL (2" x 2" x 1/4" x 36" LG. ALUM.)
⑦ QUICK RELEASE PIN

ELEVATION
TILT DEVICE

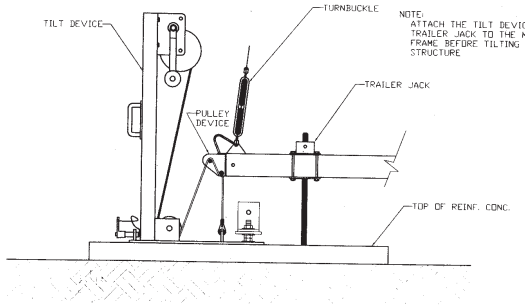

NOTE:
ATTACH THE TILT DEVICE AND THE TRAILER JACK TO THE MOUNTING FRAME BEFORE TILTING THE STRUCTURE.

ATTACHING TILT DEVICE TO MOUNTING FRAME ASSEMBLY
(TYPICAL ALL STRUCTURES)
SEE NOTES 1 & 2

NOTES:

1. TILT DEVICE AND TRAILER JACK FURNISHED BY THE STRUCTURE MANUFACTURER.
2. ONE TRAILER JACK REQUIRED FOR EACH POLE. ONE TILT DEVICE REQUIRED FOR EACH SITE LOCATION.
3. THE INSTALLATION CONTRACTOR SHALL FURNISH ONE ADJUSTABLE VERTICAL STAND FOR EACH LOCATION WHEN THE STAND IS NOT LISTED AS GOVERNMENT FURNISHED (GFM). SEE DETAIL THIS DRAWING.

JAQUITH INDUSTRIES INC.
PO BOX 780
600 E. BRIGHTON AVE.
SYRACUSE, NEW YORK 13205
www.jaquith.com 315-478-5700

REV.LTR.	DATE	DESCRIPTION	CHECKED	APPROVED
C	7/12/05	REDRAWN IN AUTOCAD FORMAT – DA		
B	4/12/91	CHANGED ADJUSTABLE VERTICAL STAND		
A	5/10/89	MISC. CORRECTIONS		

DEPARTMENT OF TRANSPORTATION
FEDERAL AVIATION ADMINISTRATION
CENTRAL REGION – KANSAS CITY, MISSOURI

RAISING AND LOWERING OF JAQUITH NL-40 FIBERGLASS ANTENNA STRUCTURES

REVIEWED BY	SUBMITTED BY	APPROVED BY
		TECHNICAL OFFICER

DESIGNED BY
DRAWN BY
CHECKED BY

ISSUED BY
AIRWAY FACILITIES DIVISION
ENGINEERING BRANCH

DATE- 8/10/88
DRAWING NO. CE-D-7778-4
REV. LTR. C

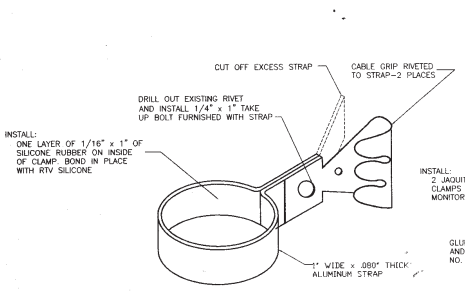

DETAIL-ALUMINUM PIPE BONDING STRAP
(ROBBINS CAT. NO. A67-8 OR EQUAL)

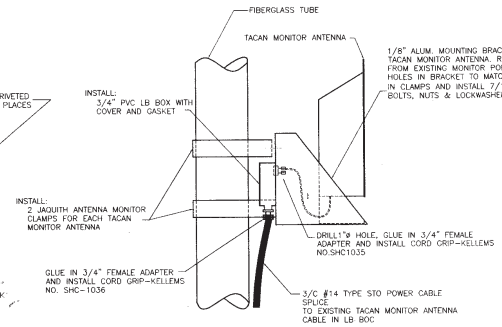

DETAIL-INSTALLATION OF TACAN MONITOR ANTENNA
(2 REQUIRED AS SHOWN)

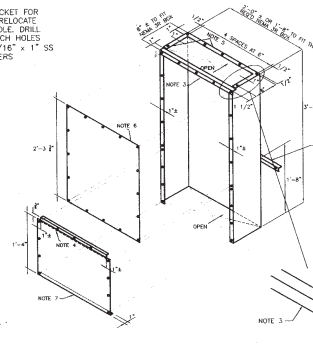

JUNCTION BOX EXTENSION DETAIL

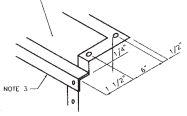

CORNER DETAIL

NOTES- FOR JUNCTION BOX EXTENSION

1. FABRICATE FROM 14 GA. STEEL & ANGLES AS INDICATED.
2. FLANGE TOP & FRONT EDGES 1"± AS INDICATED. WELD ALL JOINTS & GRIND SMOOTH
3. REINFORCE TOP OF BOX WITH ∠1 x 1 x 1/8 WELDED TO THE EXTENSION.
4. WELD ∠1 x 1 x 1/8 TO THE LOWER FRONT COVER AS SHOWN
5. BOLT JUNCTION BOX EXTENSION TO THE BOTTOM OF THE NEMA 3R BOX WITH 1/4" SS BOLT, NUT & LOCKWASHER-7 PLACES
6. UPPER FRONT COVER- ATTACH 16 PLACES WITH 1/4" SS THREAD CUTTING SCREWS.
7. LOWER FRONT COVER- ATTACH 8 PLACES WITH 1/4" SS THREAD CUTTING SCREWS.
8. JUNCTION BOX EXTENSION SHALL BE HOT DIP GALVANIZED AFTER FABRICATION.
9. FABRICATE 2 JUNCTION BOX EXTENSIONS FOR EACH FIBERGLASS ANTENNA STRUCTURE INSTALLATION.

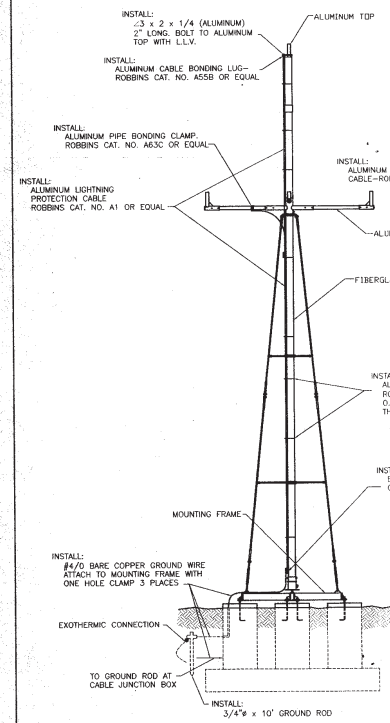

TACAN MOITOR STRUCTURE

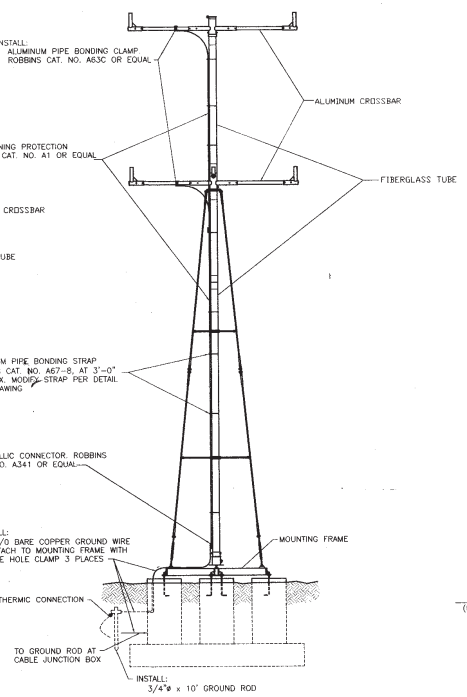

RCAG STRUCTURE
(BUEC/SFO SIMILAR)

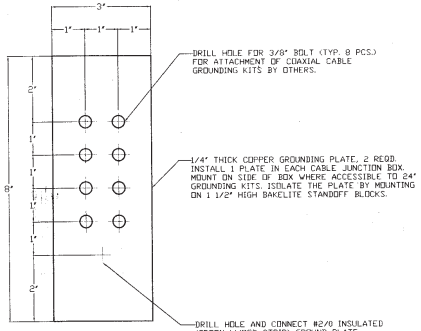

GROUNDING PLATE DETAIL
(FOR CABLE JUNCTION BOX-2 REQD.)

REV	DATE	DESCRIPTION	JOB NO.	APPROVED
1	7/7/05	REDRAWN ON AUTOCAD		DA

JAQUITH INDUSTRIES INC.
PO BOX 780
600 E. BRIGHTON AVE.
SYRACUSE, NEW YORK 13205
www.jaquith.com 315-478-5700

DEPARTMENT OF TRANSPORTATION
FEDERAL AVIATION ADMINISTRATION
CENTRAL REGION – KANSAS CITY, MISSOURI

LIGHTNING PROTECTION & MISC DETAILS JAQUITH NL-40 FIBERGLASS ANTENNA STRUCTURES

REVIEWED BY:	DESIGNED BY: NL	ISSUED BY	SUBMITTED BY:
	DRAWN BY: C.J.E.	AIRWAY FACILITIES DIVISION	
	CHECKED BY: NL	ENGINEERING BRANCH	APPROVED BY:
			DATE: 5-10-89
SECTOR:	ALPHA TY & CL / ATS LOC / AF/REM / AF/CON / R/CCC		DRAWING NO. CE-D-7778-5