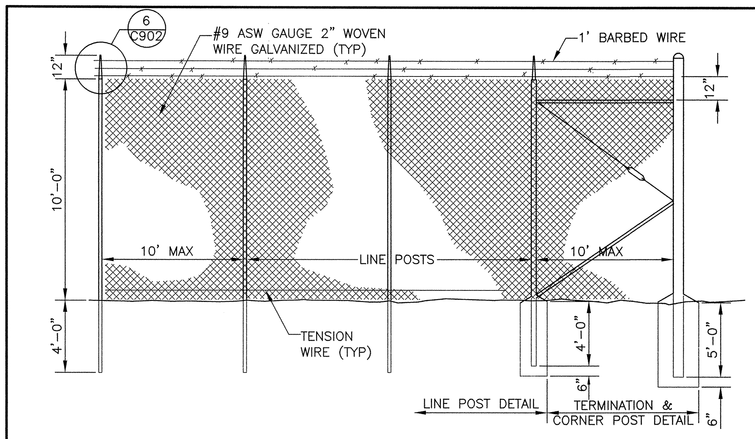

1 Q902 NEW 10FT CHAIN LINK FENCE DETAIL
SCALE: 1/4" = 1'-0"

FENCE POST SIZING SCHEDULE				
FENCE TYPE	7' & 10' HIGH FENCE			
POST USE	SHAPE	SIZE	DEPTH (INTO GND.) 7'	10'
TOP RAIL CENTER (MID) RAIL	PIPE Ø	1 5/8"	N/A	N/A
LINE POSTS	"C" SECTION	2.25"x2.25"	4'	4'
LINE POST ON EACH SIDE OF CORNER, GATE OR TERMINAL POST	PIPE Ø	3"	4'	4'
CORNER POSTS AND TERMINAL (END) POSTS	PIPE Ø	4"	4'	5'
GATE POSTS	PIPE Ø	4"	4'	5'

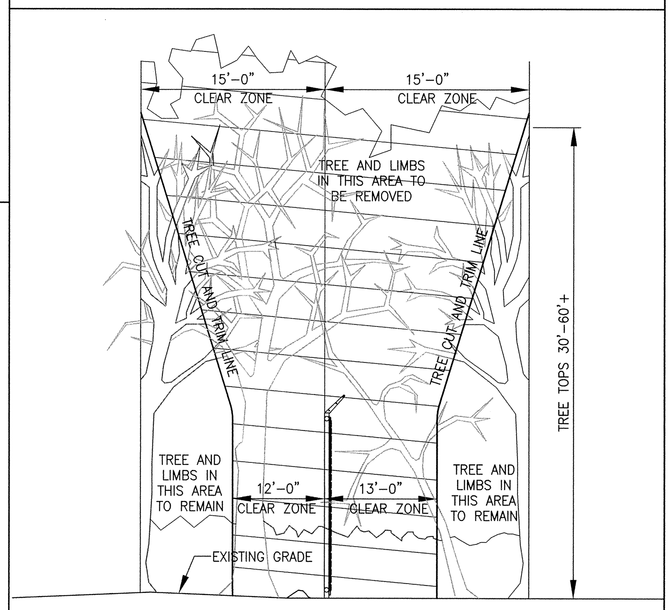

7 Q902 TREE CLEARING DETAIL
SCALE: NTS

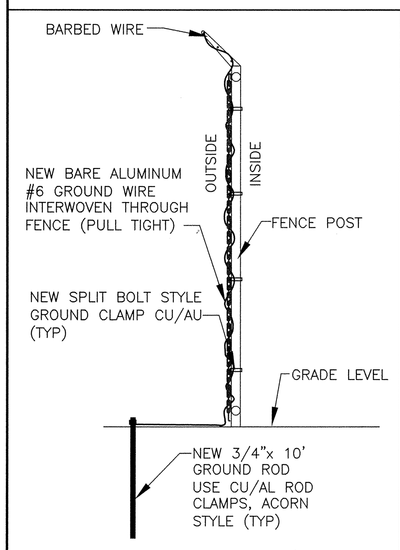

NOTE: INSTALL EVERY 500'

4 Q902 FENCE GROUNDING
SCALE: NTS

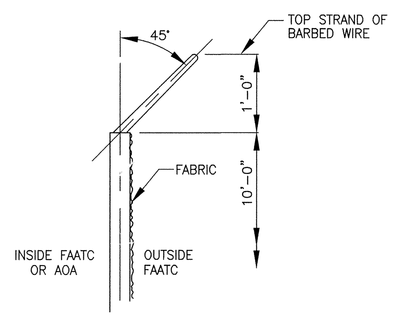

6 Q902 BARBED WIRE DETAIL
SCALE: NTS

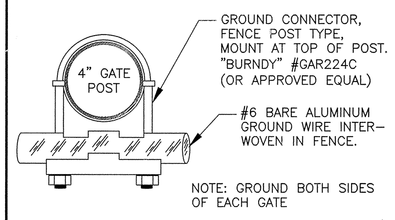

NOTE: GROUND BOTH SIDES OF EACH GATE

8 Q902 GROUNDING DETAIL
SCALE: NTS

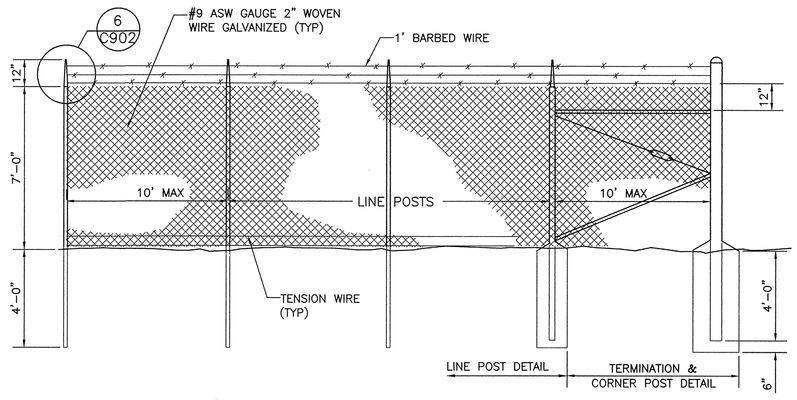

9 Q902 NEW 7' CHAIN LINK FENCE DETAIL
SCALE: N.T.S.

REV	DATE	DESCRIPTION	CHECK	APRV'D

UNITED STATES DEPARTMENT OF TRANSPORTATION
FEDERAL AVIATION ADMINISTRATION
WILLIAM J. HUGHES TECHNICAL CENTER
ATLANTIC CITY INT'L AIRPORT, N.J. 08405

328

SAFECON CRANE INSTALLATION

FENCE DETAILS

REVIEWED BY	SUBMITTED BY	DATE	APPROVED BY	DATE
	CHRISTOPHER D. SMITH, TSL-100	7/14/10	DAVE DANDO AJP-7942	7/30/10
	DESIGN: WAREJ	ISSUED BY:	DATE: 07/16/10	JCN:
	DRAWN: FOSTER J	FACILITY SERVICES & ENGINEERING DIVISION	DRAWING NO. 223018-Q902	SHEET # 5 OF 6
	CHECK:			

FOR OFFICIAL USE ONLY