ZME - MEMPHIS, TENNESSEE
PANELBOARD REPLACEMENT
AUTOMATION WING BASEMENT

DEPARTMENT OF TRANSPORTATION
UNITED STATES OF AMERICA

FEDERAL AVIATION ADMINISTRATION

REV	APPROVED DATE	DESCRIPTION	JOB	PROJECT DATE	APVD

DEPARTMENT OF TRANSPORTATION
FEDERAL AVIATION ADMINISTRATION
ATO - TECHNICAL OPERATIONS EASTERN SERVICE AREA

ARTCC
COVER SHEET

MEMPHIS MEMPHIS CENTER TN

REVIEWED BY
SUBMITTED BY: PROJECT ENGINEER
APPROVED BY: MGR: ENGINEERING - ATLANTA
DESIGNED EN
DRAWN DS
CHECKED
ISSUED BY: ENGINEERING SERVICES ENROUTE/FSS
DATE 07/06/2010
JOB 805471
DRAWING NO. ZME-D-805471-G001
REV

ISSUED FOR CONSTRUCTION

DRAWING LIST

DRAWING NO	REV	DATE	DESCRIPTION
ZME-D-805471-G001		7/06/2010	COVER SHEET
ZME-D-805471-G002		7/06/2010	INDEX SHEET
ZME-D-805471-E001		7/06/2010	ELECTRICAL POWER PLAN-DEMO
ZME-D-805471-E002		7/06/2010	PANELBOARD SCHEDULES MODIFICATIONS
ZME-D-805471-E003		7/06/2010	SINGLE LINE DIAGRAM - CRITICAL POWER DEMO
ZME-D-805471-E004		7/06/2010	PANELBOARD DEMO - NEW INSTALLATION
ZME-D-805471-E005		7/06/2010	EQUIPMENT POWER DIAGRAM

ABBREVIATIONS

SYMBOLS LEGEND

REV	APPROVED DATE	DESCRIPTION	JCN	REDUCE DATE	VTD

DEPARTMENT OF TRANSPORTATION
FEDERAL AVIATION ADMINISTRATION
ATO - TECHNICAL OPERATIONS EASTERN SERVICE AREA

ARTCC

PANELBOARD REPLACEMENT
AUTOMATION WING BASEMENT
INDEX SHEET

MEMPHIS MEMPHIS CENTER TN

REVIEWED BY
SUBMITTED BY: PROJECT ENGINEER
APPROVED BY: MGR. ENGINEERING - ATLANTA
DESIGNED EN
DRAWN DS
CHECKED
ISSUED BY: ENGINEERING SERVICES ENROUTE/FSS
DATE 07/06/2010
JCN 805471
DRAWING NO. ZME-D-805471-G002
REV

ISSUED FOR CONSTRUCTION

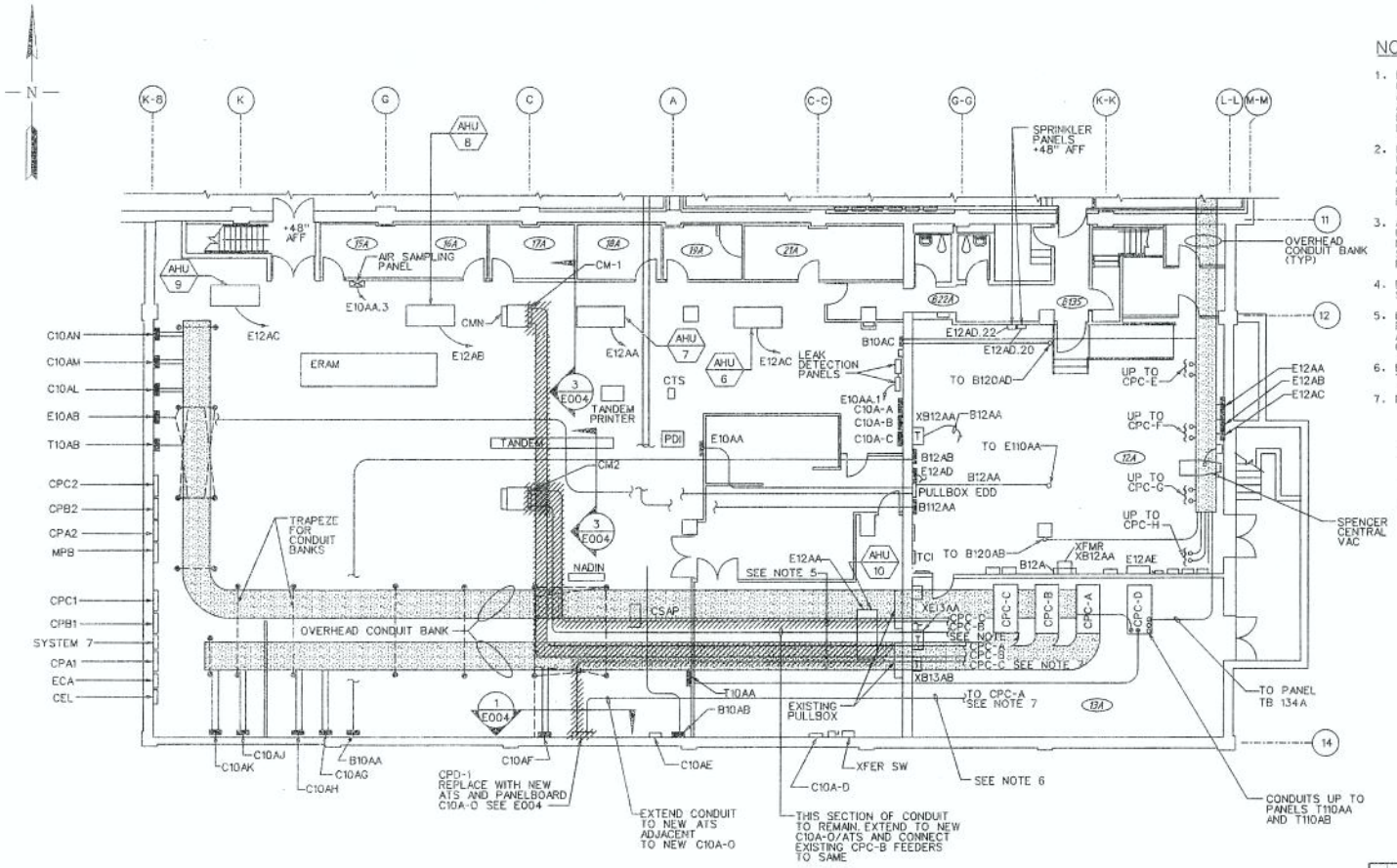

1 E001 BASEMENT - POWER PLAN

SCALE: 1/8" = 1'-0"

NOTES

1. EXTREME CAUTION MUST BE PRACTICED WHEN WORKING ON ANY OF THE ELECTRICAL POWER SYSTEMS (CRITICAL, ESSENTIAL AND BUILDING SERVICE) AS THIS IS A FULLY OPERATIONAL AIR ROUTE TRAFFIC CONTROL CENTER AND ANY UNAUTHORIZED ELECTRICAL OUTAGE MAY CAUSE ACCIDENTS AND/OR LOSS OF LIVES.
2. ONLY FAA PERSONNEL MAY OPERATE CIRCUIT BREAKERS. CPC'S WILL BE OPERATED BY FAA TO ALLOW FOR HARDWARE DEMOLITION. CONTRACTOR SHALL REQUEST PERMISSION OF FAA 48 HOURS IN ADVANCE AND IN WRITING FOR EACH CASE OF BREAKER OPERATION. THE CONTRACTOR SHALL NOT OPEN NOR CLOSE ANY CIRCUIT BREAKER AT ANY TIME.
3. ALL DISCONNECTIONS IN CPC-A, B AND C MUST BE MADE UNDER DIRECT SUPERVISION OF THE FAA PERSONNEL AFTER NORMAL WORKING HOURS 11:30 PM TO 6 AM. SEE E005 FOR SEQUENCE OF DEMO, INTERIM AND FINAL POWER CONFIGURATION.
4. DEMOLITION OF FEEDERS AND CONDUITS IS LIMITED TO EXTENT SHOWN ON PLAN.
5. DEMO CONDUITS TO OUTSIDE OF ROOM 13A. DEMO EXISTING FEEDERS TO CPC-A, CPC-B AND CPC-C FROM CM-1 AND CM-2 ATS/ PANELBOARDS, EXCEPT AS NOTED FOR CPC-B FEEDER/ CONDUIT FROM CM-2.
6. EXISTING CONDUIT/FEEDER TO REMAIN FOR RECONNECTION TO NEW ATS/ PANELBOARD.
7. FIELD VERIFY CONDUIT/FEEDER DESTINATION.

LEGEND

EXISTING
NEW WORK
DEMO

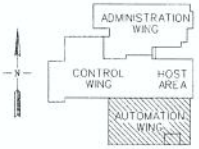

KEY PLAN

REV	APPROVED DATE	DESCRIPTION	JOB	INITIAL DATE	APVD

DEPARTMENT OF TRANSPORTATION
FEDERAL AVIATION ADMINISTRATION
ATO - TECHNICAL OPERATIONS EASTERN SERVICE AREA

ARTCC
PANELBOARD REPLACEMENT
AUTOMATION WING BASEMENT
ELECTRICAL POWER PLAN-DEMO

MEMPHIS MEMPHIS CENTER TN

REVIEWED BY
SUBMITTED BY: PROJECT ENGINEER
APPROVED BY: MGR: ENGINEERING - ATLANTA
DESIGNED EN
DRAWN DS
CHECKED
ISSUED BY: ENGINEERING SERVICES ENROUTE/FSS
DATE 07/06/2010
JOB 805471
DRAWING NO. ZME-D-805471-E001
REV

ISSUED FOR: CONSTRUCTION

② EXISTING PANEL CM-1

VOLTAGE: 208/120V 3 PHASE - 4 WIRE

M.L.O. FED FROM CPC-B(F) CPC-A(F)

LOCATION: AUTO WING 10A

FUNCTION	BREAKER POLE	BREAKER AMP	CKT NO.	BUS CONN.	CKT NO.	BREAKER AMP	BREAKER POLE	FUNCTION
SPARE	1	20	1	A B C	2	15	1	CTS ①
	1	20	3		4	15	1	SPARE
	1	30	5		6	20	1	
	1	30	7		8	20	1	
	1	30	9		10	20	1	
	1	30	11		12	20	1	
	1	30	13		14	15	1	
	1	30	15		16	15	1	
	1	30	17		18	15	1	
	1	15	19		20	20	1	
	1	20	21		22	15	1	SPARE
	2	15	23		24	15	3	SPARE
			25		26			
		20	27		28			
		15	29		30	15	3	SPARE
		15	31		32			
SPARE		15	33		34			
SPARE	3	15	35		36	15	3	SPARE
			37		38			
			39		40			
BLANK			41		42			BLANK

EXISTING PANEL C10A-M

VOLTAGE: 208/120V 3 PHASE - 4 WIRE

MLO FED FROM CPC-A CPC-B

LOCATION: AUTO WING 10A

	FUNCTION	BREAKER POLE	BREAKER AMP	CKT NO.	BUS CONN.	CKT NO.	BREAKER AMP	BREAKER POLE	FUNCTION	
				1	A B C	2				
		3	30	3		4	20	3		
				5		6				
				7		8				
④	NADIN II - TEMPORARY	3	30	9		10	30	3		
				11		12				
		1	20	13		14	20		RUMS RECPTACLE(TEMPORARY)	SEE E005
		1	20	15		16	20			
		1	20	17		18	20			
		1	20	19		20	20			
		1	20	21		22	20			
		1	20	23		24	20			
		1	20	25		26	20			
		1	20	27		28	20			
SEE E005	NADIN 1 - TEMPORARY	1	20	29		30	20	1	NADIN EQPT(TEMPORARY)	SEE E005
		1	20	31		32	20			
		1	20	33		34	20			
		1	20	35		36	20			
		1	20	37		38	20			
		1	20	39		40	20			
		1	20	41		42	20			

NOTES

1. DEMO BRANCH CIRCUIT CONDUCTORS AND CONDUIT SEE E005 FOR TEMPORARY POWER AND RELOCATION.
2. DEMO ATS AND PANELBOARD. SEE E001.
3. REPLACE WITH NEW ATS AND PANELBOARD SEE 2/E004 AND 4/E004.
4. CONNECT TO EXISTING 3P-30A CIRCUIT BREAKER IN C10A-M FOR NADIN II TEMPORARY POWER.
5. ADD NEW BRANCH CIRCUITS. SEE E005.
6. C10A-O IS A NEW PANELBOARD FOR REPLACEMENT OF THE OLD CPD-1 PANELBOARD (NOTE 2)

② EXISTING PANEL CM-2

VOLTAGE: 208/120V 3 PHASE - 4 WIRE

MLO FED FROM CPC-B(F) CPC-C(F)

LOCATION: AUTO WING 10A

	FUNCTION	BREAKER POLE	BREAKER AMP	CKT NO.	BUS CONN.	CKT NO.	BREAKER AMP	BREAKER POLE	FUNCTION	
①	CTS	1	15	1	A B C	2	15	1	SPARE	
	SPARE	1	15	3		4	15	1		
		1	15	5		6	15	1		
		1	15	7		8	15	1		
		1	15	9		10	15	1		
		1	15	11		12	15	1		
	SPARE	1	15	13		14	15	1		
①	TANDEM PRINTER/TERMINAL	1	15	15		16	15	1		
	SPARE	1	15	17		18	15	1	SPARE	
		1	15	19		20	20	1	RUMS CABINET, RECEPT	①
		1	20	21		22	20	1	SPARE	
		1	15	23		24	15	1		
		1	15	25		26	15	1		
	SPARE	1	15	27		28	15	1		
①	NADIN-1	2	15	29		30	15	3	SPARE	
				31		32				
	SPARE	1	15	33		34				
	SPARE	3	15	35		36	15	3	SPARE	
				37		38				
				39		40				
	BLANK			41		42			BLANK	

②③ EXISTING PANEL CPD-1

VOLTAGE: 208/120V 3 PHASE - 4 WIRE

MAIN BREAKER-AMPS FED FROM CPC-A(F) CPC-C(F)

LOCATION: AUTO WING 10A

	FUNCTION	BREAKER POLE	BREAKER AMP	CKT NO.	BUS CONN.	CKT NO.	BREAKER AMP	BREAKER POLE	FUNCTION	
①	MWP			1	A B C	2	20	1	NADIN RECEPT	①
①	NADIN RECEPT	1	30	3		4	20	1	NADIN RECEPT	①
①	NADIN AND AIS EQUIP	1	20	5		6	20	1	NADIN EQUIPMENT	①
①	NADIN II	3	30	7		8	15	3	SPARE	
				9		10				
				11		12				
	SPARE	3	15	13		14	15	3	SPARE	
				15		16				
				17		18				
	SPARE	3	15	19		20	15	3	SPARE	
				21		22				
				23		24				
	SPARE	3	15	25		26	15	3	SPARE	
				27		28				
				29		30				
	SPARE	1	15	31		32	100	3	SPARE	
	SPARE	1	15	33		34				
	SPARE	1	15	35		36				
	SPARE	3	15	37		38	20	1	SPARE	
				39		40	15	1	SPARE	
				41		42	15	1	SPARE	

⑥ NEW PANEL C10A-O

VOLTAGE: 208/120V 3 PHASE - 4 WIRE AIC 10000 AMPS

MAIN BREAKER-150 AMPS FED FROM CPC-A,CPC-B WITH BOTTOM FEED

LOCATION: AUTO WING 10A

	FUNCTION	BREAKER POLE	BREAKER AMP	CKT NO.	BUS CONN.	CKT NO.	BREAKER AMP	BREAKER POLE	FUNCTION	
	SPARE			1	A B C	2	20	1	RUMS RECEPTACLE	
	SPARE	1	30	3		4	20	1	NADIN-1	
	SPARE	1	20	5		6	20	1	NADIN EQPT	
⑤	NADIN II	3	30	7		8	15	3	SPARE	
		-	-	9		10	-	-		
		-	-	11		12	-	-		
⑤	TANDEM MONITOR/PRINTER	1	15	13		14	15	1	CTS	⑤
	SPARE	1	15	15		16	20	1	SPARE	
	SPARE	2	15	17		18	20	1		
				19		20	20	1		
	SPARE	1	15	21		22	30	1		
		1	20	23		24	30	1		
		1	20	25		26	30	1		
		1	20	27		28	30	1		
		1	20	29		30	15	2	SPARE	
		1	15	31		32				
		1	15	33		34	15	2	SPARE	
		1	15	35		36				
		1	15	37		38	30	3	SPARE	
		1	15	39		40				
	SPARE	1	15	41		42				

REV	APPROVED DATE	DESCRIPTION	ADI	RECEIVE DATE	APVD

DEPARTMENT OF TRANSPORTATION
FEDERAL AVIATION ADMINISTRATION
ATO - TECHNICAL OPERATIONS EASTERN SERVICE AREA

ARTCC

PANELBOARD REPLACEMENT
AUTOMATION WING BASEMENT
PANELBOARD SCHEDULES MODIFICATIONS

MEMPHIS MEMPHIS CENTER TN

REVIEWED BY | SUBMITTED BY: PROJECT ENGINEER | APPROVED BY: MGR- ENGINEERING - ATLANTA

DESIGNED EN | DRAWN DS | CHECKED | ISSUED BY: ENGINEERING SERVICES ENROUTE/FSS | DATE 07/06/2010 | DRAWING NO. ZME-D-805471-E002 | SEQN. 805471 | REV

ISSUED FOR CONSTRUCTION

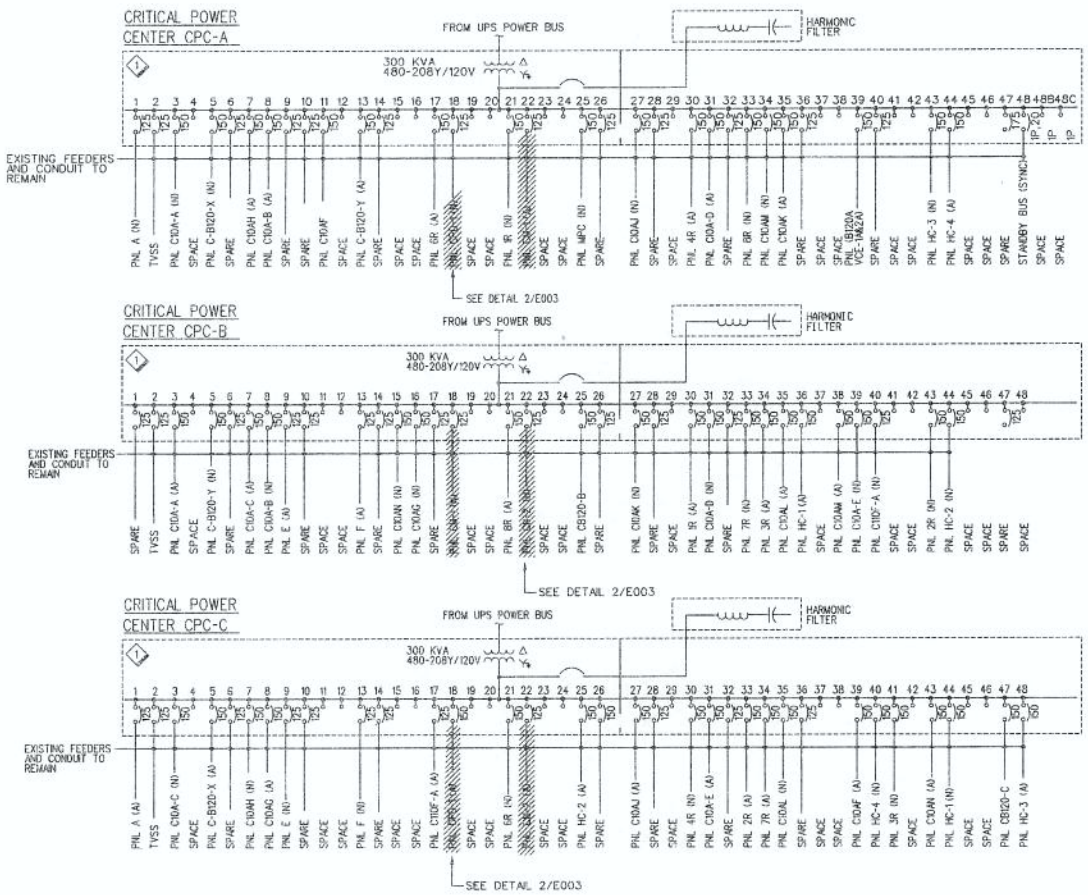

1 E003 CRITICAL POWER SINGLE LINE
NOT TO SCALE

GENERAL NOTES

A. ONLY FAA PERSONNEL MAY OPERATE CIRCUIT BREAKERS. CONTRACTOR SHALL SUBMIT ALL REQUESTS FOR CIRCUIT BREAKER OPERATION TO THE FAA IN WRITING 48 HOURS IN ADVANCE OF THE WORK BEING PERFORMED. CONTRACTOR SHALL NOT OPEN OR CLOSE ANY CIRCUIT BREAKER AT ANY TIME.

B. THIS SINGLE LINE DIAGRAM WAS DEVELOPED UTILIZING EXISTING DRAWINGS AND WAS NOT ENTIRELY FIELD VERIFIED. INFORMATION PERTINENT TO THIS CONSTRUCTION PROJECT WAS FIELD VERIFIED BY SITE SURVEY ON 02/05/10. COORDINATE ANY DISCREPANCIES WITH THE COR.

SHEET NOTES

1. EXISTING CRITICAL POWER CENTER (CPC) OUTPUT SECTION IS GENERAL ELECTRIC AV/2 LINE SWITCHBOARD. 1000A SECTIONS AND NEUTRAL BUS 480V DELTA PRIMARY- 208Y/120V, 3PH, 4W SECONDARY. EXISTING CIRCUIT BREAKERS ARE TYPE TFJ236150, 25K AIC, 240V.

2. DISCONNECT AND REMOVE EXISTING FEEDERS FROM CRITICAL POWER PANELS AND ATS'S BACK TO CPC'S AS INDICATED.

3. REMOVE DESIGNATED 2" CONDUITS ONLY FROM PANELS CPD-1, CM-1, CM-2 BACK TO THE WEST WALL OF ROOM 10A. REFER TO DWG E001 FOR EXTENT OF DEMOLITION. REMAINING EXISTING CONDUIT WILL BE REUSED FOR NEW WORK.

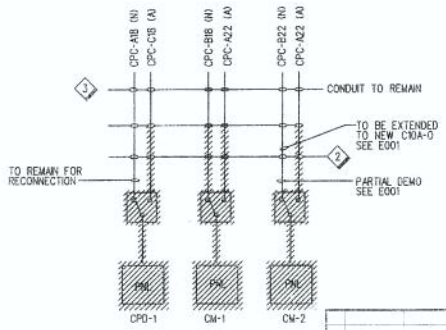

2 E003 DEMO DETAIL
NOT TO SCALE

REV	APPROVED DATE	DESCRIPTION	JOB	REDUCE DATE	REV

DEPARTMENT OF TRANSPORTATION
FEDERAL AVIATION ADMINISTRATION
ATO - TECHNICAL OPERATIONS EASTERN SERVICE AREA

ARTCC
PANELBOARD REPLACEMENT
AUTOMATION WING BASEMENT
SINGLE LINE DIAGRAM CRITICAL POWER DEMO

MEMPHIS MEMPHIS CENTER TN

REVIEWED BY | SUBMITTED BY: PROJECT ENGINEER | APPROVED BY: MGR: ENGINEERING - ATLANTA
DESIGNED EN | DRAWN DS | CHECKED | ISSUED BY: ENGINEERING SERVICES ENROUTE/FSS | DATE 07/06/2010 | JOB 805471 | DRAWING NO. ZME-D-805471-E003 | REV

ISSUED FOR: CONSTRUCTION

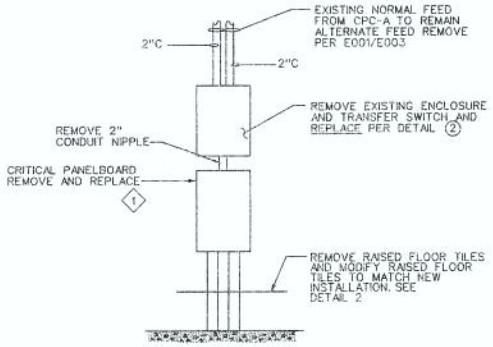

1 E004 EXISTING CRITICAL POWER ATS/PANELBOARD- CPD-1

NOT TO SCALE

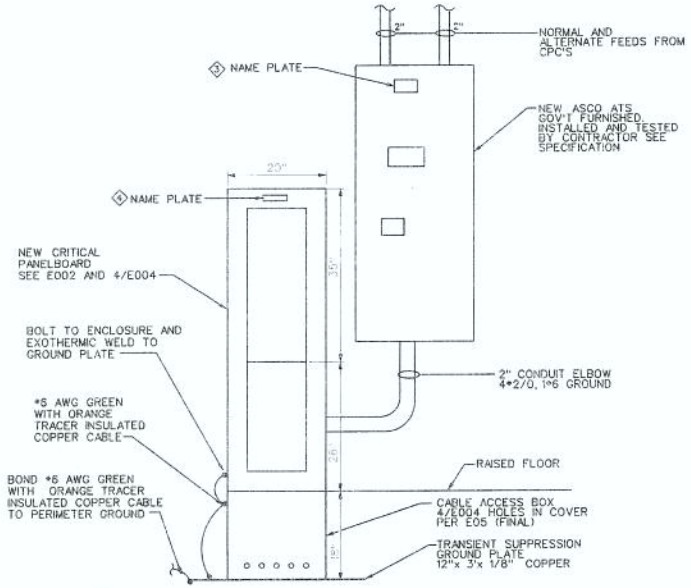

2 E004 NEW CRITICAL POWER ATS/PANELBOARD- C10A-O 5

SCALE: 1"=1'-0"

NOTES

1. EXISTING CRITICAL POWER BRANCH CIRCUITS SHALL BE REMOVED AND REPLACED PER E002/E005.
2. TRANSIENT SUPPRESSION GROUND PLATE TO BE IDENTIFIED WITH A PERMANENTLY ATTACHED PLASTIC LABEL THAT IS GREEN WITH BRIGHT ORANGE SLASHES AND MARKED "MULTIPOINT GROUND SYSTEM".
3. TYPICAL NAME PLATE ON TRANSFER SWITCHES:

   C10A-O — PANEL

   CPC-A NORMAL | CPC-B EMERGENCY

4. TYPICAL NAMEPLATE FOR PANELBOARD

   C10A-O
   208/120 VOLTS
   3 PHASE

5. C10A-O IS A NEW PANELBOARD FOR REPLACEMENT OF OLD CPD-1 PANELBOARD

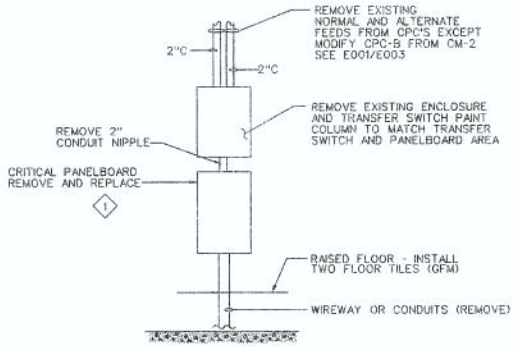

3 E004 EXISTING CRITICAL POWER ATS/PANELBOARD- CM-1, CM-2

NOT TO SCALE

TYPICAL PANELBOARD INSTALLATION THIS DESIGN BASED ON USING A SQUARE D 77" TALL PANEL BOARD CAN. RELOCATE MOUNTING BOLTS TO ACCOMMODATE THE SHORTER PANEL. DOOR IN DOOR COVERS PART OF HINGED FRONT. BOTTOM DOOR OPENS ABOVE RAISED FLOOR.

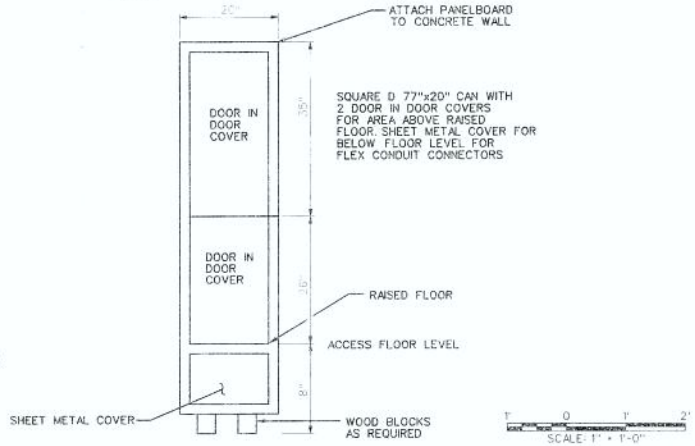

4 E004 C10A-O PANELBOARD CAN AND CABLE ACCESS BOX DETAIL

SCALE 1"=1'-0"

DEPARTMENT OF TRANSPORTATION
FEDERAL AVIATION ADMINISTRATION
ATO - TECHNICAL OPERATIONS — EASTERN SERVICE AREA

ARTCC
PANELBOARD REPLACEMENT
AUTOMATION WING BASEMENT
PANELBOARD DEMO - NEW INSTALLATION

MEMPHIS — MEMPHIS CENTER — TN

PROJECT ENGINEER — MGR: ENGINEERING - ATLANTA

ENGINEERING SERVICES ENROUTE/TSS — 07/06/2010 — 805471

ZME-D-805471-E004

ISSUED FOR CONSTRUCTION

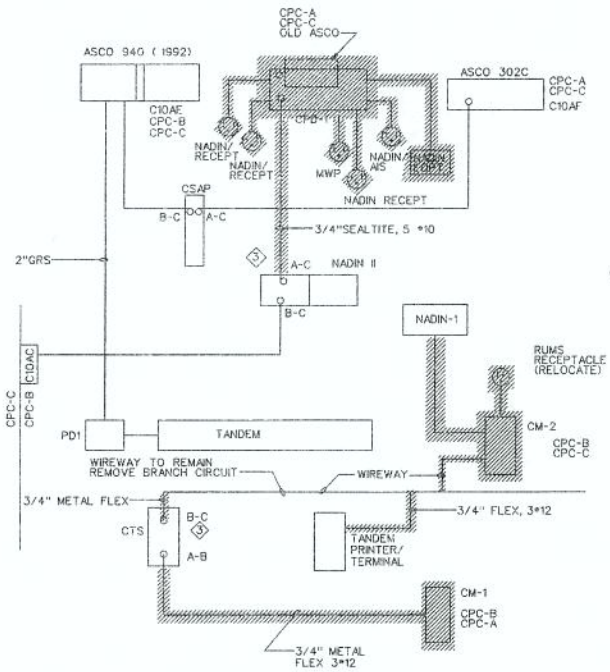

1 E005 CRITICAL PANELS - EXISTING POWER DIAGRAM
NOT TO SCALE

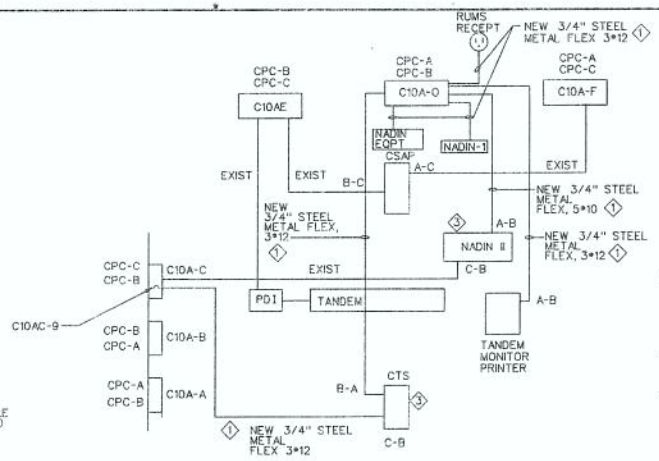

3 E005 CRITICAL PANELS - FINAL POWER DIAGRAM
NOT TO SCALE

GENERAL NOTES

A. NEW CRITICAL FEEDER CONDUCTORS SHALL BE TYPE THHN (TYP). DO NOT SPLICE CONDUCTORS BETWEEN ORIGINATION AND END POINTS.

B. ONLY FAA PERSONNEL MAY OPERATE CIRCUIT BREAKERS. CONTRACTOR SHALL SUBMIT ALL REQUESTS FOR CIRCUIT BREAKER OPERATION TO THE FAA IN WRITING 48 HOURS ADVANCE OF THE WORK BEING PERFORMED. CONTRACTOR SHALL NOT OPEN OR CLOSE ANY CIRCUIT BREAKER AT ANY TIME.

NOTES

1. CONTRACTOR TO INSTALL 3/4" STEEL METAL FLEX WITH CONNECTOR (STEEL CITY XC-842) AND BRANCH CIRCUITS TERMINATE THE FLEX TO UNDERFLOOR CABLE ACCESS BOX COVER AND PROVIDE EXCESS CONDUCTOR LENGTHS FOR TERMINATION BY FAA-ESU TECHNICIAN.
2. CONTRACTOR TO REMOVE TEMPORARY FEEDS AFTER FAA-ESU DISCONNECTS AT CUT-OVER TO C10A-O.
3. ONLY ONE POWER SOURCE MAY BE DE-ENERGIZED AT A TIME TO PREVENT ANY EQUIPMENT OUTAGES.

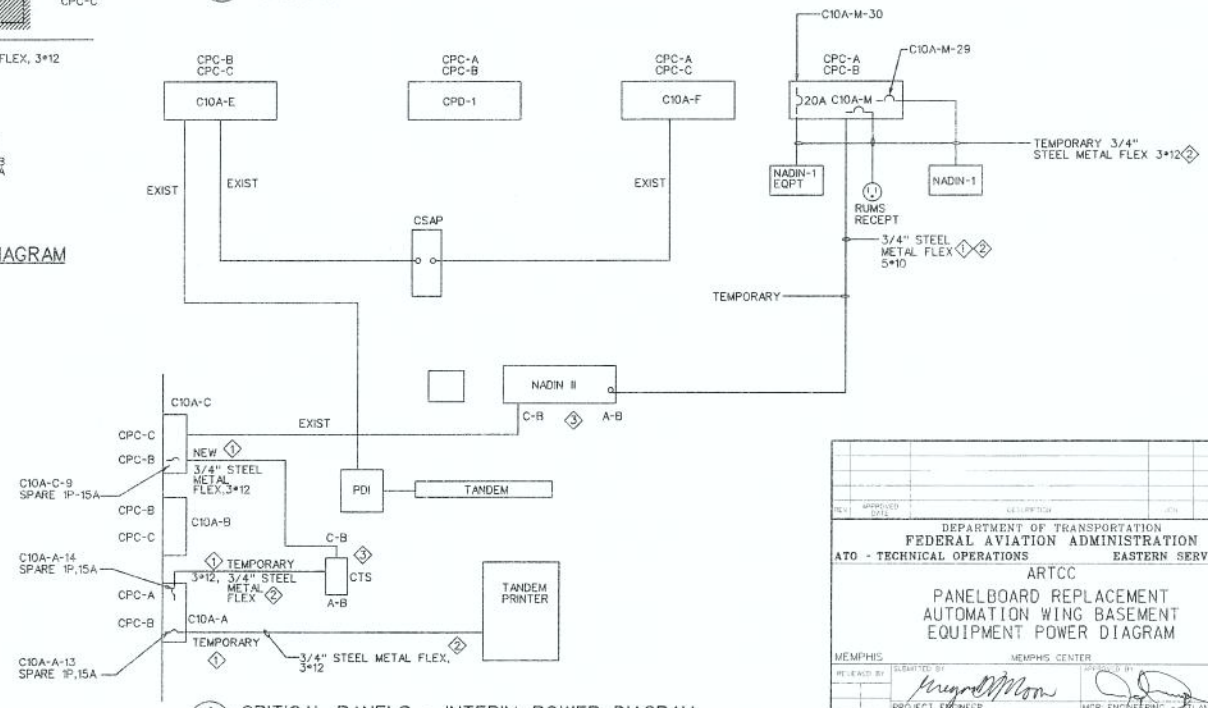

2 E005 CRITICAL PANELS - INTERIM POWER DIAGRAM
NOT TO SCALE

REV	APPROVED DATE	DESCRIPTION	JOB	RELEASE DATE	APVD

DEPARTMENT OF TRANSPORTATION
FEDERAL AVIATION ADMINISTRATION
ATO - TECHNICAL OPERATIONS EASTERN SERVICE AREA

ARTCC
PANELBOARD REPLACEMENT
AUTOMATION WING BASEMENT
EQUIPMENT POWER DIAGRAM

MEMPHIS MEMPHIS CENTER TN

RELEASED BY
SUBMITTED BY: PROJECT ENGINEER
APPROVED BY: MGR ENGINEERING - ATLANTA
DESIGNED EN
DRAWN DS
CHECKED
ISSUED BY: ENGINEERING SERVICES ENROUTE/FSS
DATE 07/06/2010
JOB 805471
DRAWING NO. ZME-D-805471-E005
REV

ISSUED FOR CONSTRUCTION