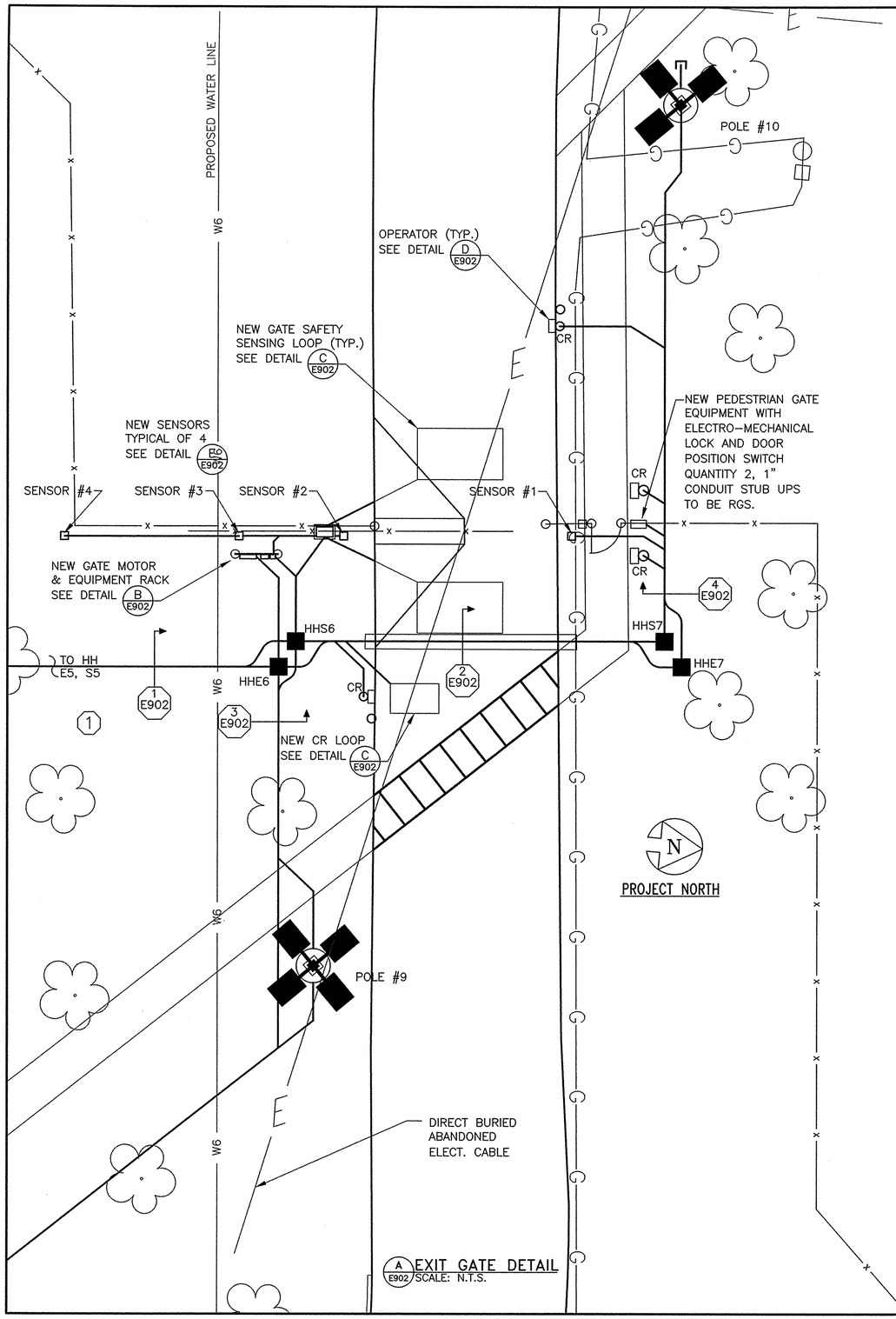

A E902 EXIT GATE DETAIL
SCALE: N.T.S.

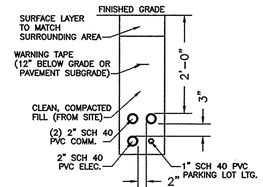

1 DIRECT BURIED DUCTS

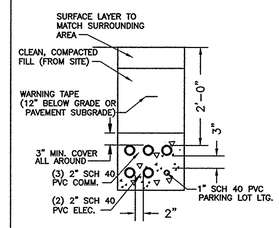

2 CONCRETE ENCASED DUCTS

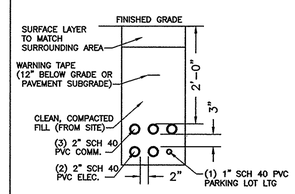

3 DIRECT BURIED DUCTS

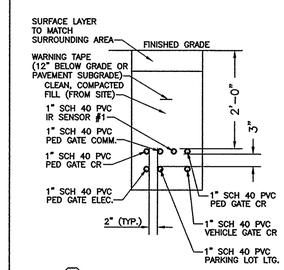

4 DIRECT BURIED DUCTS

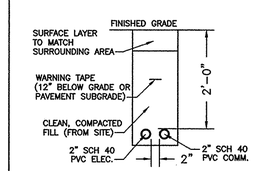

5 DIRECT BURIED DUCTS

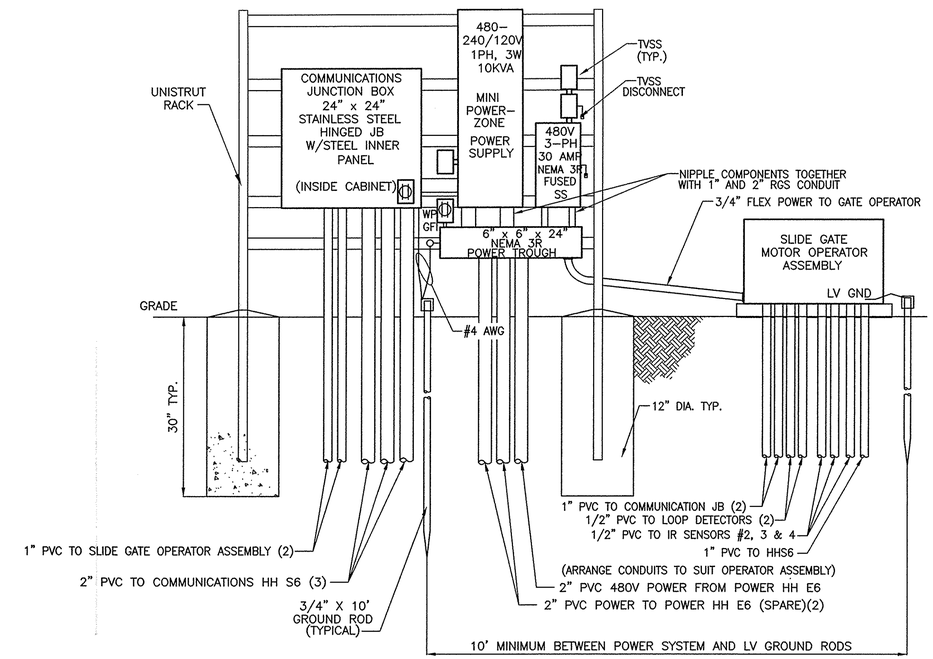

B E902 GATE EQUIPMENT RACK DETAIL
SCALE: N.T.S.

LOOP DESCR.	QTY. REQ.	LOOP LENGTH	LOOP WIDTH	WIRE SIZE	NO. OF TURNS	LOOP LOCATION
GATE SAFETY	2	12'	6'	#12	3 TO 4	NEAR EDGE 4' TO 6' CENTERED IN ROADWAY WIDTH
CARD READER	1	6'	4'	#12	3 TO 4	NEAR EDGE 3' TO 4' FROM ROAD EDGE. CENTER OF LOOP CENTERED ON CARD READER

NOTES:
1. ALL LOOP CONDUCTORS TO BE TYPE XHHW (CROSS-LINKED POLYETHELYNE INSULATION)
2. ALL LOOP LEAD-INS TO BE TWISTED PAIRS, STARTING FROM LOOP, WITH 8-10 TWISTS PER FOOT.
3. ALL LOOP LEAD-INS SHALL BE LONG ENOUGH TO REACH THE LOOP'S FINAL CONNECTION POINT WITHOUT SPLICING.
4. INSTALL FOAM BACKER ROD ABOVE ALL CONDUCTORS IN PAVEMENT AND SEAL WITH FLEXIBLE JOINT SEALANT.
5. COORDINATE FINAL LOOP INSTALLATION DETAILS WITH LOOP DETECTOR MANUFACTURER.

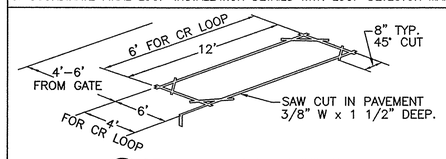

C E902 SENSING LOOP DETAIL
SCALE: N.T.S.

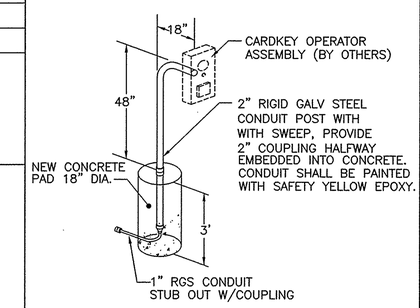

D E902 CARDKEY OPERATOR (CR) DETAIL
SCALE: N.T.S.

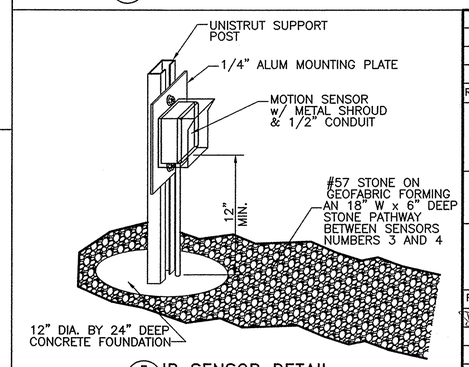

E E902 IR SENSOR DETAIL
SCALE: N.T.S.

REV	DATE	DESCRIPTION	CHECK	APRV'D

UNITED STATES DEPARTMENT OF TRANSPORTATION
FEDERAL AVIATION ADMINISTRATION
WILLIAM J. HUGHES TECHNICAL CENTER
ATLANTIC CITY INT'L AIRPORT, N.J. 08405

315

REPLACEMENT OF OUTBOUND GATES

GATE ELECTRICAL DETAILS

REVIEWED BY	SUBMITTED BY	DATE	APPROVED BY	DATE
DAO 5/4/07	Pete Saraceni 5/7/07		Dave Dando PE 5/4/07	
	PETE SARACENI TSL 1		DAVE DANDO, SUPV	AJP-7545
	DESIGN: OLSEN D	ISSUED BY: FACILITY SERVICES & ENGINEERING DIVISION	DATE: 05/04/07	JCN:
	DRAWN: FOSTER J		DRAWING NO. 135999-E902	SHEET # 11 OF 13
	CHECK: DAO			

C:\projdens\135999\e902.dwg, 5/4/2007 10:38:28 PM, FOSTERJ