ATTACHMENT 2 as shown in
Section J of
DTFAAC-11-R-53483

POWER DISTRIBUTION UNIT
TABLE OF CONTENTS

DRAWING NAME:	DRAWING NUMBER:	TOTAL PAGES:
BILL OF MATERIALS:	LRR-000067-0002	3
PDU CHASSIS:	LRR-000067-0003	24
	LRR-001118-0201	1
CABLES/HARNESSES:		
PARTS	LRR-000067-0004	1
CABLE	LRR-000067-0005	1
CABLE	LRR-000067-0006	1
HARNESS	LRR-000067-0007	1
HARNESS	LRR-000067-0008	1
HARNESS	LRR-000067-0009	1
HARNESS	LRR-000067-0010	1
HARNESS	LRR-000067-0011	1
HARNESS	LRR-000067-0012	1
HARNESS	LRR-000067-0013	1
WIRES	LRR-000067-0014	1
WIRES	LRR-000067-0015	1
WIRES	LRR-000067-0016	2
WIRES	LRR-000067-0017	1
CIRCUIT BOARDS:	LRR-000067-0018	3
	AE-B-2044	3
ASSEMBLY/WIRE ROUTING NOTES:	LRR-000067-0019	1
	LRR-000067-0020	1
	LRR-000067-0021	1
	LRR-000067-0022	1
	LRR-000067-0023	1
ASSEMBLY PROCEDURES	LRR-000067-0024	1
TEST AND CHECKOUT PROCEDURES	LRR-000067-0025	3
TEST TABLES	LRR-000067-0026	1
PSM/PS FUNCTIONAL TEST	LRR-000067-0028	7

POWER DISTRIBUTION UNIT
TABLE OF CONTENTS

LRR-000067-0001 C

Item	QTY	Name	Manufacturer	Part Number
1	208	Grady Labels, 125-175 Dimension Yellow	Brady	PSPT-125-175YL
2	8	Grady Labels, 275-175 Dimension Yellow	Brady	PSPT-275-175YL
3	20'	Cable, 7 Conductor 24AWG Gold Shield	Belden	9537
4	1	Connector, Circular, Electroless Nickel Finish, Female Box Mount Receptacle		D38999/20FD18SN
5	1	Connector, Circular, Electroless Nickel Finish, Female Box Mount Receptacle		D38999/20FD19SN
6	1	Connector, Circular, Electroless Nickel Finish, Female Box Mount Receptacle		D38999/20FE97SN
7	1	Connector, Circular, Electroless Nickel Finish, Male Box Mount Receptacle		D38999/20FD19PN
8	1	Connector, DB15, Electric, Rectangular Female Receptacle		M24308/2-3F
9	1	Connector, DE-9, Electric, Rectangular, Female Receptacle		M24308/2-7F
10	8	Contact, Electrical Connector, Pin, Crimp Removable, 20AWG Wire		M39029/58-363
11	24	Contact, Electrical Connector, Socket, Crimp Removable, 20AWG Wire		M39029/58-361
12	8	Crimp Terminal, 22-24AWG	Molex	62111-2100
13	14	Contact, Electrical Connector, Socket, Crimp Removable, 16AWG Wire		M39029/58-408
14	8	Crimp Terminal, 22-24AWG	Hexcel	CR11-278C
15	2	Housing, 16 Conductor Connector, 3mm Dual Crimp	Hexcel	CR11-1006-2C
16	3	Housing, 8 Conductor Connector, 0.1"	Molex	08142-0806
17	1	Housing, 4 Position, 0.100" Pitch	Molex	50736-0044
18	1	Knob, Dial Style Funnel For Spinner	Stanford	1R5005-R3MB
19	10	Quick Connect, Female, Insulated Nylon, 14AWG - 16AWG Blue	Thomas & Betts	14R9-257T
20	2	Quick Connect, Female, Insulated Nylon, 16AWG - 22AWG, Red	Thomas & Betts	16R4-257T
21	2	Quick Connect, Male, Insulated, Nylon, 16AWG - 22AWG, Red	Thomas & Betts	16R4-257T
22	8	Ring Terminal, Insulated, Nylon, 14AWG - 16AWG, Blue, #10 Stud	Thomas & Betts	R14-10
23	20	Ring Terminal, Insulated, Nylon, 14AWG - 16AWG, Blue, #4 Stud	Thomas & Betts	R14-4
24	40	Ring Terminal, Insulated, Nylon, 14AWG - 16AWG, Blue, #6 Stud	Thomas & Betts	R14-6
25	1	Ring Terminal, Insulated, Nylon, 14AWG - 16AWG, Blue, 1/4" Stud	Thomas & Betts	R14-14
26	100	Ring Terminal, Insulated, Nylon, 16AWG - 22AWG, Red, #6 Stud	Thomas & Betts	R18-6
27	3	RJ45 Plug, VFI - 1501 Shielded 8P8C	VFI	8-PLG-SCLID-SH
28	3	RJ45 Protective Boot, Black	Blackbird	PMT705
29	1	Rotary Switch	Grayhill	44A36-03-3-BH
30	8'	VFI - CAT6 Cable, Dual Conductors, Twisted Pair, Shielded, Cat6	VFI	CAT6-DUL-S/UTP-SCL-CMR/CAT
31	40'	Wire, Hook-Up, MIL-W-16878E, 14AWG, Stranded, TFE Jacket, Black	Aerowire	8050-J
32	713.0 '	Wire, Hook-Up, MIL-W-16878E, 14AWG, Stranded, TFE Jacket, Green	Aerowire	8050-4
33	713.7 5'	Wire, Hook-Up, MIL-W-16878E, 14AWG, Stranded, TFE Jacket, White	Aerowire	8050-1
34	1446 5'	Wire, Hook-Up, MIL-W-16878E, 20AWG, Stranded, TFE Jacket, White	Aerowire	8050-1
35	1061'	Wire, Hook-Up, MIL-W-16878E, 22AWG, Stranded, TFE Jacket, White	Aerowire	8050-1

DRAWN - REV2

FEDERAL AVIATION ADMINISTRATION
ASR 9 MONITOR SVC - ELN DT
DEARBORN CTL BF TOWER

POWER DISTRIBUTION UNIT
TOTAL BILL OF MATERIALS

D | LRR-000067-C002 | A

Item	QTY	Name	Manufacturer	Part Number
35	21	#10-32 x 0.50 Clinch Stud	Penn Engineering	PH-032-8
36	21	#10-32 SS Hex Nut		
37	32	#4 Flat Washers		
38	16	#4 SS Narrow Flat Washer		
39	40	#4 SS Split Washer		
40	37	#4-40 Nuts, Stainless Steel		
41	32	#4-40 Screws, 3/4", Pan-Head Phillips, Stainless Steel		
42	10	#4-40 SS Hex Nut		
43	4	#4-40 x 0.25 in Stainless Flat Countersunk Screw		
44	28	#4-40 x 0.25 in SS Phillips Panhead Screw		
45	4	#4-40 x 0.375 Jack Screw		
46	4	#4-40 x 0.50 Standoff	Penn Engineering	SSO4-440-15
47	32	#4-40 x 0.625 in SS Phillips Panhead Screw		
48	35	#4-40 x 0.875 Standoff	Penn Engineering	SSO4-440-30
49	4	#8 SS Flat Washer		
50	4	#8 SS Split Washer		
51	43	#6-32 Clinch Nut	Penn Engineering	CLS-632-2
52	4	#6-32 SS Hex Nut		
53	40	#6-32 x 0.375 in Stainless Flat Countersunk Screw		
54	4	#6-32 x 0.375 Thru Standoff	Penn Engineering	SSO-632-02
55	2	#6-32 x 0.50 in SS Phillips Panhead Screw		
56	4	#6-32 x 1.0 in SS Phillips Panhead Screw		
57	8	#8-32 x 0.375 in Stainless Flat Countersunk Screw		
58	1	0.25-20 x 0.50 High Strength Stud	Penn Engineering	HFH-0420-0.5
59	2	0.25-20 x 0.75 Clinch Stud	Penn Engineering	FHS-0420-02
60	3	0.25-20 SS Flat Washer		
61	2	0.25-20 SS Hex Nut		
62	1	J10 Cover		
63	1	J11 Cover		
64	1	PDU Chassis - Back, 0.125 ALUMINUM 5052-H34		
65	1	PDU Chassis - Base, 0.125 ALUMINUM 5052-H34		
66	1	PDU Chassis - Cover, 0.125 ALUMINUM 5052-H34		
67	1	PDU Chassis - Front, 0.125 ALUMINUM 5052-H34		
68	1	PDU Chassis - Left Side, 0.125 ALUMINUM 5052-H34		
69	1	PDU Chassis - Right Side, 0.125 ALUMINUM 5052-H34		
70	1	PDU Chassis - Mounting Plate, 0.125 ALUMINUM 5052-H34		
71	17	Self Clinching Cable Tie	Penn Engineering	HS-170-12-0

SCHEMATIC - ECHO	FEDERAL AVIATION ADMINISTRATION 800 INDEPENDENCE AVE, SW WASHINGTON, DC 20591	
	POWER DISTRIBUTION UNIT	
	T	LRR-000067-0002 A

Item	QTY	Name	Manufacturer	Part Number	Category
72	1	12 Position Terminal Block		670A GP 12	Part
73	2	Astec 1100W IMP4 Power Supply	ASTEC	IMP4-1E0-1O0-4LL0-4LL0-4NN0-00-A	Part
74	7	BGA Heatsink, 29mm, Omnidirectional	Wakefield	658-60ABT3	Part
75	7	Bridge Rectifier, 35A	Fairchild Semiconductor	GBPC3500W	Part
76	1	EMI Muffin Fan Filter	Tech-Etch	8205-5005-0413-MOD	Part
77	2	IEC Input Filter	Schaffner	FN9222R-15-06	Part
78	6	Miniature Meter	Red Lion	CUB4V020	Part
79	1	Muffin Fan	Delta	AFB1224HE	Part
80	1	Nameplate (FAA-G-2100G Section 3.3.3.1)			
81	1	RJ-45 Coupler - LCOM	L-COM	ECF504-SC3	Part
82	16	Terminal Block, 10 Pos., 0.375" Spacing	Molex	38720-0210	Part
83	2	Toggle Switch	Carling Technologies	CA201-73	Part
84	1	TVS Diode, Vbr 10V	ON Semiconductor	1N6271AG	Part
85	2	TVS Diode, Vbr 27V	ON Semiconductor	1N6281AG	Part
86	2	TVS Diode, Vbr 33V	ON Semiconductor	1N6283AG	Part
87	1	TVS Diode, Vbr 51V	ON Semiconductor	1N6288AG	Part
88	2	Banana Jack - Insulated Solder Terminal - Yellow	Johnson Components	108-0907-001	Part/Harness
89	2	Locking Ring	Carling Technologies	728-15946	
90	17	Zip Tie	Thomas & Betts	L-7-50-0-C	
91	21	Zip Tie	Thomas & Betts	L-7-50MH-II	
92	3	Terminal Block Jumper	Marathon	J600	
93	1	DB Connector, Female, 15 Socket		M24308/2-2F	

NOTE:

FOR ITEM 73, UNITS MUST BE ORDERED AND RECEIVED ACCORDING TO THIS PART #. IF INDIVIDUAL POWER MODULES ARE NOT IN THE CORRECT ORDER, THE WIRE HARNESS WILL NOT TERMINATE CORRECTLY.

POWER DISTRIBUTION UNIT

D LRR-000067-0002 A

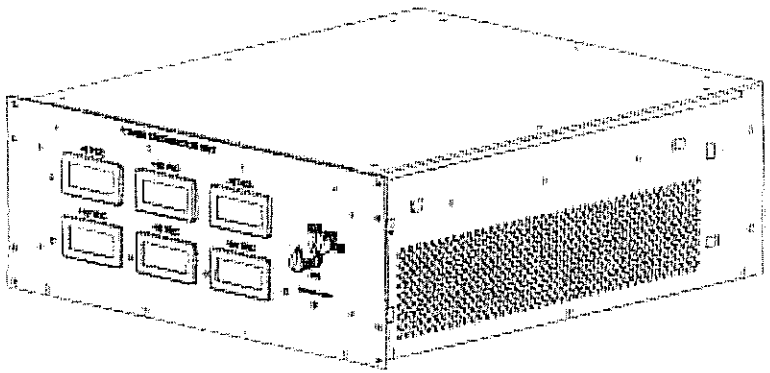

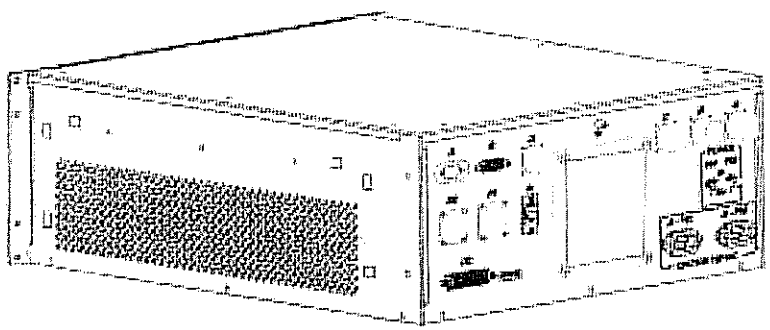

[illegible]

NOTES:
MATERIAL: [illegible] ALUMINUM.
BEND RADII: AS SHOWN, OR POSSIBLE WITHOUT CHANGING MATERIAL [illegible]
REMOVE ALL SHARP CORNERS
DEBURR ALL EDGES
[illegible]
FINISH [illegible] CHROMATE CONVERSION COATING [illegible]
IN ACCORDANCE WITH [illegible]
POWDER COAT [illegible] FRONT FACE [illegible]
[illegible]
SILK-SCREEN ACCORDING TO SHEET [illegible]
SILKSCREEN COLOR: [illegible]
[illegible] ARTWORK
FAA WILL PROVIDE ARTWORK FOR SILK-SCREEN [illegible]
THE PDU SHOWN IN THE ASSEMBLY DRAWING WILL BE INSTALLED BY THE FAA.
CONTRACTOR WILL BE RESPONSIBLE FOR PROVIDING AND INSTALLING IDENTIFICATION LABEL AS SET FORTH IN THE [illegible]
-THE LABEL WILL BE LOCATED ON THE OUTSIDE OF THE LEFT SIDE PANEL
-THE FAA WILL SPECIFY THE SERIAL NUMBER TO USE
-ALL APPROPRIATE CONTRACTOR INFORMATION IS TO BE USED

FEDERAL AVIATION ADMINISTRATION
[illegible]

BILL OF MATERIALS

[illegible]

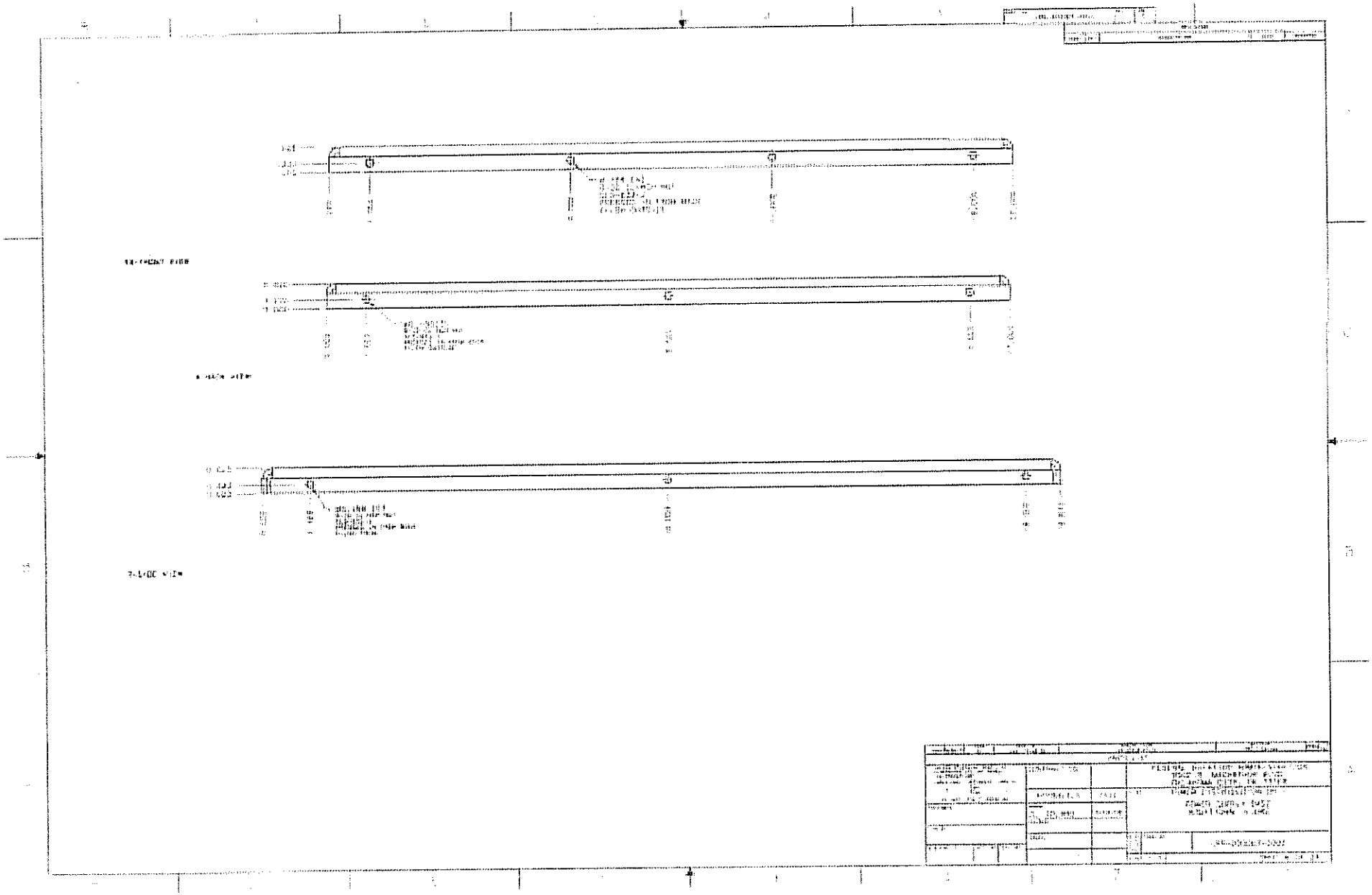

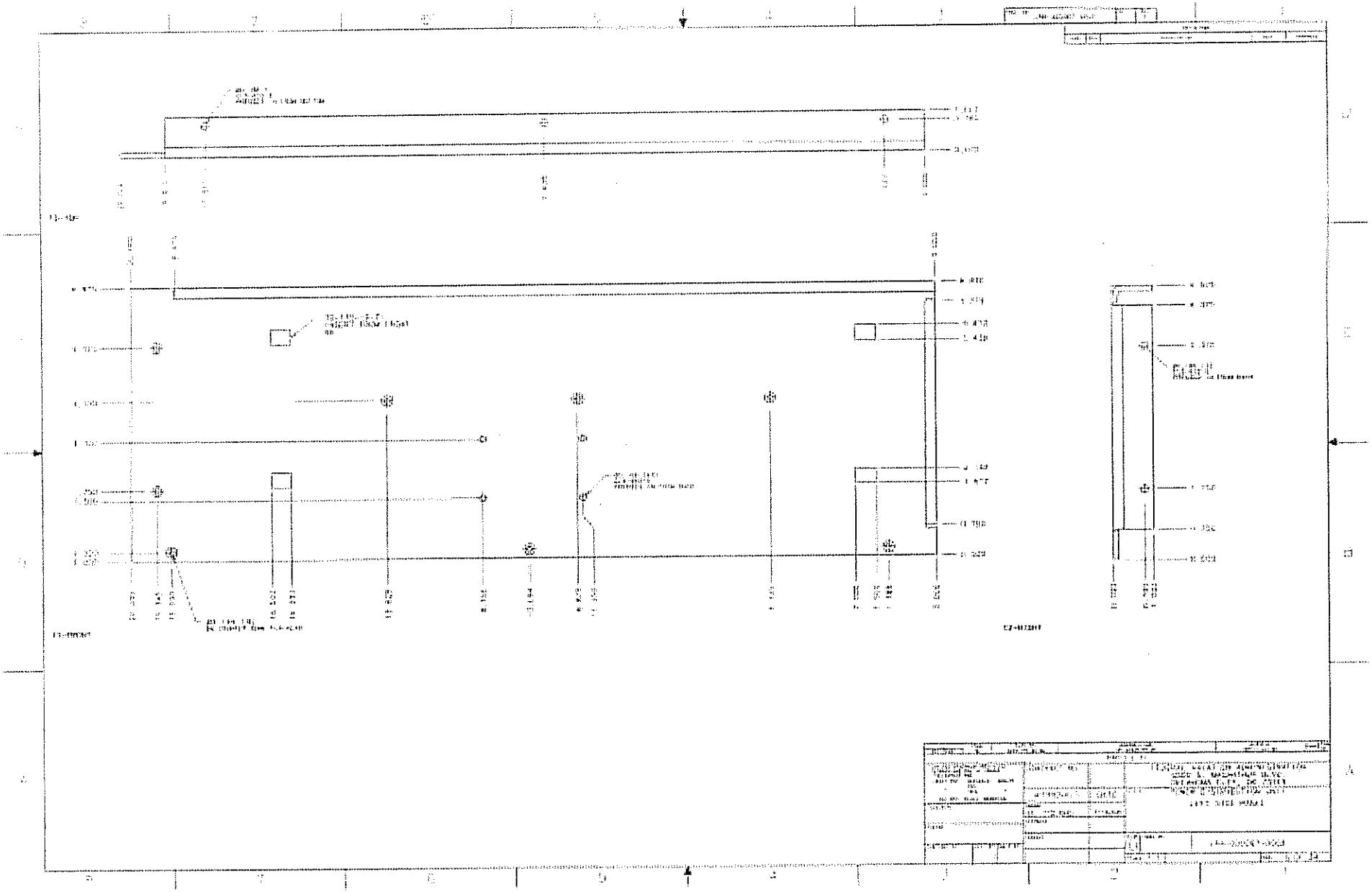

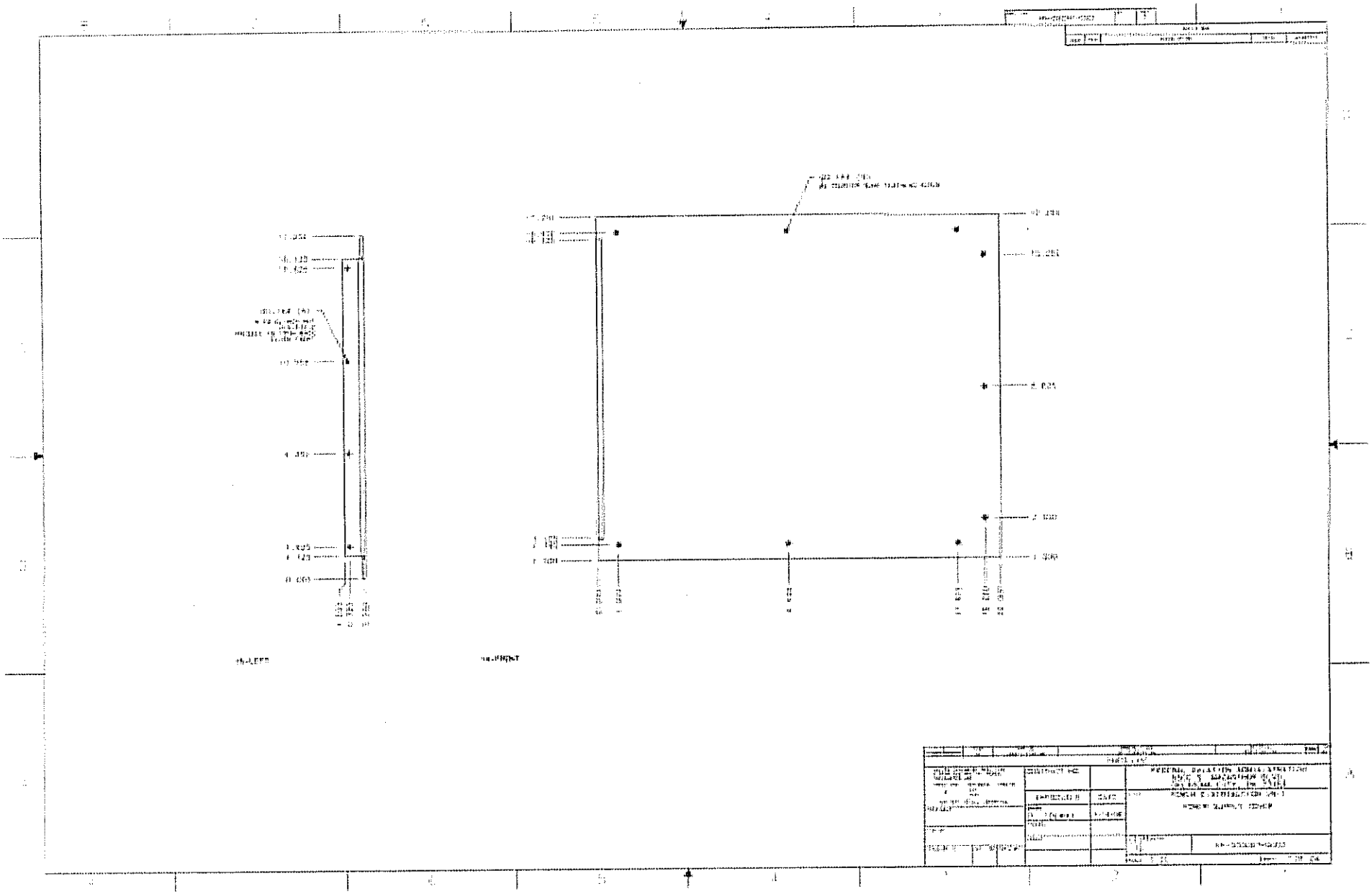

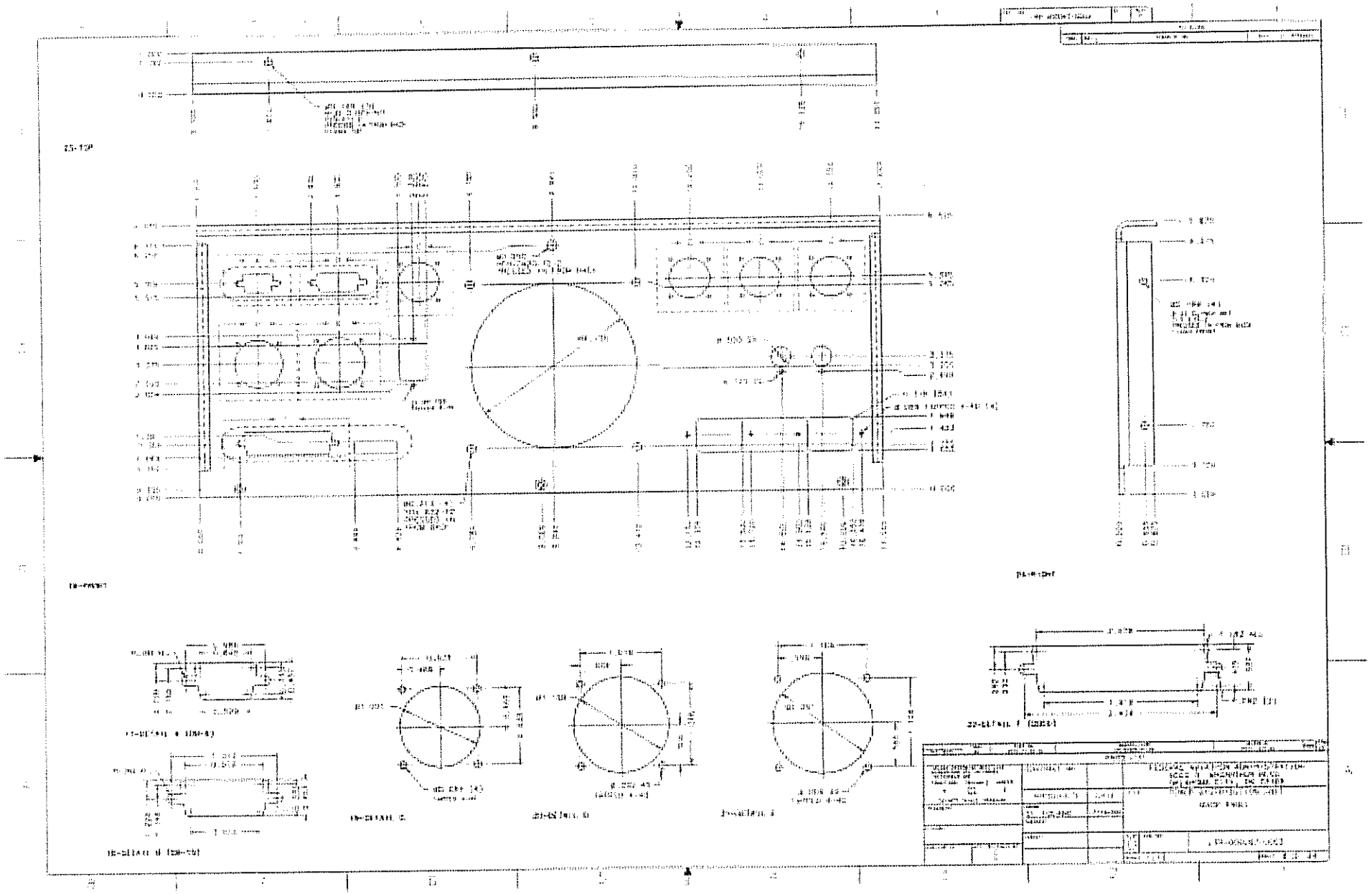

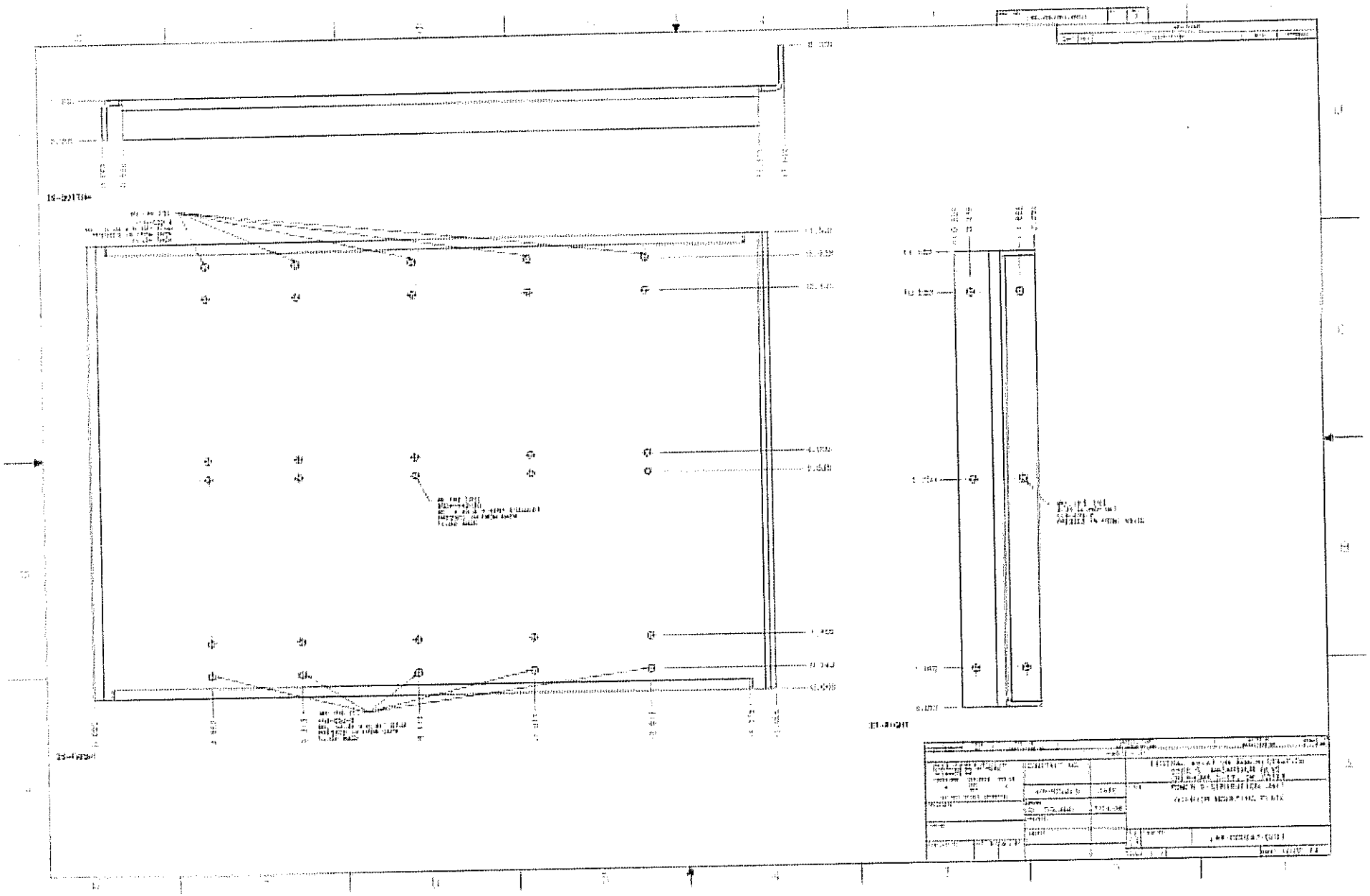

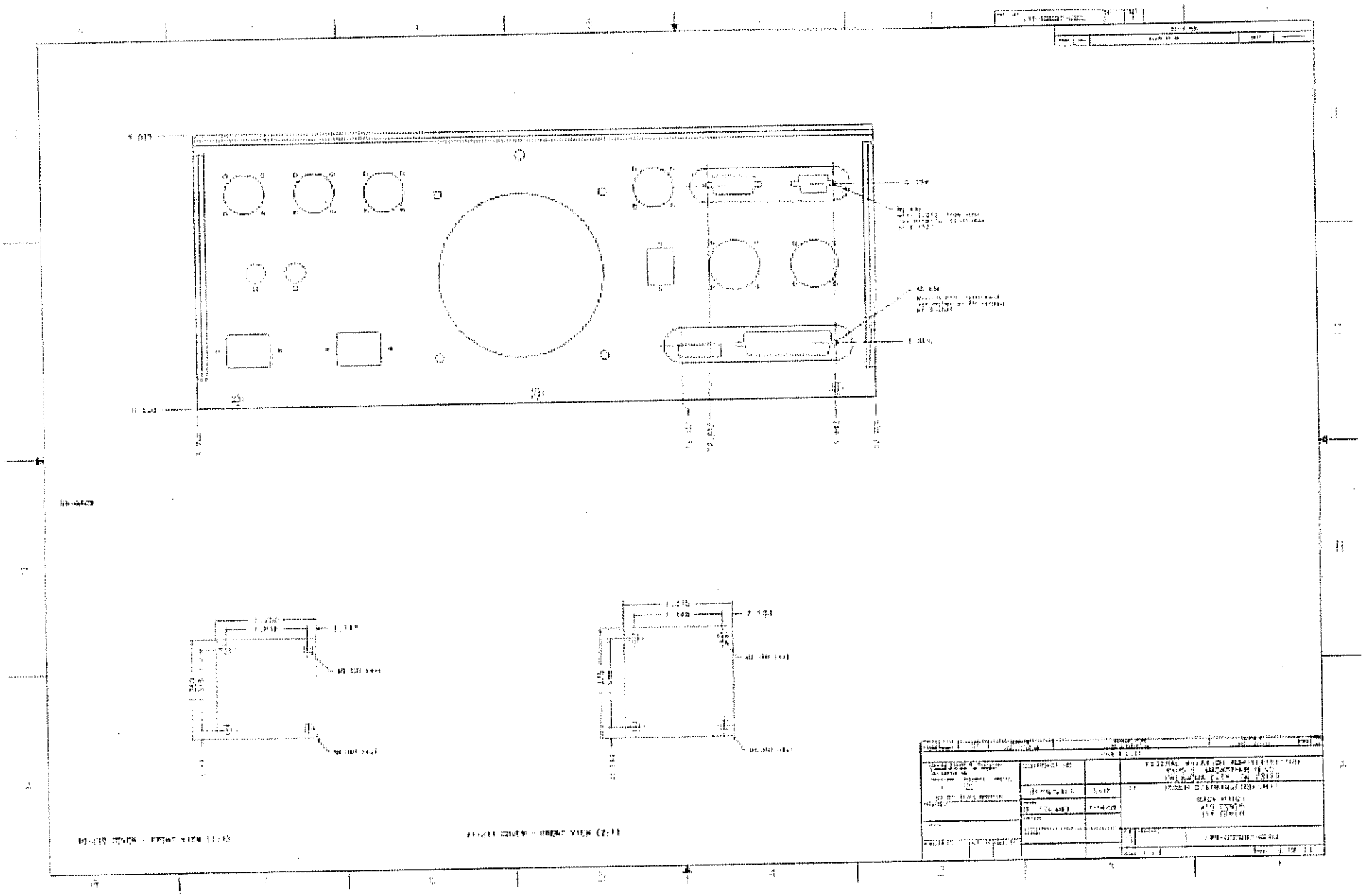

POWER DISTRIBUTION UNIT

+5 VDC

+15 VDC

-15 VDC

+12 VDC

-12 VDC

+24 VDC

SW1

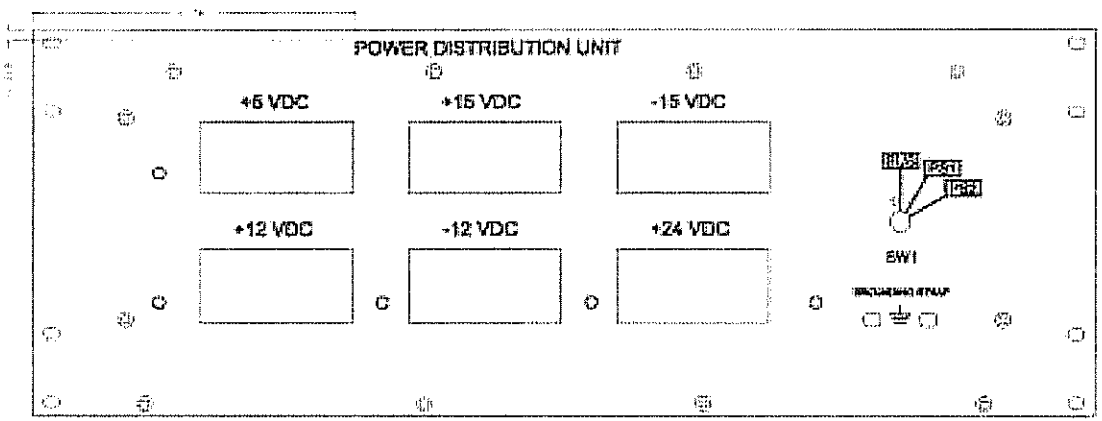

A5 A4 A3

A8 A7 A6

SW1

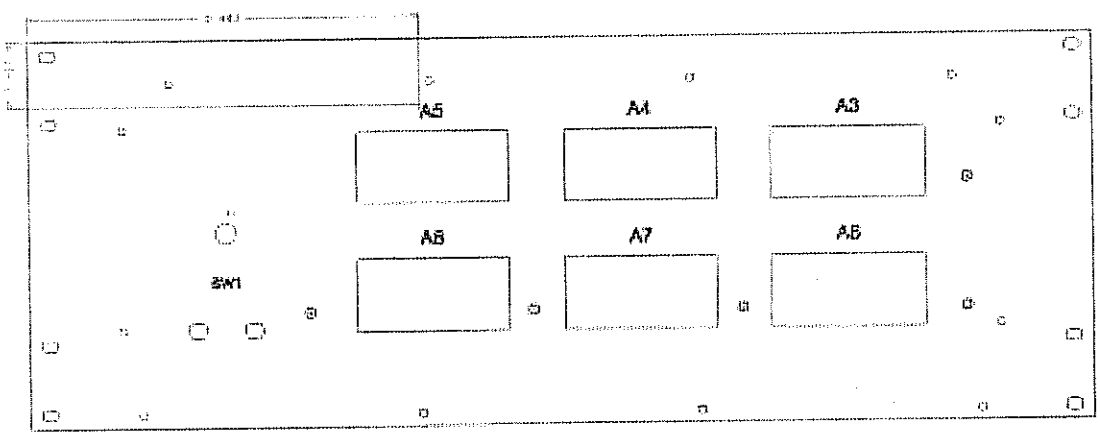

J1
J2
J3
J7
J8
J9
J10
J11
J4
J12
POWER
PS1 PS2
ON
OFF
J5 - PS1
J6 - PS2
CAUTION 120 VAC

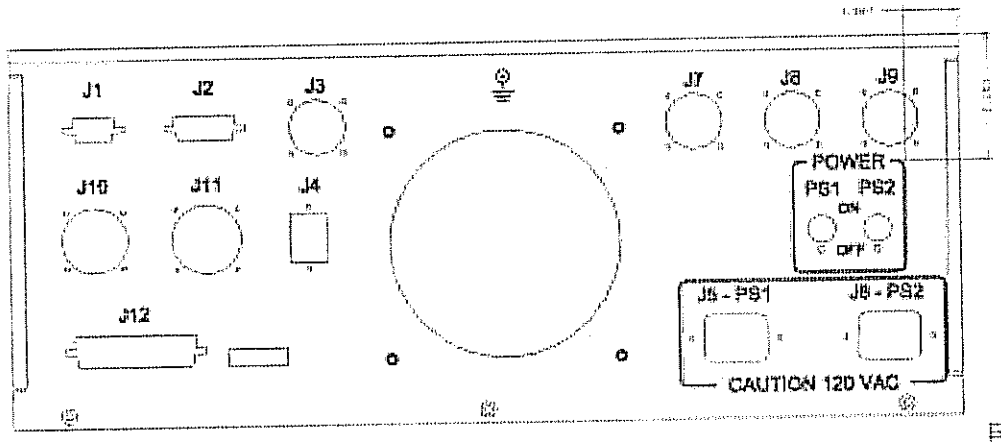
J1
J2
J3
J7
J8
J9
J10
J11
J4
J12
POWER
PS1 PS2
ON
OFF
J5 - PS1
J6 - PS2
CAUTION 120 VAC

MF1

SW3 SW2
FL2 FL1

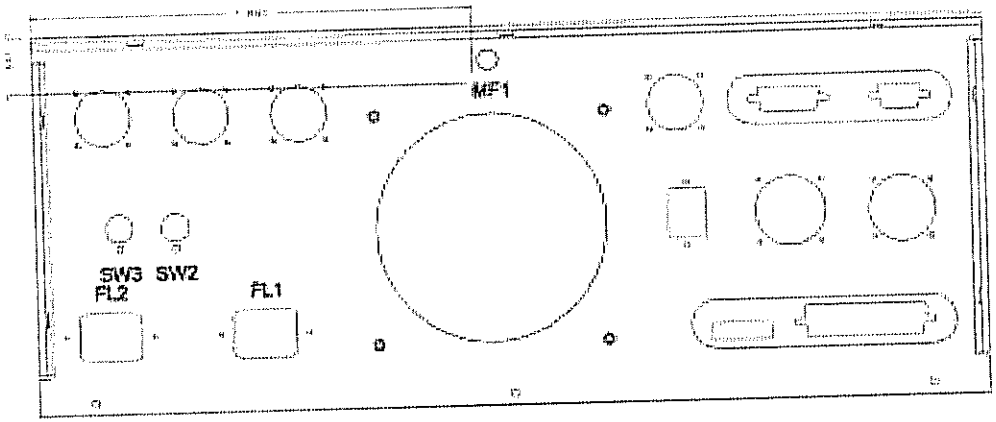

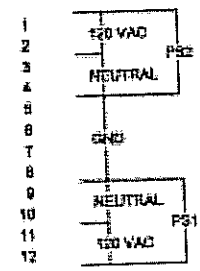

T33

PS2

A1-PSM

PS1

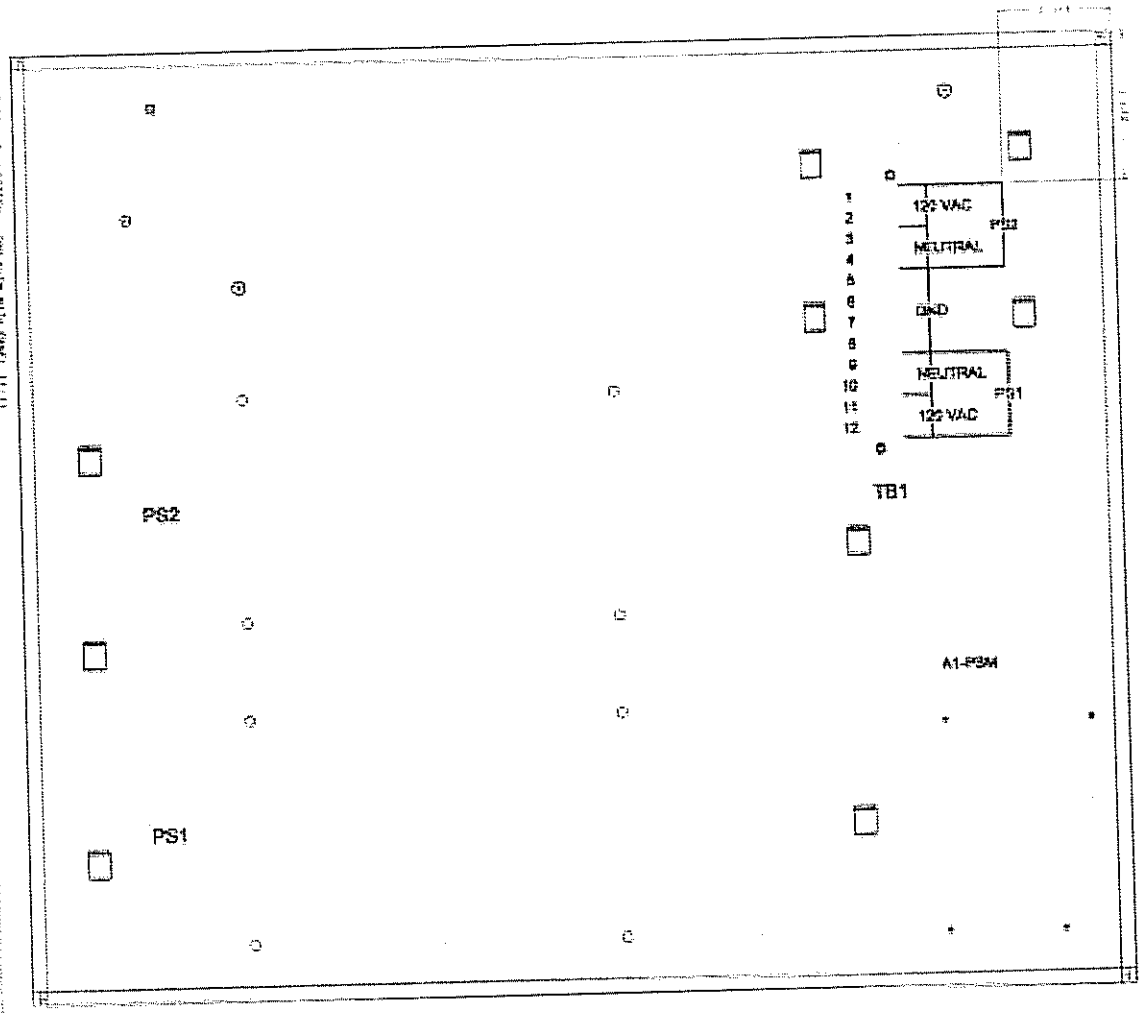
1
2
3
4
5
6
7
8
9
10
11
12
120 VAC
NEUTRAL
GND
NEUTRAL
120 VAC
TB1
PS2
PS1
A1-P3M

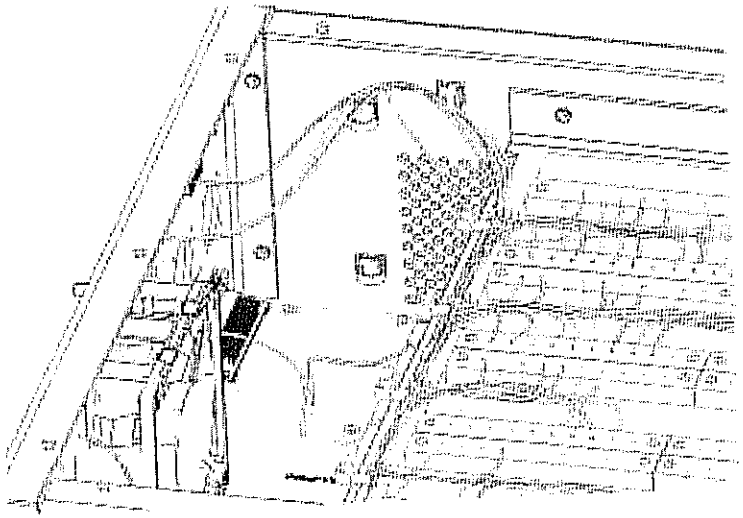

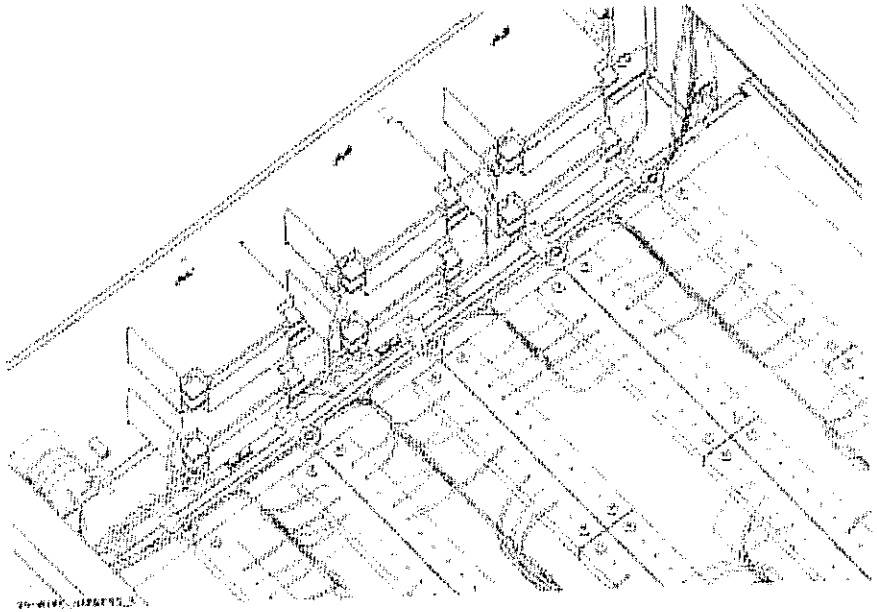

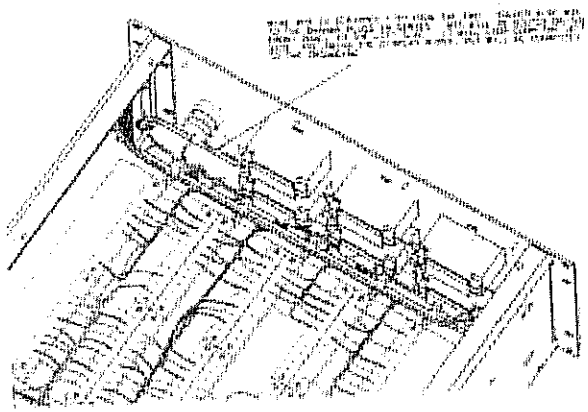

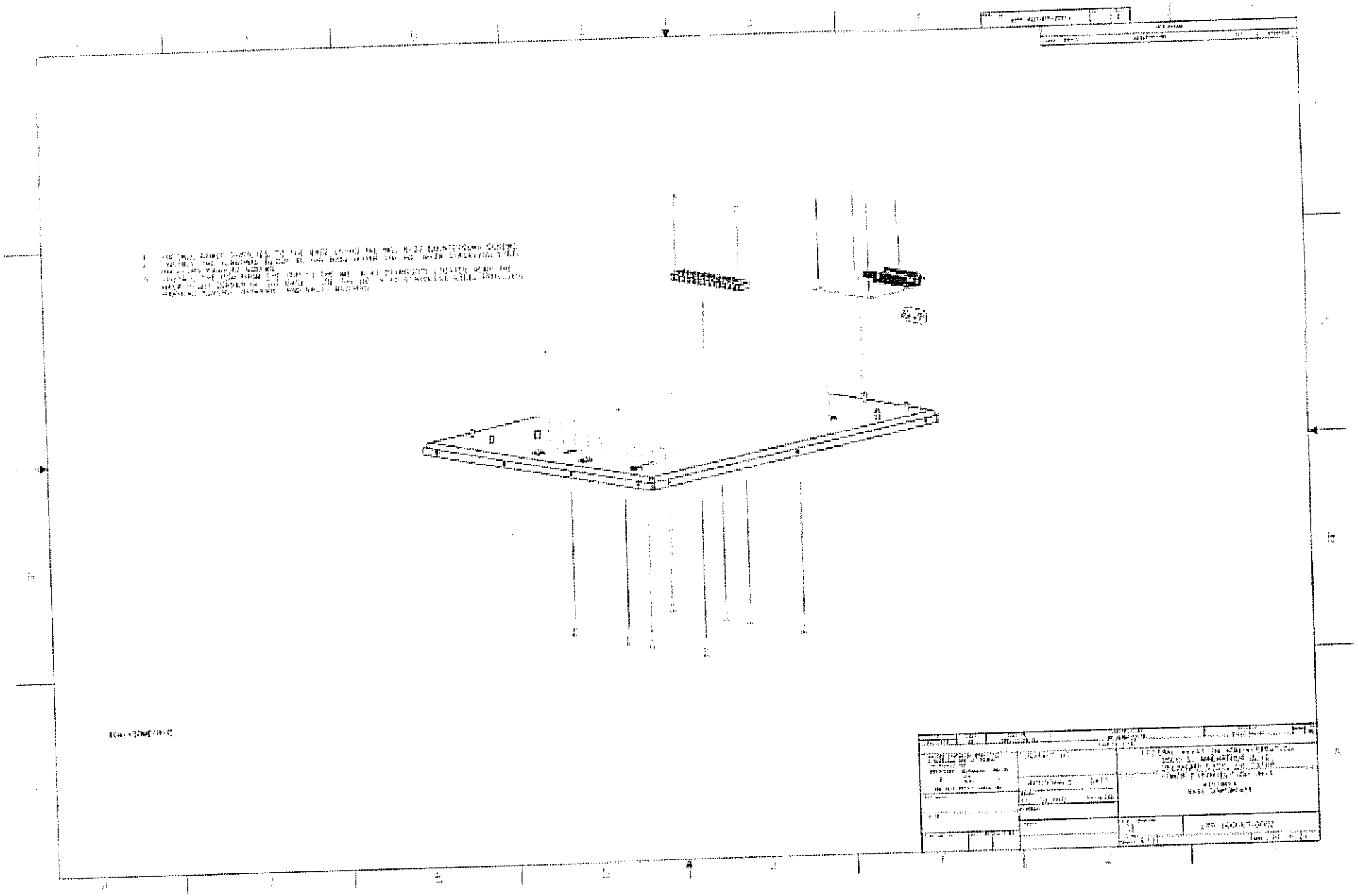

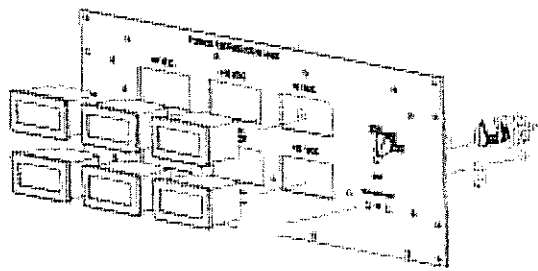

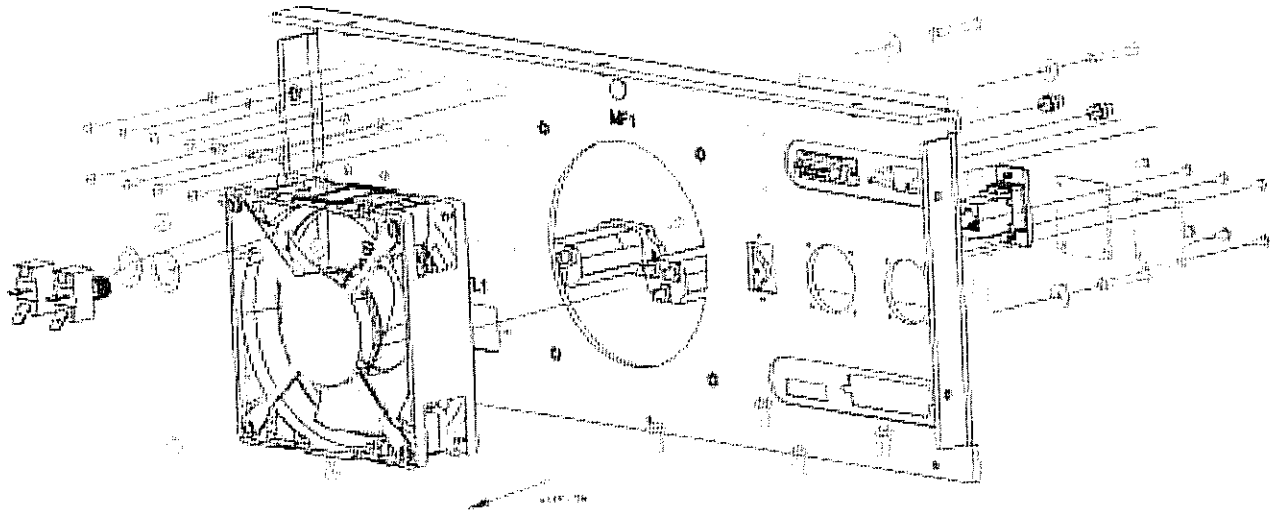
MF1
L1

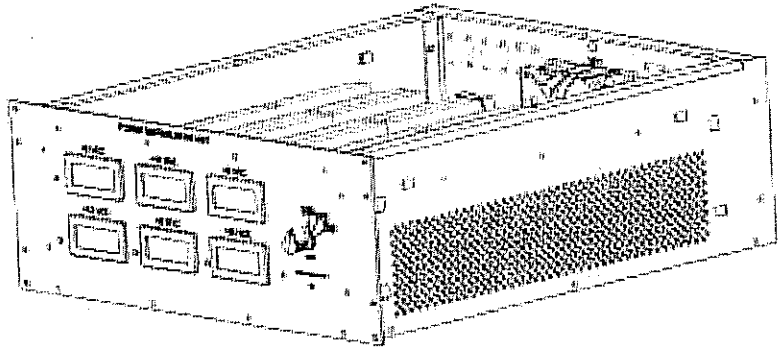

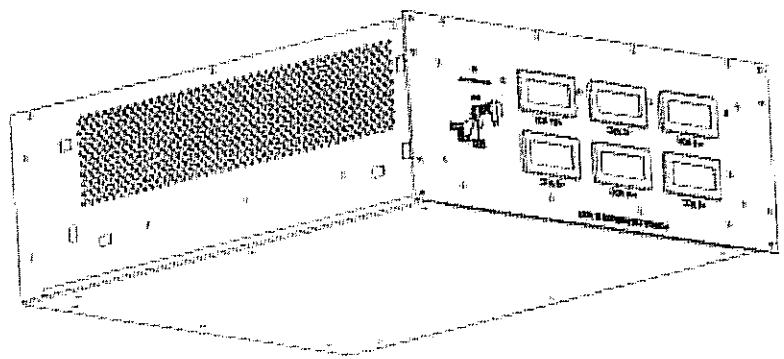

DWG. NO. LRR-001118-0201 REV.

ITEM	QTY.	NAME	MANUFACTURER	PART #	MATERIAL
1	2	[illegible] Clinch Stud	[illegible]	[illegible]	
2	1	Cover - DB-9		LRR-001118-0201	18 GAGE COLD ROLLED STEEL

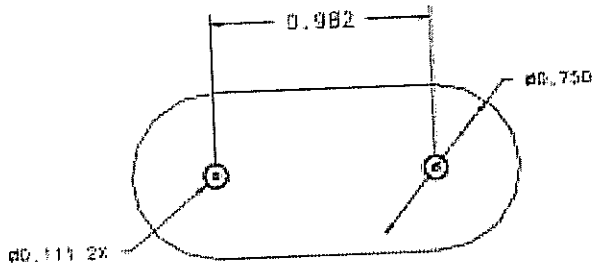

3-FRONT

NOTES:

1. 18 GAGE COLD ROLLED STEEL
2. DEBURR ALL EDGES
3. INSERT HARDWARE FROM THE FRONT
4. PLATE USING YELLOW ZINC CHROMATE CONVERSION
5. INSERT FROM BACK PANEL OF CHASSIS INTO J1
6. FASTEN WITH #4-40 HARDWARE

QTY. REQD.	ITEM NO.	PART OR IDENTIFYING NO.	NOMENCLATURE OR DESCRIPTION	MATERIAL SPECIFICATION	ITEM NO.
1			PARTS LIST		

UNLESS OTHERWISE SPECIFIED DIMENSIONS ARE IN INCHES TOLERANCES ARE:
FRACTIONS ±1/64 DECIMALS ±.01 ANGLES ±1/2°
DO NOT SCALE DRAWING

CONTRACT NO.

FEDERAL AVIATION ADMINISTRATION
6500 S. MACARTHUR BLVD
OKLAHOMA CITY, OK 73169

APPROVALS	DATE
DRAWN D. TOLANO	01/08/2002
CHECKED	
ISSUED	

TITLE COVER - DB-9

SIZE B | FSCM NO. | DWG NO. LRR-001118-0201

SCALE 2:1 | PART NO. | SHEET 1

CABLES/HARNESSES/WIRES PARTS LIST

DESCRIPTION	PART #	MANUFACTURER	TOTAL QUANTITY
Rotary Switch	44A30-02-3-03N	Grayhill	1
Knob, Dial Style,Pointer Bar Skirted	11K5028-KMNB	Grayhill	1
Cable, 7 Conductor, 24AWG, Quad Shield	9932	Belden	20'
Wire, Hook-Up, MIL-W-16878E, 22AWG, Stranded, TFE Jacket, White	5855-1	Alphawire	1651'
Wire, Hook-Up, MIL-W-16878E, 20AWG, Stranded, TFE Jacket, White	5856-1	Alphawire	1446.5'
Wire, Hook-Up, MIL-W-16878E, 14AWG, Stranded, TFE Jacket, White	5859-1	Alphawire	713.75'
Wire, Hook-Up, MIL-W-16878E, 14AWG, Stranded, TFE Jacket, Black	5859-2	Alphawire	49'
Wire, Hook-Up, MIL-W-16878E, 14AWG, Stranded, TFE Jacket, Green	5859-4	Alphawire	111.5'
Ring Terminal, Insulated, Nylon, 16AWG - 22AWG, Red, #6 Stud	RA18-8	Thomas & Betts	100
Ring Terminal, Insulated, Nylon, 14AWG - 18AWG, Blue, #4 Stud	RB14-4	Thomas & Betts	20
Ring Terminal, Insulated, Nylon, 14AWG - 18AWG, Blue, #6 Stud	RB14-6	Thomas & Betts	47
Ring Terminal, Insulated, Nylon, 14AWG - 18AWG, Blue, #10 Stud	RB14-10	Thomas & Betts	8
Ring Terminal, Insulated, Nylon, 14AWG - 18AWG, Blue, 1/4" Stud	RB14-14	Thomas & Betts	1
Quick Connect, Female, Insulated, Nylon, 14AWG - 16AWG, Blue	14RB-2577	Thomas & Betts	10
Quick Connect, Female, Insulated, Nylon, 16AWG - 22AWG, Red	16RA-2577	Thomas & Betts	2
Quick Connect, Male, Insulated, Nylon, 16AWG - 22AWG, Red	16RA-251T	Thomas & Betts	2
Contact, Electrical Connector, Socket, Crimp Removeable, 20AWG Wire	M39029/58-351		31
Contact, Electrical Connector, Pin, Crimp Removeable, 20AWG Wire	M39029/58-363		9
Contact, Electrical Connector, Socket, Crimp Removeable, 20AWG Wire	90119-2109	Molex	8
Housing, 4 Position, 0.100" Pitch	90156-0144	Molex	1
Housing, 8 Conductor Connector, 0.1" Spacing	90142-0008	Molex	2
Housing, 10 Conductor Connector, 2mm Dual Crimp	DF11-10DS-2C	Hirose	4
Crimp Terminal, 22-24AWG	DF11-22SC	Hirose	28
RJ45 Plug, VPI - CAT6 Shielded, Solid	6-PLG-SOLID-SH	VPI	2
VPI - CAT6 Cable, Solid Conductors, Twisted Pair, Shielded, Gray	CAT6-BULK-STP-SOL-GRAY	VPI	9'
RJ45 Protective Boot, Black	IT-RJ45B	CableOrganizer.com	2
Brady Labels, 125-175 Dimension, Yellow	PSPT-125-175YL	Brady	228
Brady Labels, 375-175 Dimension, Yellow	PSPT-375-175YL	Brady	4
Connector, DB15, Electric, Rectangular, Female Receptacle	M24308/2-2F		1
Contact, Electrical Connector, Socket, Crimp Removeable, 20AWG Wire	M39029/63-368		14
Connector, Circular, Electroless Nickel Finish, Female Box Mount Receptacle	D38999/20FD18SN		1
Connector, Circular, Electroless Nickel Finish, Female Box Mount Receptacle	D38999/20FD19SN		1
Connector, Circular, Electroless Nickel Finish, Female Box Mount Receptacle	D38999/20FD97SN		1

POWER DISTRIBUTION UNIT

LRR-00067-0004 A

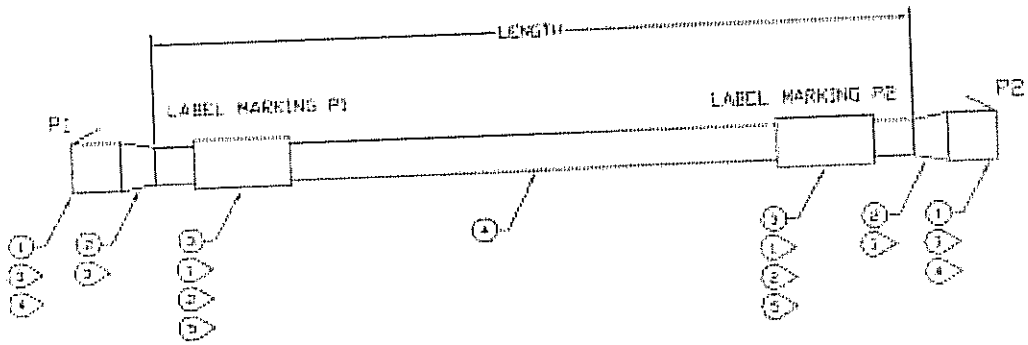

NOTES:

1. MARK IN BLUE INCH HIGH CHARACTERS
2. SHRINK TUBING PER MANUFACTURER INSTRUCTIONS
3. ASSEMBLE PER MANUFACTURER INSTRUCTIONS
4. WIRES TO BE ARRANGED FOR INSERTION INTO CONNECTOR PER TIA/EIA 5624 STANDARD
5. CABLE LABELS TO BE WITHIN 1 INCH OF APPROPRIATE CONNECTOR END

TABLE I

PART NO.	LENGTH (IN)	NO. CONDUCTORS	LABEL MARKING P1	LABEL MARKING P2
W186	7	8	W186/A1A1-J3	W186/J4

SEE TABLE 1	CAT6-BLUE-STP-50 L-GRAY	WPI - CAT6, SOLID CONDUCTORS, TWISTED PAIR, SHIELDED, GRAY	4
2	PSRT-375-175YL	BRADY - PERMANENT WIRE MARKER SLEEVE, HEATSHRINK	3
3	FR70B	BLACKBOX - RING PROTECTIVE BOOT, BLACK	2
4	6-PLG-SOLID-D1	WPI - CAT6 SHIELDED SOLID RJ45 PLUG	1
QTY.	PART NO.	DESCRIPTION	FIND NO.

TOLERANCES - UNLESS

TEXAS AVIATION ADMINISTRATION
AIRCRAFT MAINTENANCE BASE - ALTERNATE
OKLAHOMA CITY, OK 73108

POWER DISTRIBUTION UNIT

PROJECTION
FACE TO CAT6

D | 0.RR-000067-0005 | A

SCALE | SHEET 1 OF 1