GENERAL NOTES:

A. ALL CONSTRUCTION SHALL CONFORM TO CURRENT AMI-400 DIVISION 27 STANDARDS.

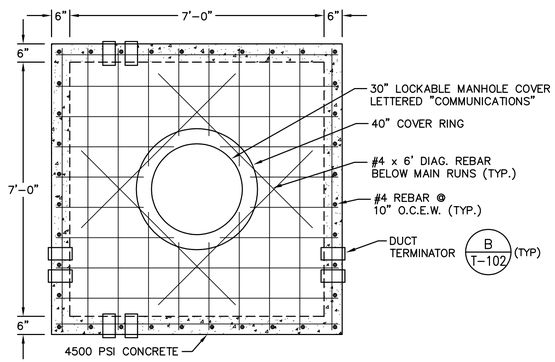

TOP PLAN

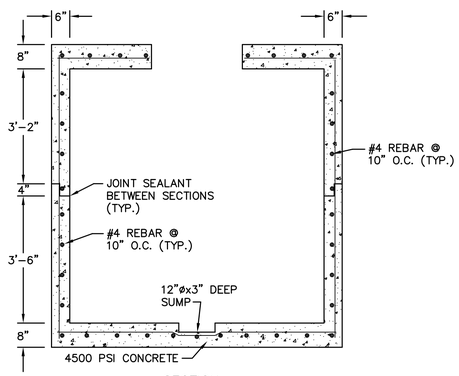

SECTION

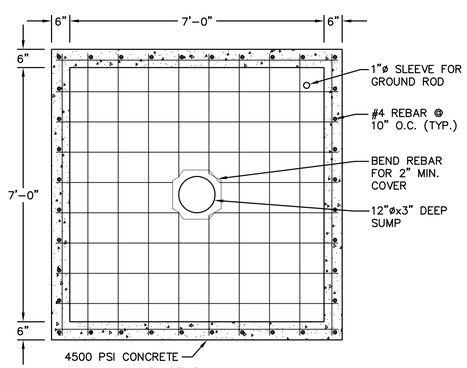

BASE PLAN

TYPICAL HV MANHOLE
7'W X 7'L X 7'H (INSIDE)

NOTES:

1. PROVIDE PULLING IRONS OPPOSITE EACH DUCT TERMINATOR. RE: "RECESSED PULLING IRON DETAIL," C/T-102.
2. PROVIDE CABLE RACKS AS SHOWN ON MH LAYOUT DETAILS. RE: "CABLE RACK DETAIL," D/T-102 AND "CABLE RACK MOUNTING DETAIL" E/T-102.

A TYPICAL MANHOLE CONSTRUCTION DETAIL
NO SCALE

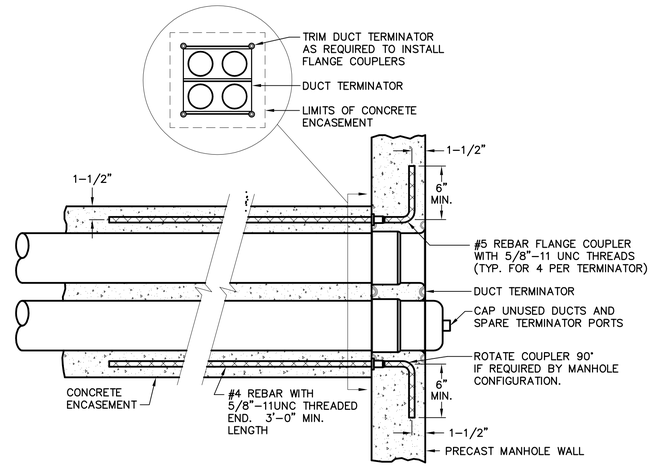

B DUCT TERMINATOR DETAIL
NO SCALE

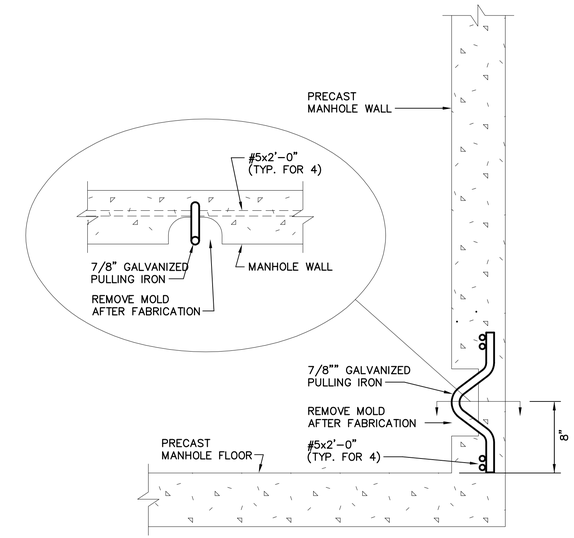

NOTE:
LOCATE PULLING IRONS OPPOSITE EACH DUCT TERMINATOR

C RECESSED PULLING IRON DETAIL
NO SCALE

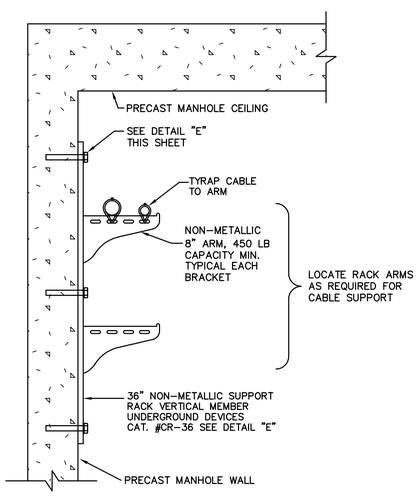

D CABLE RACK DETAIL
NO SCALE

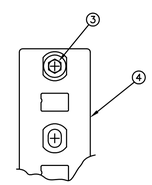

FRONT VIEW

BILL OF MATERIAL		
ITEM NUMBER	UDI CATALOG NUMBER	DESCRIPTION
1	FSRM-12	1/2"-13 DROP-IN ANCHOR MATERIAL: 303 STAINLESS STEEL
2	FFW316-18-40	FLAT WASHER ID=.562, OD=1.250, THK=.078 MATERIAL: 316 STAINLESS STEEL
3	FHC316-16-044	1/2"-13 X 1-3/8" LG. HEX HEAD CAP SCREW MATERIAL: 316 STAINLESS STEEL
4	CR36	CR36 STANCHION MATERIAL: 50% GLASS FILLED NYLON
5	RA08	RA08 ARM (8" LONG) MATERIAL: 50% GLASS FILLED NYLON
NOT SHOWN	FRT-112	SETTING TOOL (USED TO INSTALL CATALOG NO. FSRM-12 DROP-IN ANCHOR)

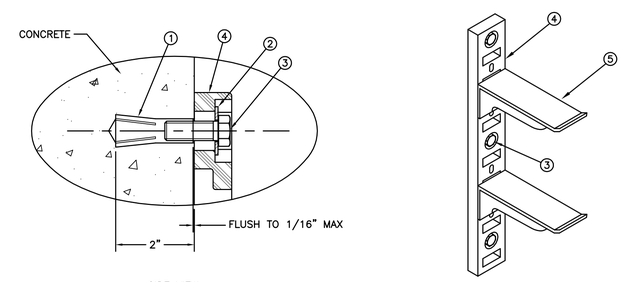

SIDE VIEW

E CABLE RACK MOUNTING DETAIL
NO SCALE

REES ASSOCIATES INC
ARCHITECTURE PLANNING INTERIORS
REES PLAZA AT EAST WHARF
9211 LAKE HEFNER PARKWAY, SUITE 300
OKLAHOMA CITY, OKLAHOMA 73120
P: 405.942.7337 F: 405.948.1261

Mechanical Engineer
050 Engineering Company
228 Robert S. Kerr Ave, Suite 515
Oklahoma City, OK 73102
P: 405.236.2030 F: 405.239.6101

Electrical Engineer
Horner Associates Engineers, Inc.
1306 Commerce Drive
Norman, OK 73071
P: 405.801.2528 F: 405.801.2529

Civil Engineer
MacArthur Associated Consultants
3033 NW 63rd St., Ste. 250E
Oklahoma City, OK 73116
P: 405.848.2471 F: 405.848.2474

Structural Engineer
Zahl-Ford, Inc.
8411 S. Walker
Oklahoma City, OK 73139
P: 405.634.3393 F: 405.634.6414

REGISTERED PROFESSIONAL ENGINEER
JULIAN DUANE HORNER
17193
05-26-11
OKLAHOMA

Horner Associates Engineers, Inc.
1306 Commerce Dr, Norman, OH 73071
Certificate of Authorization No. CA 3500, Expires 6/30/2011
info@hoaeinc.com Ph (405) 801-2528 Fax (405) 801-2529

COPYRIGHT © 2011 HORNER ASSOCIATES ENGINEERS, INC. ALL RIGHTS RESERVED

REV	DATE	DESCRIPTION	CHECK	APP'D
		100% SUBMITTAL		

DEPARTMENT OF TRANSPORTATION
FEDERAL AVIATION ADMINISTRATION
MIKE MONRONEY AERONAUTICAL CENTER – OKLAHOMA CITY, OKLAHOMA

PSL – POWER SERVICES LABORATORY

TELE/DATA DETAILS

Construction Work Request No: 09-018745

PREPARED BY	APPROVED BY
Rees Associates	Jon Berkman

DESIGNED	JDH	ISSUED BY OFFICE OF FACILITY MANAGEMENT AMP-400	DATE May 26, 2011	T-102
DRAWN	BLP		DRAWING NO. 08-008257	28 OF 31
WORK ORDER NO.	09-018745			