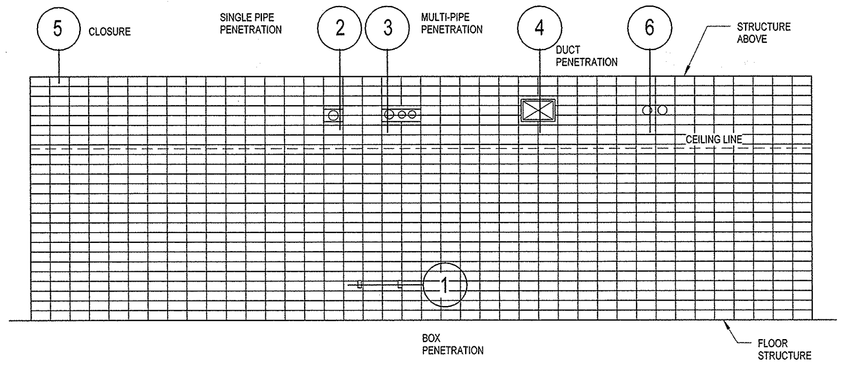

FIRE RATED CMU PARTITION DETAIL REFERENCE ELEVATION
3" = 1'-0"

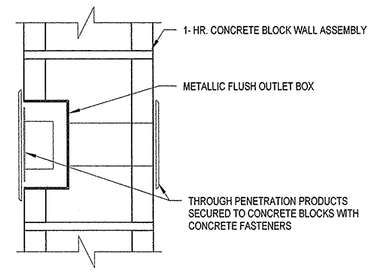

1 SHALLOW BOX PENETRATION
3" = 1'-0" UL# - WJ2034

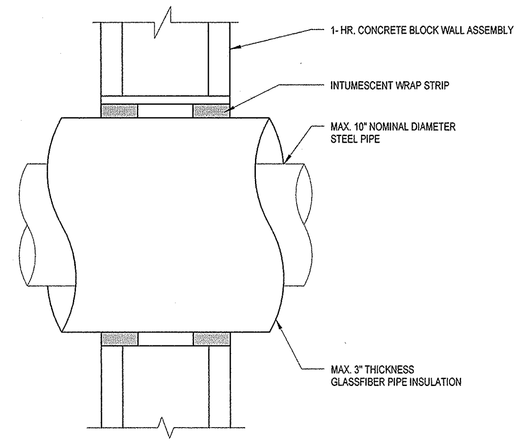

2 SINGLE PIPE PENETRATION
3" = 1'-0" UL# - WJ5051

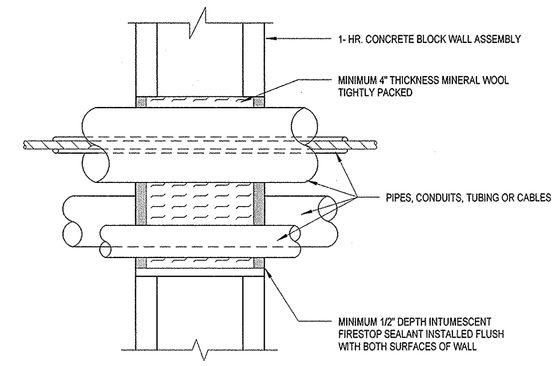

3 MULTIPLE PIPE PENETRATION
3" = 1'-0" UL# - WJ8004

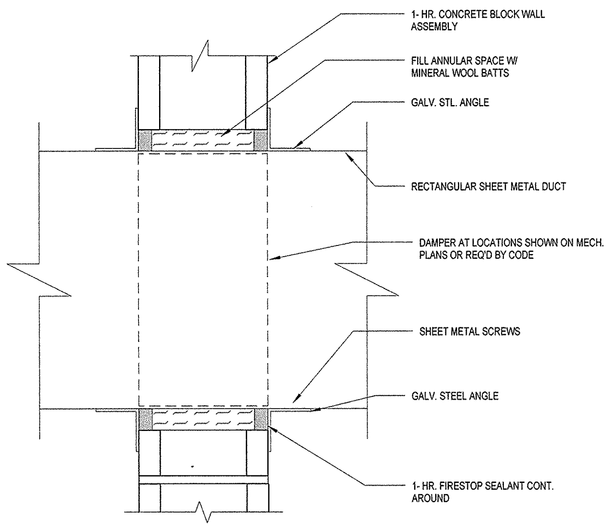

4 DUCT PENETRATION DETAIL
3" = 1'-0" UL# - WJ7021

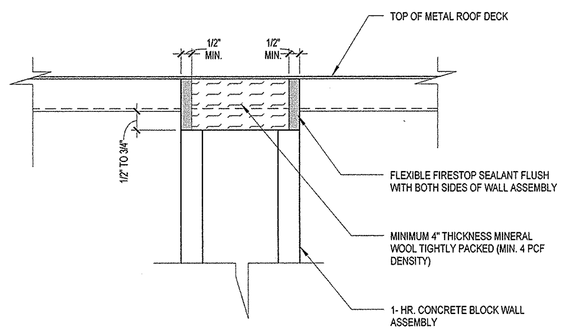

5 CLOSURE DETAIL
3" = 1'-0" UL# - HWD0081

NOTE:

1. PENETRATION DETIALS 2 THROUGH 4 ARE FOR CONDUIT, PIPE, DUCT, ETC. PENETRATIONS THROUGH FIRE RATED PARTITION AND ARE GENERIC IN NATURE.
2. CLOSURE DETAIL IS TYPICAL FOR ALL FULL - HEIGHT RATED & NON- RATED PARTITIONS (REFER PARTITION TYPES).
3. DETAILS & U.L. DESIGN NUMBERS SHOWN ARE REPRESENTATIVE OF THE MOST TYPICAL CONDITIONS ONLY AND OTHER ASSEMBLIES MAY BE REQUIRED. IT SHALL BE THE CONTRACTOR'S RESPONSIBILITY TO SELECT, SUBMIT & INSTALL U.L. DESIGNS THAT ARE APPROPRIATE FOR ANY GIVEN CONDITION TO ACHIEVE THE REQUIRED FIRE-RESISTANCE RATING.

REES ASSOCIATES INC
ARCHITECTURE PLANNING INTERIORS
REES PLAZA AT EAST WHARF
9211 LAKE HEFNER PARKWAY, SUITE 300
OKLAHOMA CITY, OKLAHOMA 73120
P: 405.942.7337 F: 405.948.1261

Mechanical Engineer
050 Engineering Company
228 Robert S. Kerr Ave, Suite 515
Oklahoma City, OK 73102
P: 405.236.2030 F: 405.239.6101
Electrical Engineer
Horner Associates Engineers, Inc.
1306 Commerce Drive
Norman, OK 73071
P: 405.801.2528 F: 405.801.2529
Civil Engineer
Grossman & Keith Engineering
10406 Greenbrier Place
Oklahoma City, OK 73159
P: 405.691.3213 F: 405.691.3214
Structural Engineer
Zahl-Ford, Inc.
8411 S. Walker
Oklahoma City, OK 73139
P: 405.634.3393 F: 405.634.6414

STATE OF OKLAHOMA
JOHN W. BERKMAN
359
OKLAHOMA CITY, OKLAHOMA
REGISTERED ARCHITECT

REV	DATE	DESCRIPTION	CHECK	APP'D
		FINAL TYPE B SUBMITTAL		

DEPARTMENT OF TRANSPORTATION
FEDERAL AVIATION ADMINISTRATION
MIKE MONRONEY AERONAUTICAL CENTER – OKLAHOMA CITY, OKLAHOMA

262 PSL POWER SERVICES LAB

PENETRATION DETAILS

Construction Work Request No: 09-018745

PREPARED BY	APPROVED BY
Rees Associates	JON BERKMAN

DESIGNED SAS	ISSUED BY OFFICE OF FACILITY MANAGEMENT AMP-400	DATE MAY 26, 2011	G-003
DRAWN COT		DRAWING NO. 09-018745	3 OF 3
WORK ORDER NO.09-018745			