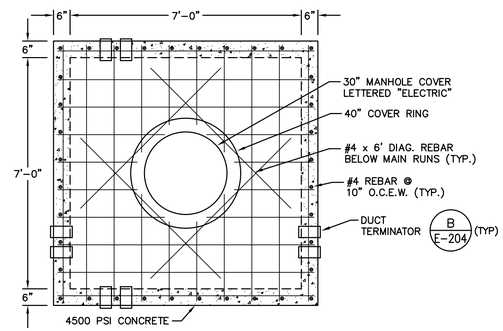

TOP PLAN

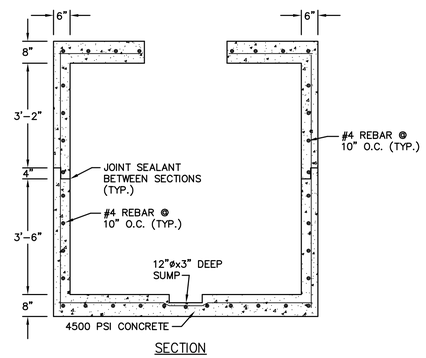

SECTION

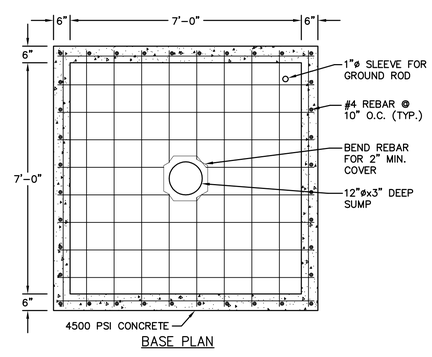

BASE PLAN

TYPICAL HV MANHOLE
7'W X 7'L X 7'H (INSIDE)

NOTES:

1. PROVIDE PULLING IRONS OPPOSITE EACH DUCT TERMINATOR. RE: "RECESSED PULLING IRON DETAIL," C/E-204.
2. PROVIDE CABLE RACKS AS SHOWN ON MH LAYOUT DETAILS. RE: "CABLE RACK DETAIL," D/E-204.

A TYPICAL MANHOLE CONSTRUCTION DETAIL
NO SCALE

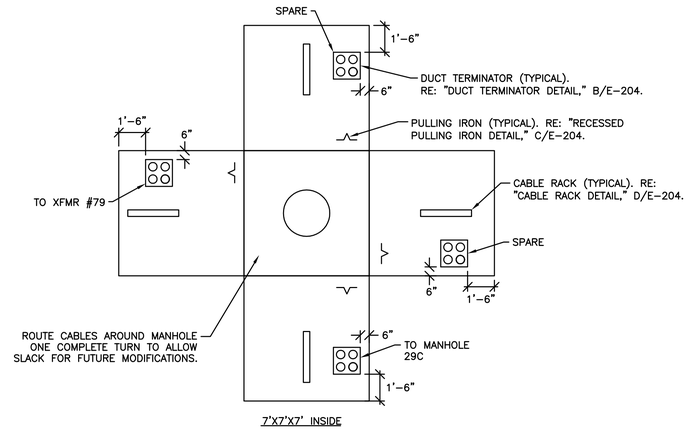

NORTH

B MANHOLE 29D LAYOUT DETAIL
NO SCALE

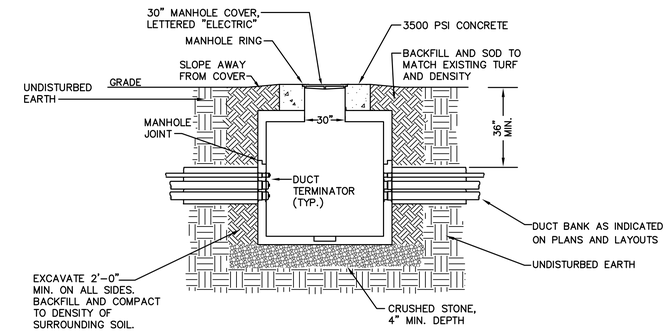

C TYPICAL MANHOLE INSTALLATION DETAIL
NO SCALE

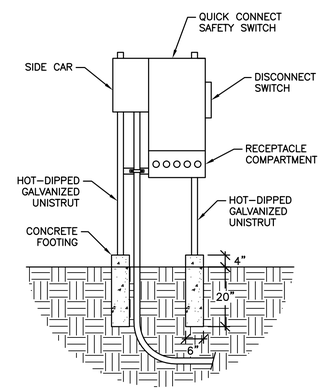

D 200A QUICK CONNECT SAFETY SWITCH DETAIL
NOT TO SCALE

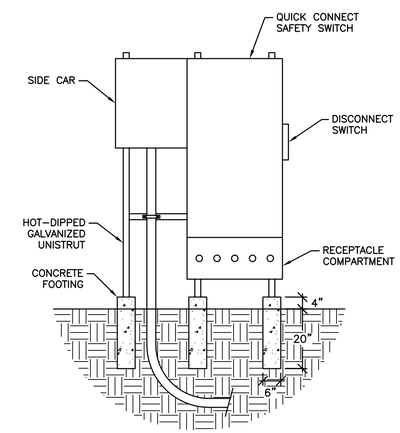

E 400A QUICK CONNECT SAFETY SWITCH DETAIL
NOT TO SCALE

REES ASSOCIATES INC
ARCHITECTURE PLANNING INTERIORS
REES PLAZA AT EAST WHARF
9211 LAKE HEFNER PARKWAY, SUITE 300
OKLAHOMA CITY, OKLAHOMA 73120
P: 405.942.7337 F: 405.948.1261

Mechanical Engineer
050 Engineering Company
228 Robert S. Kerr Ave, Suite 515
Oklahoma City, OK 73102
P: 405.236.2030 F: 405.239.6101

Electrical Engineer
Horner Associates Engineers, Inc.
1306 Commerce Drive
Norman, OK 73071
P: 405.801.2528 F: 405.801.2529

Civil Engineer
MacArthur Associated Consultants
3033 NW 63rd St., Ste. 250E
Oklahoma City, OK 73116
P: 405.848.2471 F: 405.848.2474

Structural Engineer
Zahl-Ford, Inc.
8411 S. Walker
Oklahoma City, OK 73139
P: 405.634.3393 F: 405.634.6414

REGISTERED PROFESSIONAL ENGINEER
JULIAN DUANE HORNER
17193
05-26-11
OKLAHOMA

Horner Associates Engineers, Inc.
1306 Commerce Dr, Norman, OK 73071
Certificate of Authorization No. CA 3520, Expires 6/30/2011
info@haeinc.com Ph: (405) 801-2528 Fax: (405) 801-2529

COPYRIGHT © 2011 HORNER ASSOCIATES ENGINEERS, INC. ALL RIGHTS RESERVED

REV.	DATE	DESCRIPTION	CHECK	APP'D
		100% SUBMITTAL		

DEPARTMENT OF TRANSPORTATION
FEDERAL AVIATION ADMINISTRATION
MIKE MONRONEY AERONAUTICAL CENTER – OKLAHOMA CITY, OKLAHOMA

PSL – POWER SERVICES LABORATORY

POWER MANHOLE DETAILS

Construction Work Request No: 09-018745

PREPARED BY: Rees Associates		APPROVED BY: Jon Berkman	
DESIGNED: JDH	ISSUED BY OFFICE OF: FACILITY MANAGEMENT AMP-400	DATE: May 26, 2011	E-205
DRAWN: BLP		DRAWING NO. 08-008257	10 OF 31
WORK ORDER NO. 09-018745			