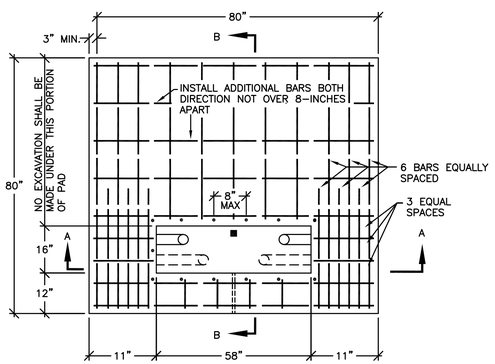

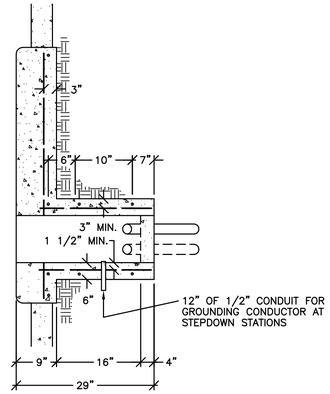

SECTION B–B

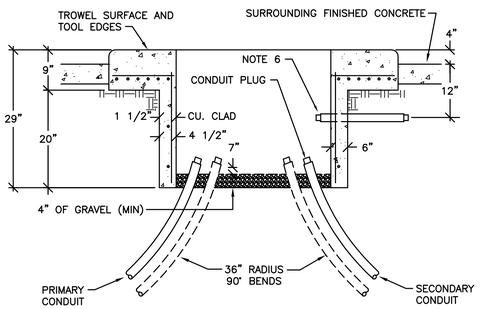

SECTION A–A

TRANSFORMER PAD DETAIL NOTES:

1. CONCRETE SHALL BE 3000 PSI, 3/4 AGGREGATE WITH JUST ENOUGH WATER TO MAKE A WORKABLE MIX
2. ALL REINFORCING STEEL SHALL BE NO. 6 ROUND DEFORMED BARS.
3. CONTACT FAACOR TO INSPECT FORMS AND CONDUIT INSTALLATIONS PRIOR TO POURING CONCRETE.
4. IF PAD IS NOT POURED ON UNDISTURBED EARTH, PIERS AND FOOTINGS SHALL BE PROVIDED.
5. MINIMUM CONCRETE COVER OVER REINFORCING STEEL SHALL BE 3 IN. WHEN AGAINST THE EARTH AND 1/2 IN. WHEN FORMED
6. INSTALL 2 IN. PVC CONDUIT PLUGGED AT BOTH ENDS FOR TEMPORARY SERVICE.
7. PAD AND OPENING SIZES SHALL BE ADJUSTED BASED ON THE ACTUAL DIMENSIONS OF THE TRANSFORMER PROVIDED.

A TRANSFORMER PAD DETAIL
NO SCALE

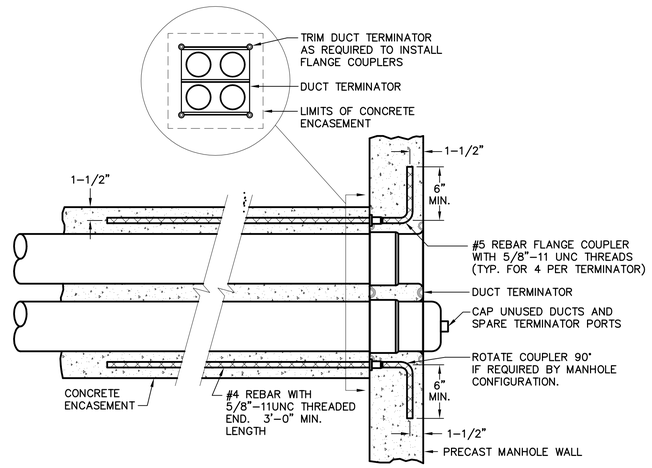

B DUCT TERMINATOR DETAIL
NO SCALE

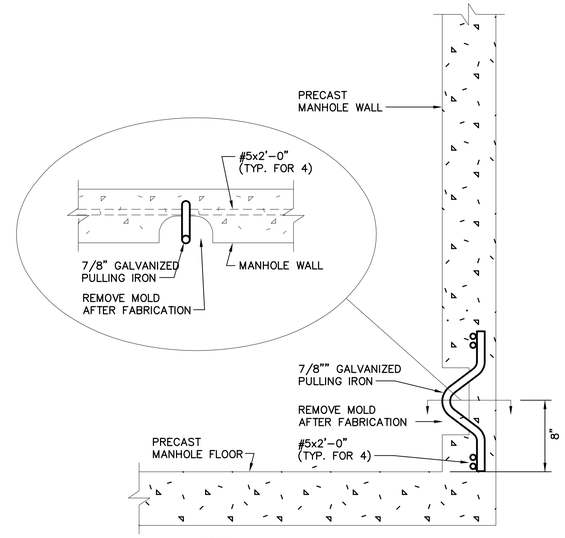

NOTE:

LOCATE PULLING IRONS OPPOSITE EACH DUCT TERMINATOR

C RECESSED PULLING IRON DETAIL
NO SCALE

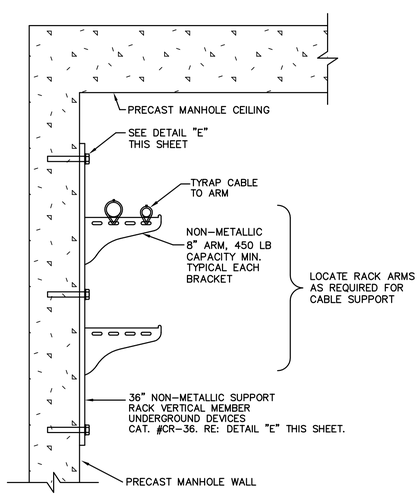

D CABLE RACK DETAIL
NO SCALE

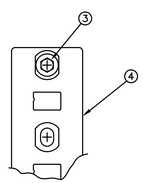

FRONT VIEW

BILL OF MATERIAL		
ITEM NUMBER	UDI CATALOG NUMBER	DESCRIPTION
1	FSRM-12	1/2"-13 DROP-IN ANCHOR MATERIAL: 303 STAINLESS STEEL
2	FFW316-18-40	FLAT WASHER ID=.562, OD=1.250, THK=.078 MATERIAL: 316 STAINLESS STEEL
3	FHC316-16-044	1/2"-13 X 1-3/8" LG. HEX HEAD CAP SCREW MATERIAL: 316 STAINLESS STEEL
4	CR36	CR36 STANCHION MATERIAL: 50% GLASS FILLED NYLON
5	RA08	RA08 ARM (8" LONG) MATERIAL: 50% GLASS FILLED NYLON
NOT SHOWN	FRT-112	SETTING TOOL (USED TO INSTALL CATALOG NO. FSRM-12 DROP-IN ANCHOR)

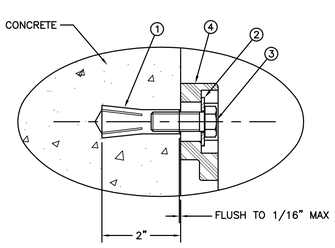

SIDE VIEW

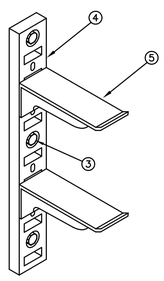

E CABLE RACK MOUNTING DETAIL
NO SCALE

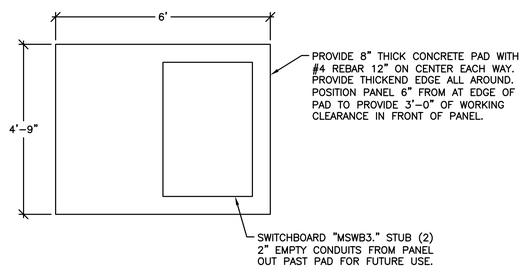

1 SWITCHBOARD "MSWB3" ENLARGED PLAN
NO SCALE

REES ASSOCIATES INC
ARCHITECTURE PLANNING INTERIORS
REES PLAZA AT EAST WHARF
9211 LAKE HEFNER PARKWAY, SUITE 300
OKLAHOMA CITY, OKLAHOMA 73120
P: 405.942.7337 F: 405.948.1261

Mechanical Engineer
050 Engineerlng Company
228 Robert S. Kerr Ave, Suite 515
Oklahoma City, OK 73102
P: 405.236.2030 F: 405.239.6101

Electrical Engineer
Horner Associates Engineers, Inc.
1306 Commerce Drive
Norman, OK 73071
P: 405.801.2528 F: 405.801.2529

Civil Engineer
MacArthur Associated Consultants
3033 NW 63rd St., Ste. 250E
Oklahoma City, OK 73116
P: 405.848.2471 F: 405.848.2474

Structural Engineer
Zahl-Ford, inc.
8411 S. Walker
Oklahoma City, OK 73139
P: 405.634.3393 F: 405.634.6414

REV	DATE	DESCRIPTION	CHECK	APP'D
		100% SUBMITTAL		

REGISTERED PROFESSIONAL ENGINEER
JULIAN DUANE HORNER
17193
05-26-11
OKLAHOMA

Horner Associates Engineers, Inc.
1306 Commerce Dr, Norman, OH 73071
Certificate of Authorization No. CA 3580, Expires 6/30/2011
info@haeinc.com Ph (405) 801-2528 Fax (405) 801-2529

COPYRIGHT © 2011 HORNER ASSOCIATES ENGINEERS, INC. ALL RIGHTS RESERVED

DEPARTMENT OF TRANSPORTATION
FEDERAL AVIATION ADMINISTRATION
MIKE MONRONEY AERONAUTICAL CENTER – OKLAHOMA CITY, OKLAHOMA

PSL – POWER SERVICES LABORATORY

SITE PLAN DETAILS

Construction Work Request No: 09-018745

PREPARED BY: Rees Associates		APPROVED BY: Jon Berkman	
DESIGNED: JDH	ISSUED BY OFFICE OF FACILITY MANAGEMENT AMP-400	DATE: May 26, 2011	E-204
DRAWN: BLP		DRAWING NO. 08-008257	9 OF 31
WORK ORDER NO. 09-018745			