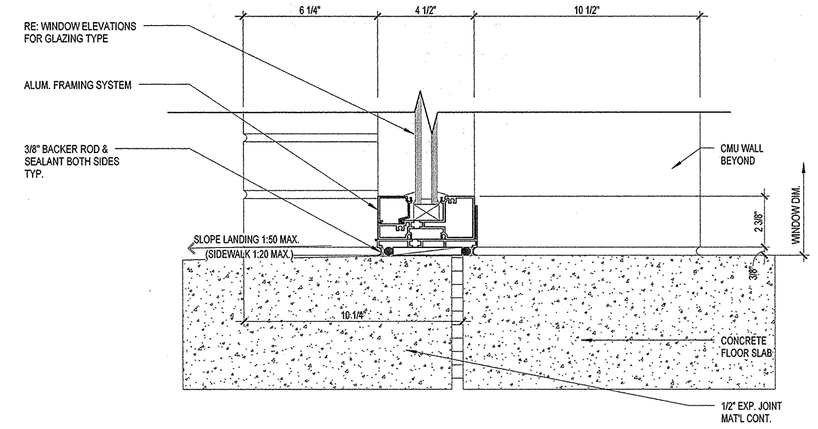

405 **SILL DETAIL**
3" = 1'-0"

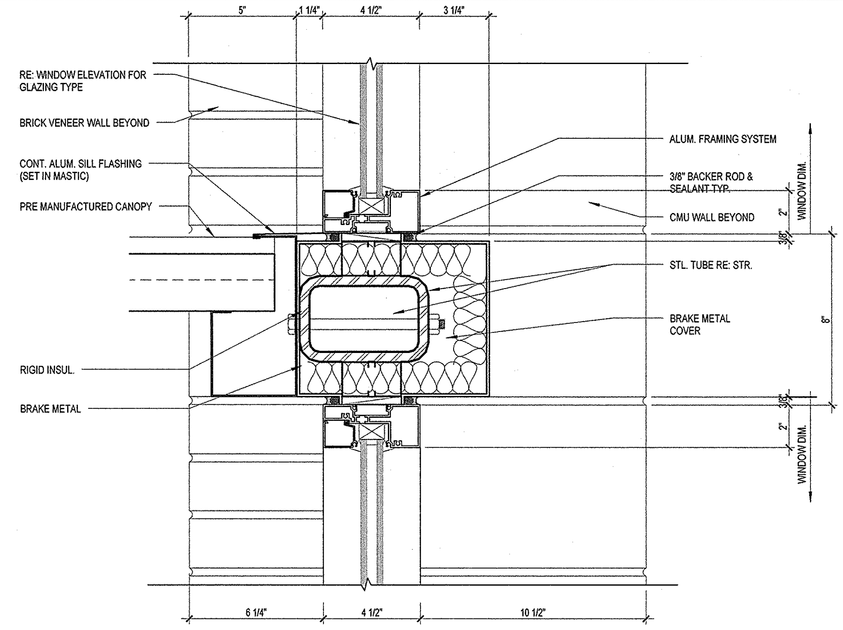

406 **SILL DETAIL**
3" = 1'-0"

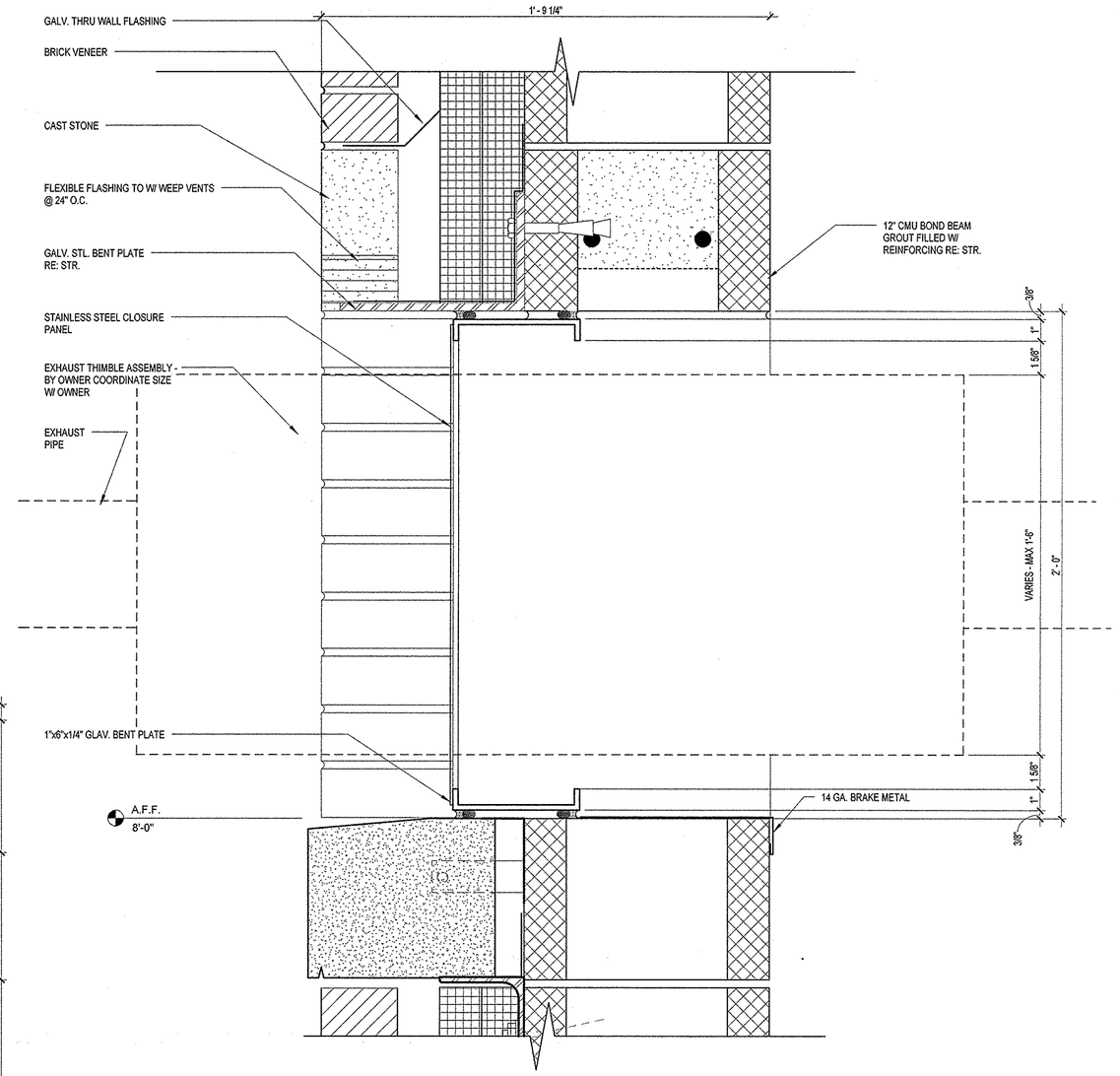

407 **EXHAUST THIMBLE DETAIL**
3" = 1'-0"

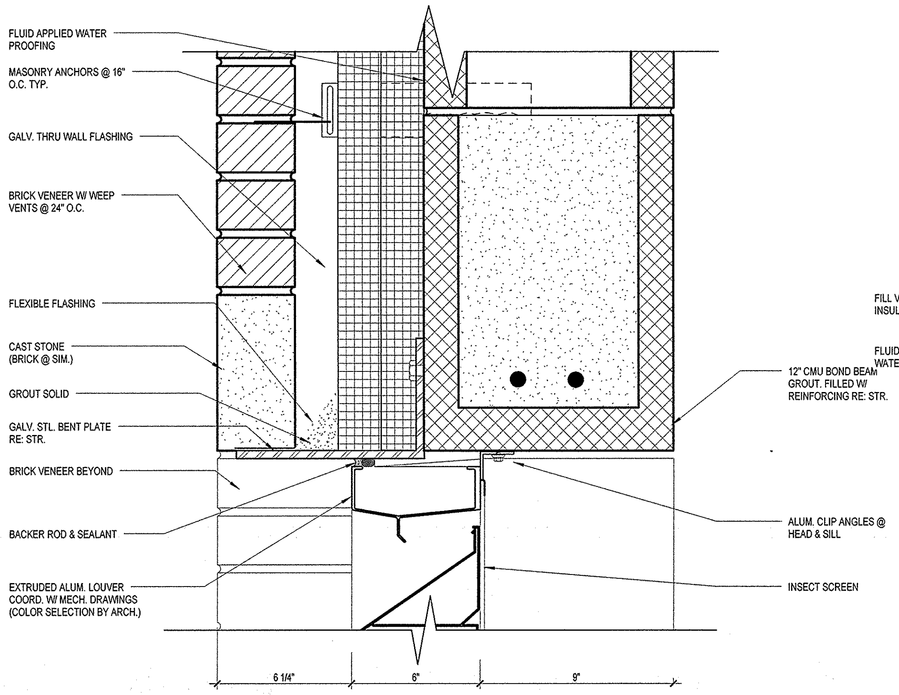

L401 **HEAD DETAIL**
3" = 1'-0"

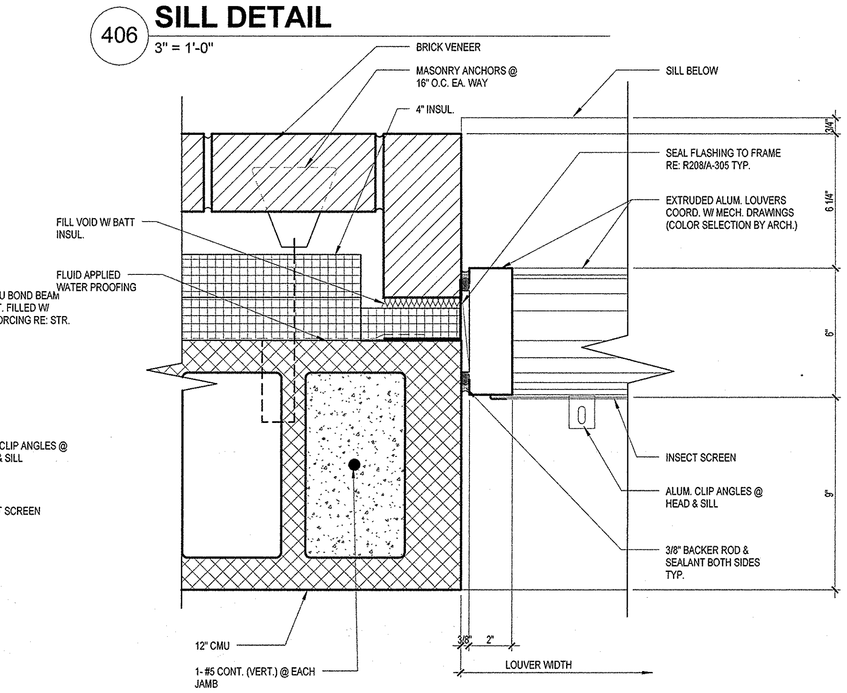

L402 **JAMB DETAIL**
3" = 1'-0"

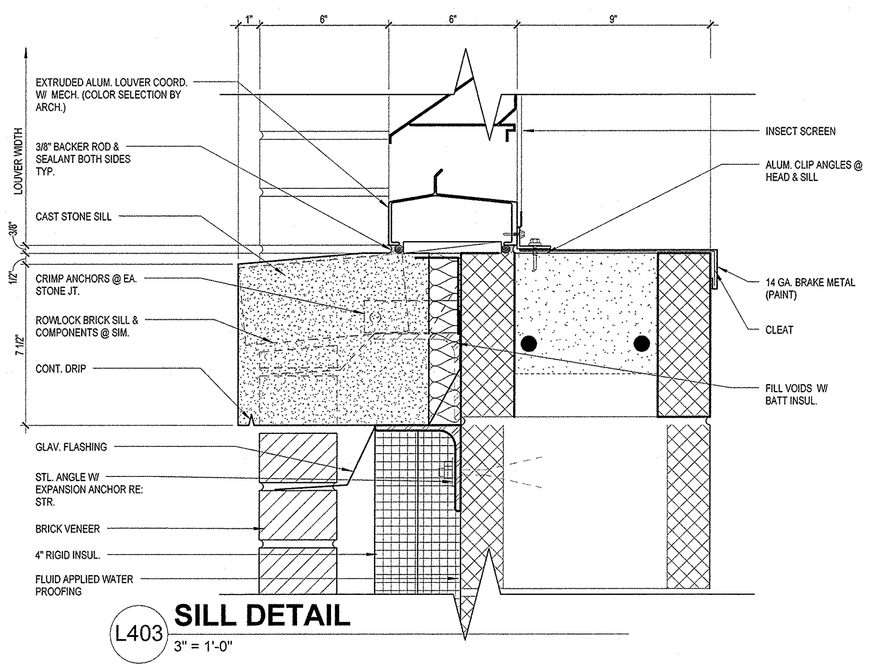

L403 **SILL DETAIL**
3" = 1'-0"

L404 **NOT USED**

L405 **NOT USED**

REES ASSOCIATES INC
ARCHITECTURE PLANNING INTERIORS
REES PLAZA AT EAST WHARF
9211 LAKE HEFNER PARKWAY, SUITE 300
OKLAHOMA CITY, OKLAHOMA 73120
P: 405.942.7337 F: 405.948.1261

Mechanical Engineer
050 Engineering Company
228 Robert S. Kerr Ave, Suite 515
Oklahoma City, OK 73102
P: 405.236.2030 F: 405.239.6101
Electrical Engineer
Horner Associates Engineers, Inc.
1306 Commerce Drive
Norman, OK 73071
P: 405.801.2528 F: 405.801.2529
Civil Engineer
Grossman & Keith Engineering
10408 Greenbriar Place
Oklahoma City, OK 73159
P: 405.691.3213 F: 405.691.3214
Structural Engineer
Zahl-Ford, Inc.
8411 S. Walker
Oklahoma City, OK 73139
P: 405.634.3393 F: 405.634.6414

STATE OF OKLAHOMA JOHN N. TUCKER 3603 REGISTERED ARCHITECT

REV	DATE	DESCRIPTION	CHECK	APP'D
		FINAL TYPE B SUBMITTAL		

DEPARTMENT OF TRANSPORTATION
FEDERAL AVIATION ADMINISTRATION
MIKE MONRONEY AERONAUTICAL CENTER – OKLAHOMA CITY, OKLAHOMA

262 PSL POWER SERVICES LAB
EXTERIOR WINDOW & LOUVER
DETAILS 405-407 & L401-L405
Construction Work Request No: 09-018745

PREPARED BY: Rees Associates		APPROVED BY: JON BERKMAN	
DESIGNED SAS	ISSUED BY OFFICE OF FACILITY MANAGEMENT AMP-400	DATE May 26, 2011	A-502
DRAWN COT		DRAWING NO. 09-018745	13 OF 20
WORK ORDER NO.09-018745			