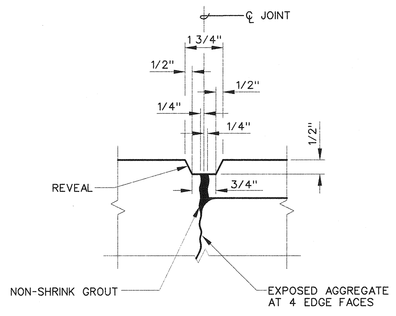

15 S5.1 | S5.1 VERTICAL JOINT AND REVEAL DETAIL
SCALE: NOT TO SCALE

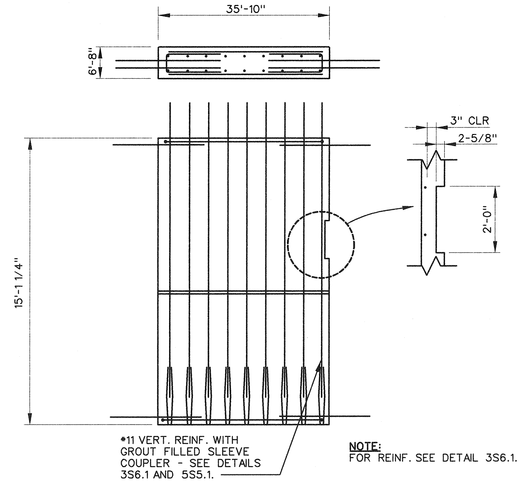

11 S5.1 | S5.1 STR P.C. MODULE B4
SCALE: 1/4" = 1'-0"

REINFORCEMENT EMBEDMENT LENGTH INTO SPLICE SLEEVE	
REINF.	A
*11	9.45" ± 0.47"

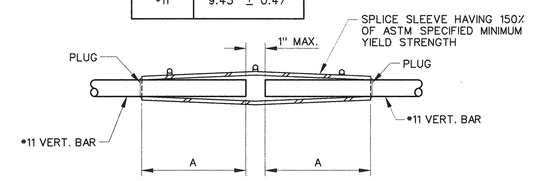

7 S5.1 | S5.1 TYPICAL PRECAST PANEL SPLICE SLEEVE
SCALE: 1 1/2" = 1'-0"

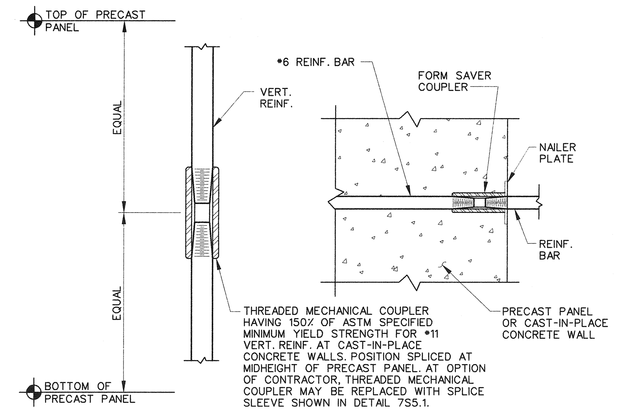

TYPICAL VERTICAL SPLICE TYPICAL DOWEL SPLICE

6 S5.1 | S5.1 TYPICAL CAST-IN-PLACE CONCRETE SPLICE
SCALE: NOT TO SCALE

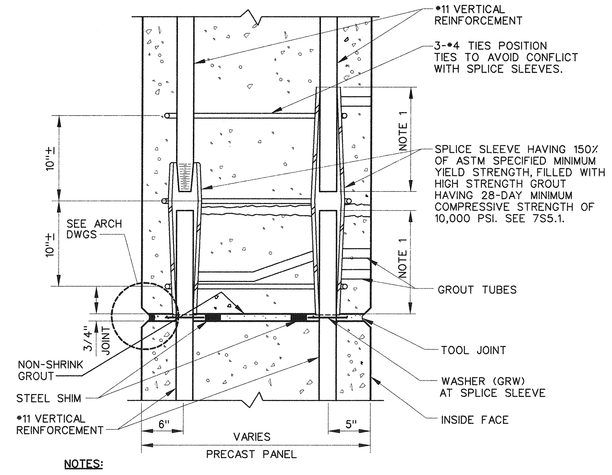

NOTES:
1. REINFORCEMENT EMBEDMENT LENGTH INTO SPLICE SLEEVE PER THE PRINTED REQUIREMENTS OF SPLICE SLEEVE MANUFACTURER.
2. SEE DETAIL 7S5.1 FOR INFORMATION NOT SHOWN.

5 S5.1 | S5.1 TYPICAL POST GROUT PRECAST PANEL SPLICE
SCALE: 1 1/2" = 1'-0"

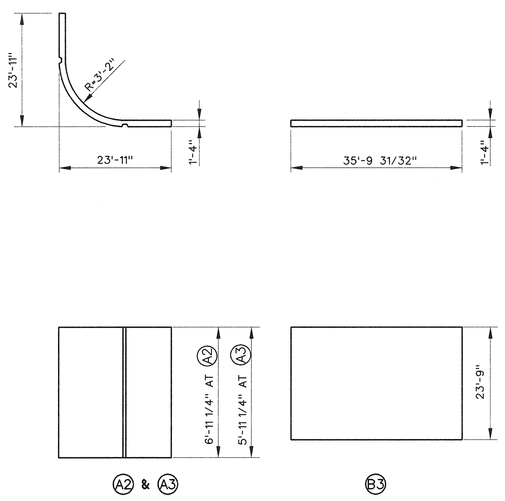

14 S5.1 | S5.1 STR P.C. MODULE A2, A3 & B3
SCALE: 1/4" = 1'-0"

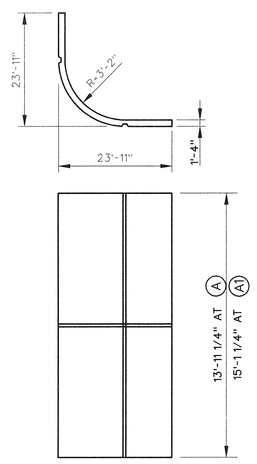

10 S5.1 | S5.1 STR P.C. MODULE A & A1
SCALE: 1/4" = 1'-0"

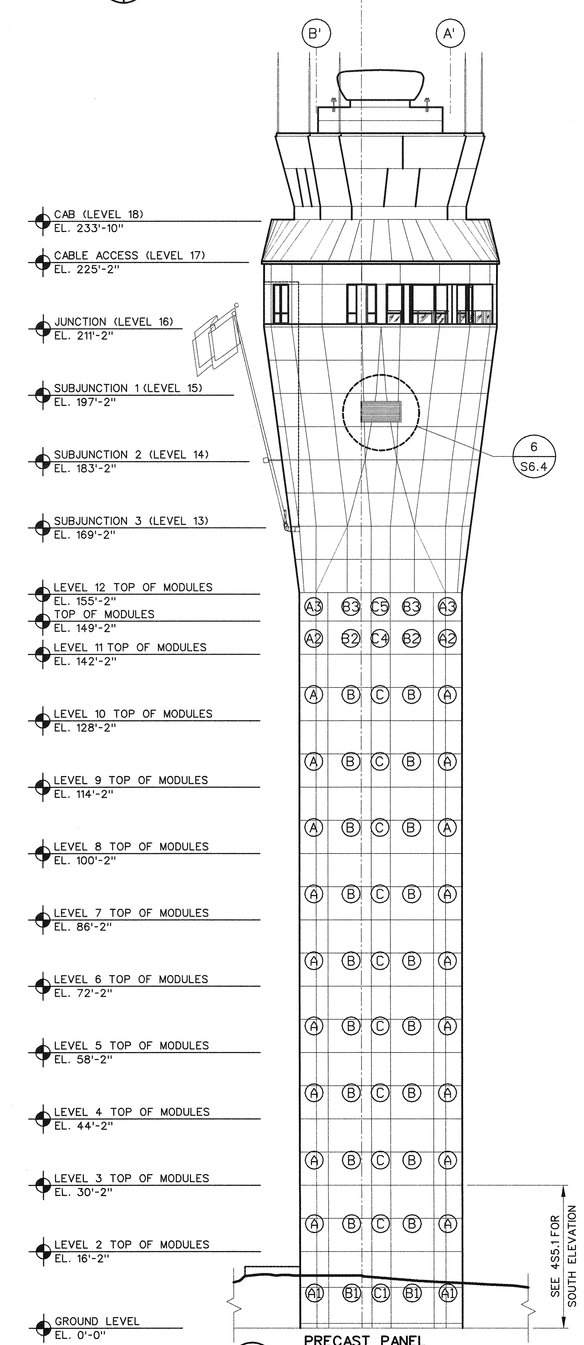

PRECAST PANEL
NORTH PLACEMENT ELEVATION
3 S2.1 | S5.1 SCALE: 1/16" = 1'-0"

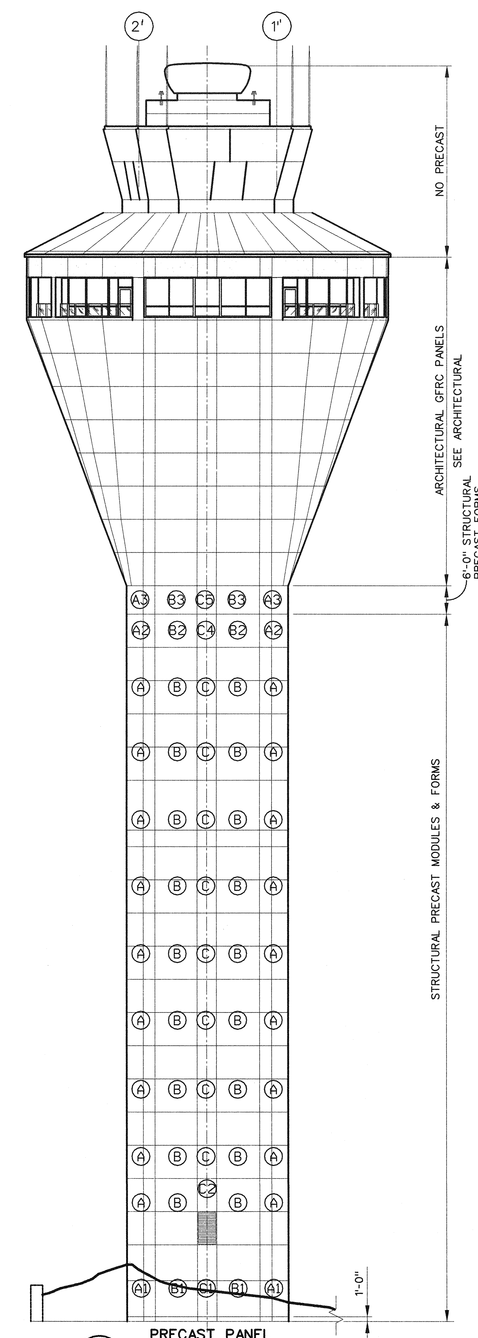

PRECAST PANEL
WEST PLACEMENT ELEVATION
2 S2.1 | S5.1 SCALE: 1/16" = 1'-0"

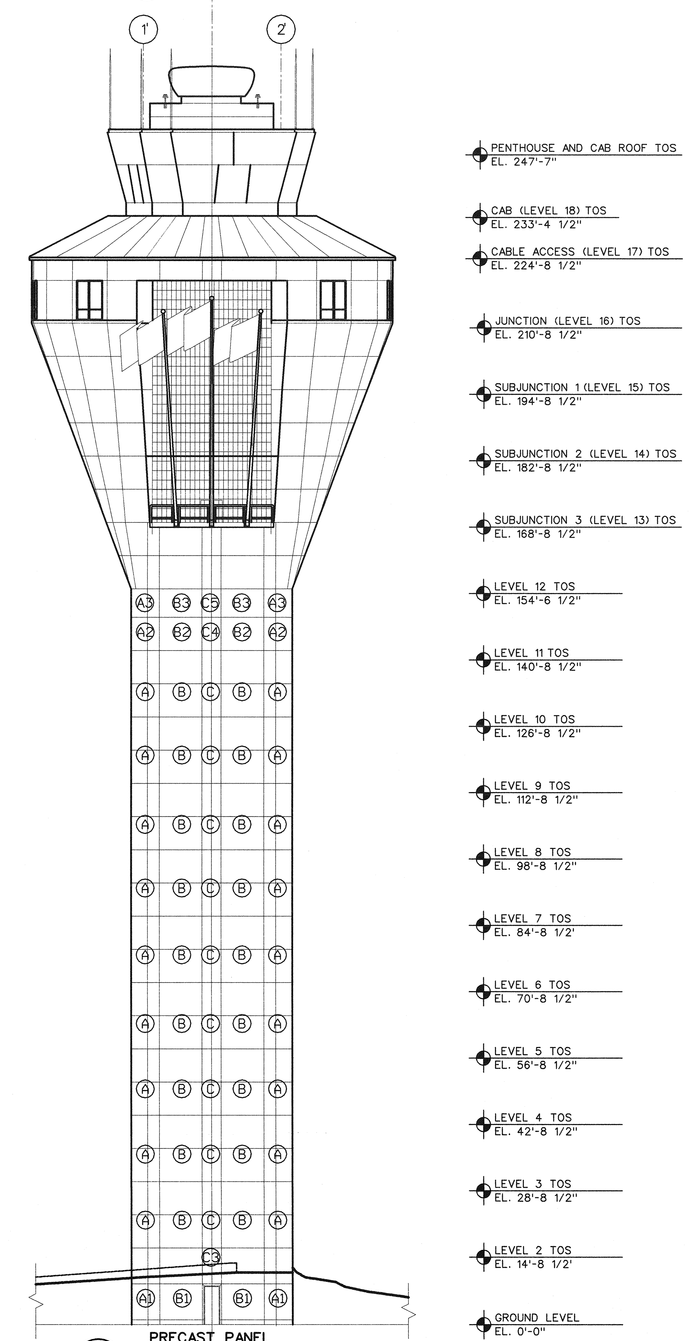

PRECAST PANEL
EAST PLACEMENT ELEVATION
1 S2.1 | S5.1 SCALE: 1/16" = 1'-0"

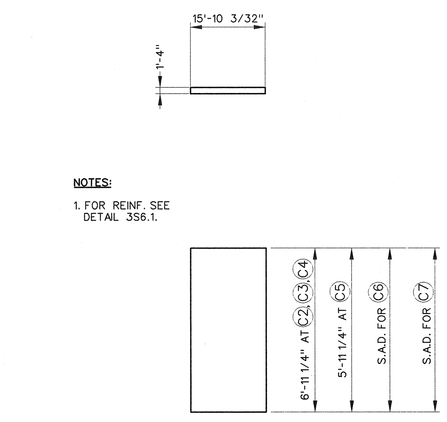

NOTES:
1. FOR REINF. SEE DETAIL 3S6.1.

13 S5.1 | S5.1 STR P.C. MODULE C2, C3, C4, C5, C6 & C7
SCALE: 1/4" = 1'-0"

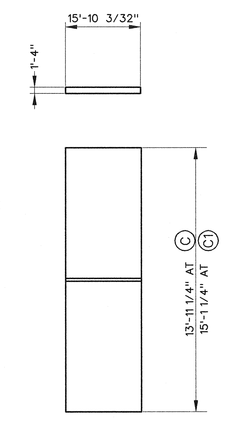

NOTES:
1. FOR REINF. SEE DETAIL 3S6.1.

9 S5.1 | S5.1 STR P.C. MODULE C & C1
SCALE: 1/4" = 1'-0"

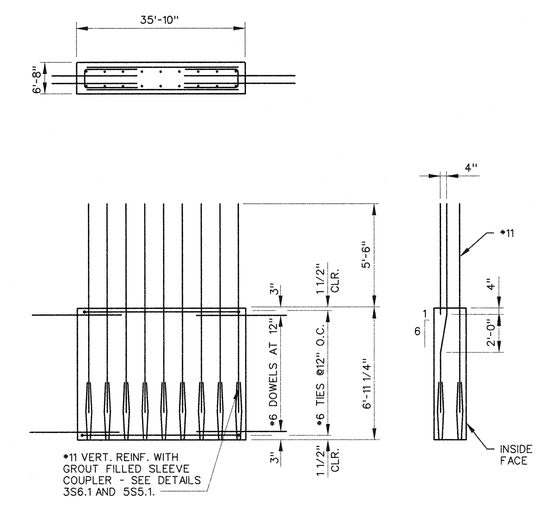

12 S5.1 | S5.1 STR P.C. MODULE B2
SCALE: 1/4" = 1'-0"

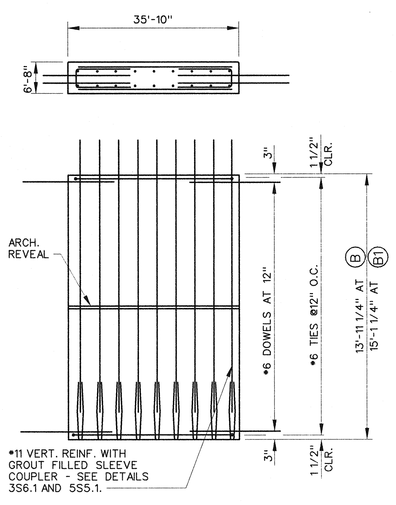

8 S5.1 | S5.1 STR P.C. MODULE B & B1
SCALE: 1/4" = 1'-0"

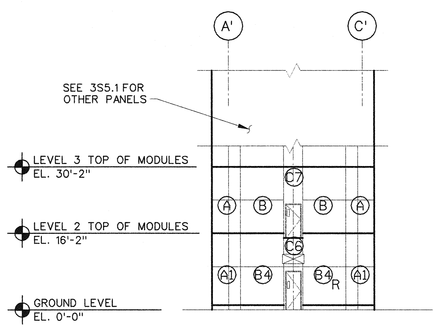

PRECAST PANEL
SOUTH PLACEMENT ELEVATION
4 S2.1 | S5.1 SCALE: 1/16" = 1'-0"

NOTES:
1. STRUCTURAL PRECAST PANELS ARE GROUPED PER GEOMETRY AND REINFORCEMENT. FOR EMBEDDED PLATE REQUIREMENTS, SEE FLOOR FRAMING PLANS AND DETAILS SHEETS.
2. ◯R INDICATES PRECAST PANEL IN REVERSE.
3. ◯ INDICATES PRECAST PANEL.
4. T.O.S. EQUALS TOP OF STEEL

PANEL	DETAIL
A, A1	10S5.1
A2, A3	14S5.1
B, B1	8S5.1
B2	12S5.1
B3	14S5.1
B4	11S5.1
C, C1	9S5.1
C2, C3, C4, C5, C6, C7	13S5.1

1' 9" 6" 3" 0 1'
SCALE: 1 1/2" = 1'-0"

4' 0 4' 8'
SCALE: 1/4" = 1'-0"

8' 0 10' 20' 30' 40'
SCALE: 1/16" = 1'-0"

REV	DATE	DESCRIPTION	JCN	REDLINE DATE	APVD
A	7-6-a	PROJ. REC. DWG: * SERIES WAS NME-601-41838	9602327	01/2002	

DEPARTMENT OF TRANSPORTATION
FEDERAL AVIATION ADMINISTRATION
SEATTLE IMPLEMENTATION CENTER SEATTLE, WA

ATCT
STRUCTURAL PRECAST CONCRETE MODULES

SEATTLE SEATTLE-TACOMA INTERNATIONAL AIRPORT WA

REVIEWED BY	SUBMITTED BY ORIGINAL DRAWING SIGNED BY:	APPROVED BY ORIGINAL DRAWING SIGNED BY:
	CURTIS HOWE, PE	RICHARD SOWA, PE
	PROJECT ENGINEER, ANI-840	SUPERVISOR, ANI-840

DESIGNED	URSG/WC	ISSUED BY NAS IMPLEMENTATION ANI-800	DATE 07/30/1999	JCN 9602327
DRAWN	URSG/WC		DRAWING NO SEA-E-ATCT-S5.1	REV A
CHECKED	URSG/WC			

THIS DRAWING PRODUCED ON THE NORTHWEST MOUNTAIN REGIONAL OFFICE MICROSTATION SYSTEM

JRSG/WC JOB NO. 53F007214961.53
24/29/2008 29:26 AM