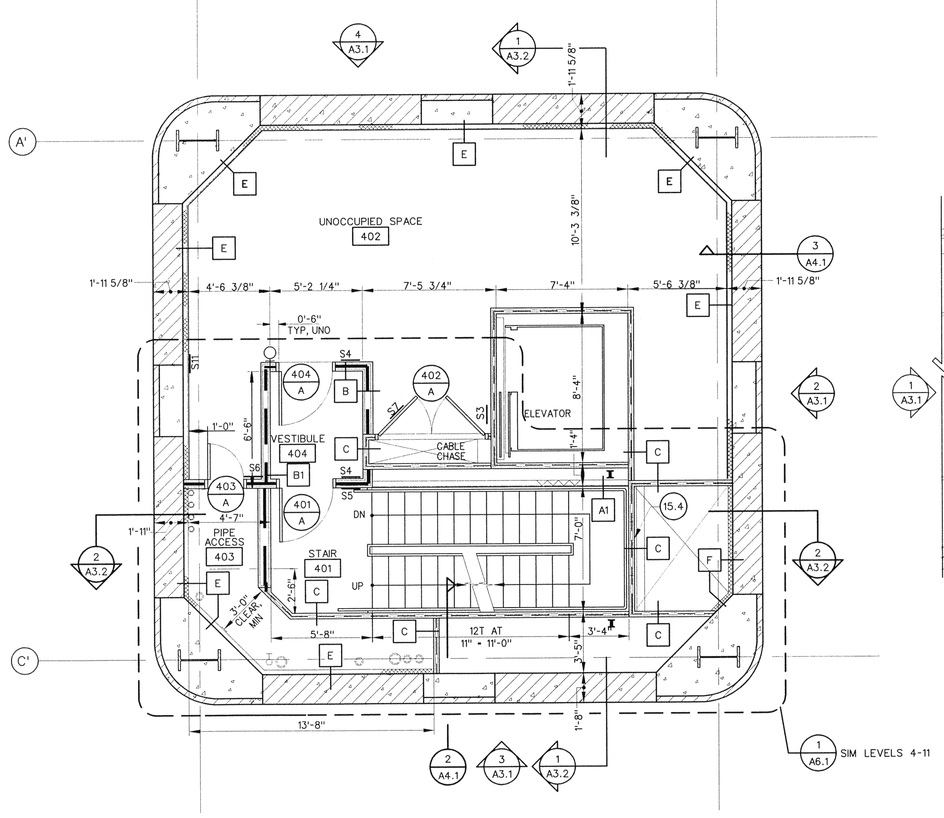

4 A2.1 A2.1 LEVEL 4 (EL 43'-2")
SCALE: 1/4" = 1'-0"

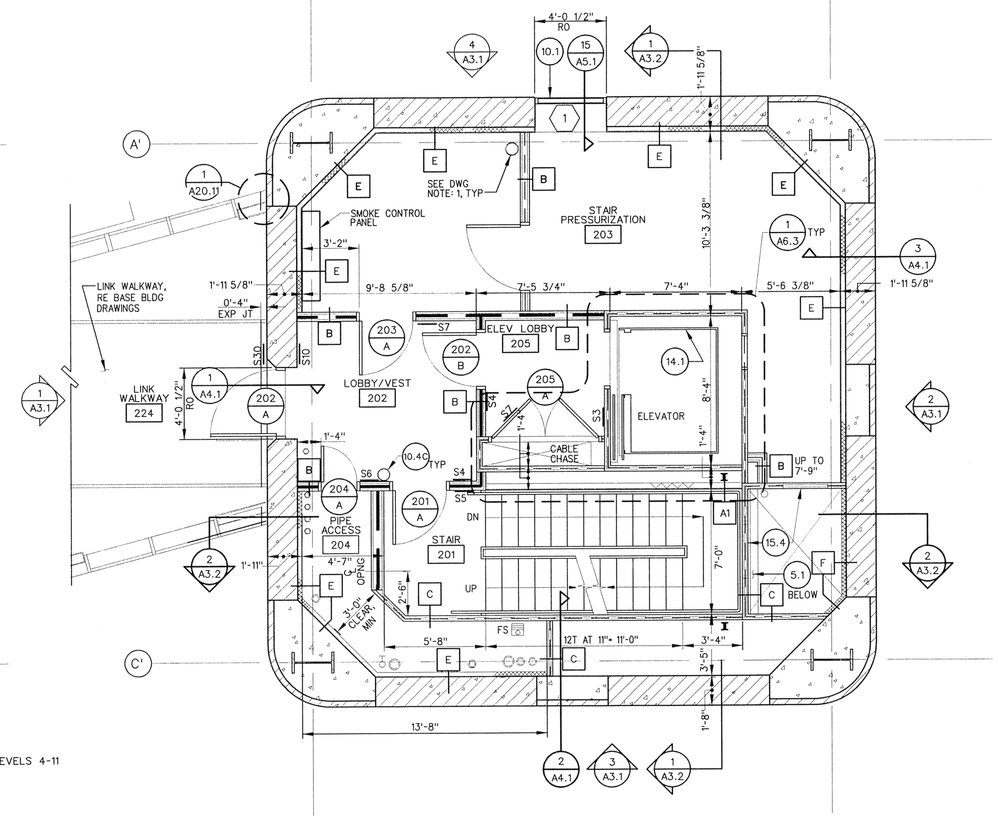

2 A2.1 A2.1 LEVEL 2 (EL 15'-2")
SCALE: 1/4" = 1'-0"

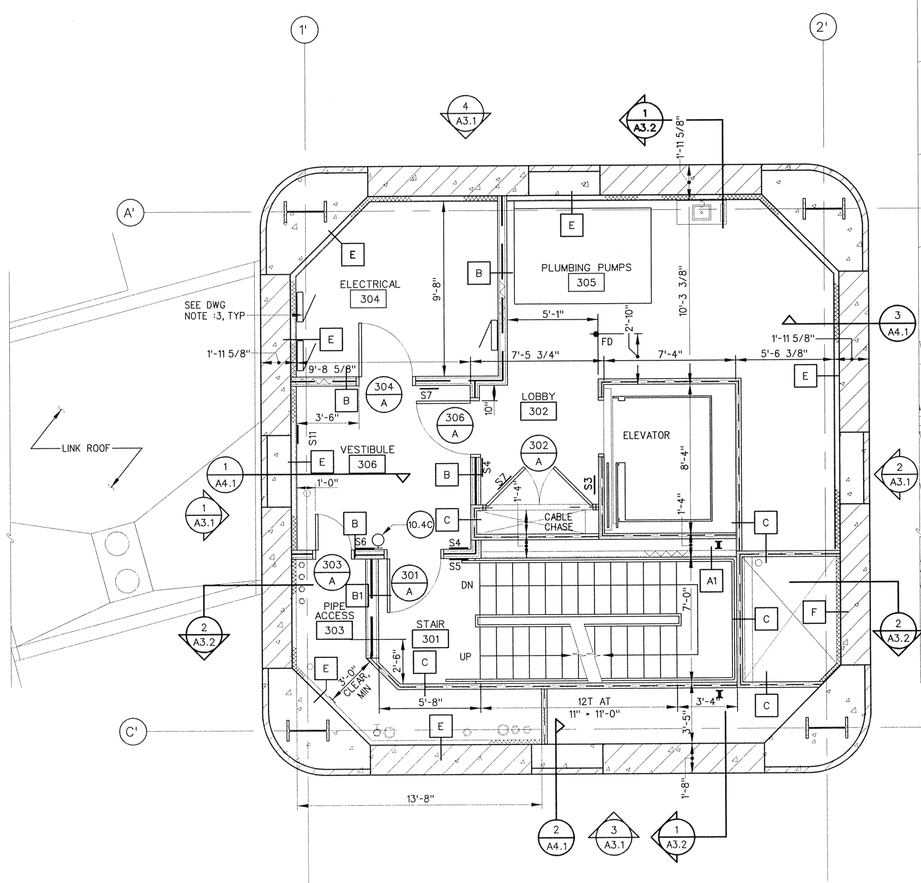

3 A2.1 A2.1 LEVEL 3 (EL 29'-2")
SCALE: 1/4" = 1'-0"

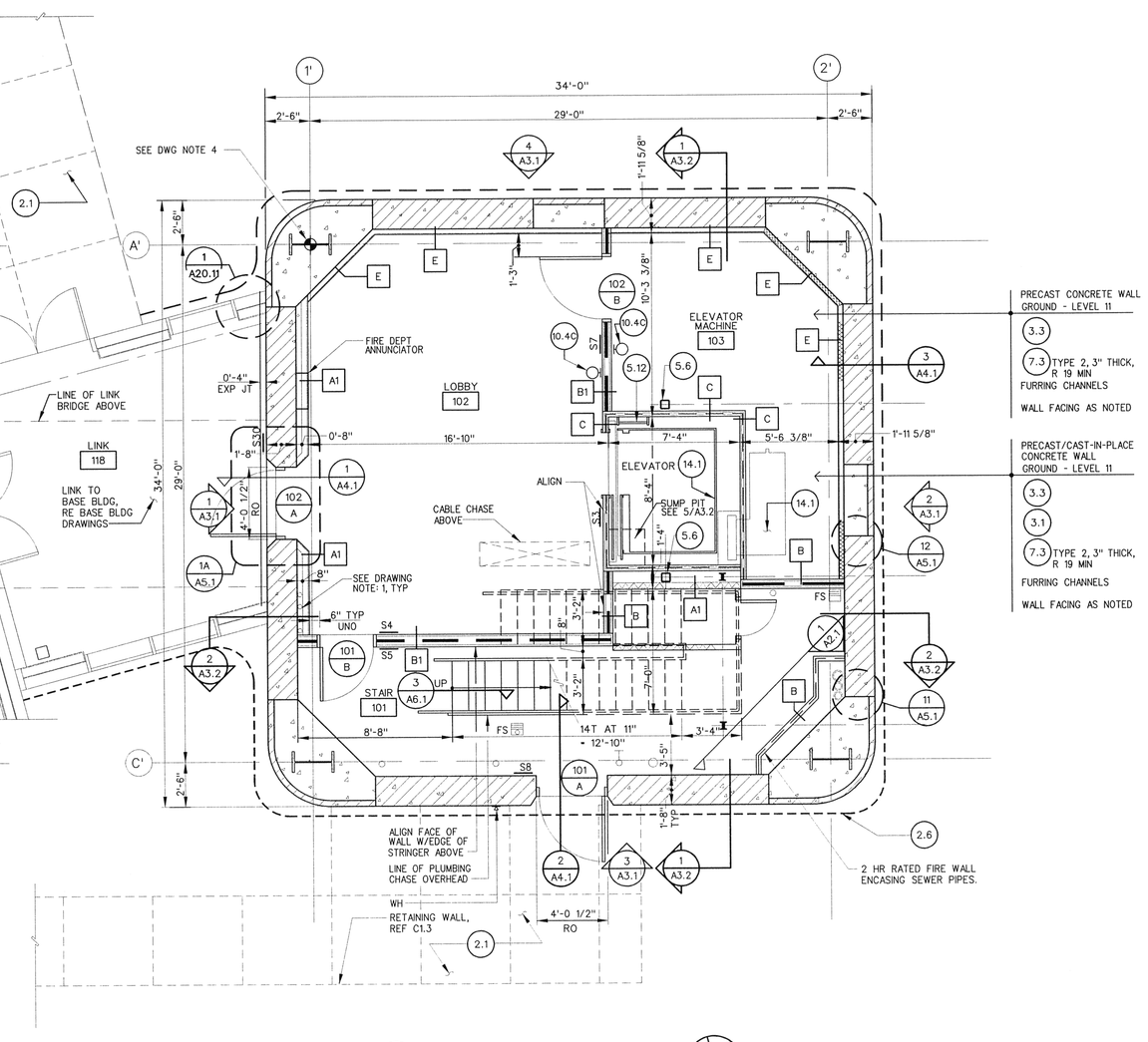

1 A2.1 A2.1 GROUND LEVEL (EL 0'-0")
SCALE: 1/4" = 1'-0"

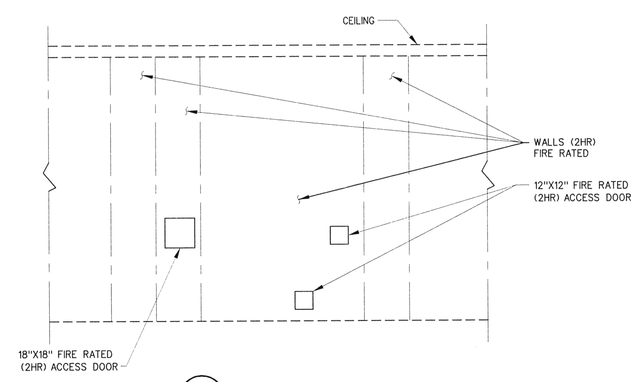

1 A2.1 A2.1 ELEVATION
SCALE: NONE

SCALE: 1/4" = 1'-0"

KEYNOTES

DIVISION 2
2.1 WALKWAY PAVING
2.2 PERIMETER FENCE
2.3 COURSE AGGREGATE
2.4 SUBGRADE
2.5 SAND
2.6 FOUNDATION DRAIN

DIVISION 3
3.1 CAST-IN-PLACE CONCRETE
3.2 CONCRETE FILL
3.3 PRECAST CONCRETE
3.4 GROUT
3.5 DRAINABLE FILL
3.6 GFRC
3.7 SAND
3.8 CONCRETE TOPPING
3.9 SHOT-CRETE
3.10 VAPOR RETARDER

DIVISION 4
4.1 CMU
4.2 WIRE TIES
4.3 GRANITE COUNTERTOP

DIVISION 5
5.1 STEEL WIDE FLANGE
5.2 STEEL CHANNEL
5.3 STEEL TEE
5.4 STEEL ANGLE
5.5 STEEL PLATE
5.6 STEEL TUBE
5.7 STEEL ROD
5.8 STEEL PIPE
5.9 METAL DECK
5.10 DECK EDGE FORM
5.11 SHEET METAL
5.12 METAL LADDER
5.13 METAL GUARDRAIL
5.14 OPEN WEB STEEL JOIST
5.15 EXPANSION JOINT ASSEMBLY
5.16 METAL STAIR
5.17 METAL HANDRAIL
5.18 NOT USED
5.19 EXTRUDED ALUMINUM
5.20 METAL SEISMIC JOINT ASSEMBLY
5.21 POWDER DRIVEN FASTENER

DIVISION 6
6.1 WOOD BLOCKING
6.2 SHIM
6.3 PLYWOOD
6.4 PLASTIC LAMINATE
6.5 HARDWOOD TRIM
6.6 HARDWOOD VENEER
6.7 CAST EPOXY RESIN COUNTERTOP & SPLASH
6.8 ROLLING WOOD LADDER

DIVISION 7
7.1 VAPOR BARRIER
7.2 BATT INSULATION
7.3* RIGID INSULATION
7.4 FLUID APPLIED WATERPROOFING, BELOW SLAB
7.5 HOT APPLIED LIQUID MEMBRANE,
7.6 TRAFFIC COATING
7.7 ROOF WALKWAY PADS
7.8 ROOF HATCH
7.9 METAL COPING
7.10 METAL FLASHING
7.11 BUILT-UP ROOFING
7.12 ICE AND WATER BARRIER
7.13 POLYESTER RESIN MEMBRANE
7.14 JOINT FILLER
7.15 SEALANT
7.16 SPRAYED FIREPROOFING
7.17 FIRESTOPPING
7.18 BACKER ROD
7.19 METAL SCREEN WALL
7.20 TRANSLUCENT PANEL
7.21 PERIMETER & UNDER SLAB INSULATION
7.22* MOISTURE BARRIER
7.23 ROOF PAVERS
7.24 DOWNSPOUTS
7.25 FLEXIBLE FLASHING
7.26 INSULATED METAL PANELS
7.27 INTUMESCENT FIREPROOFING

DIVISION 8
8.1 STEEL DOOR
8.2 STEEL FRAME
8.3 ACCESS DOOR
8.4 ALUMINUM CURTAIN WALL FRAME
8.5 INSULATED GLAZING
8.6 TEMPERED GLASS
8.7 COILING OVERHEAD COUNTER DOOR
8.8 METAL WINDOW
8.9 OVERHEAD DOOR
8.10 KEY LOCKBOX
8.11 COILING OVERHEAD DOOR

* ADDITIONAL TYPE AND / OR R VALUE WILL BE NOTED

DIVISION 9
9.1 METAL STUD
9.2 DEFLECTION TRACK
9.3 HAT CHANNEL
9.4 5/8" GYPSUM BOARD
9.5 1" GYPSUM SHAFT-LINER
9.6 CWB CONTROL JOINT
9.7 CERAMIC TILE
9.8 SUSPENDED ACOUSTICAL TILE CEILING
9.9 PAINT
9.10 RESILIENT FLOORING
9.11* CARPET
9.12 1" SHAFT WALL LINER
9.13 LAMINATED FLOORING
9.14 RUBBER TREADS / RISERS
9.15 CEMENT BOARD
9.16 ACOUSTICAL PANEL
9.17 FIBER CEMENT BOARD

DIVISION 10
10.1 METAL LOUVER
10.2 TOILET PARTITION
10.3 FIRE VALVE CABINET
10.4A FIRE EXTINGUISHER 4A/60 BC IN RECESSED CABINET
10.4C FIRE EXTINGUISHER 4A/60 BC WALL HUNG
10.5 METAL LOCKERS
10.6 RAISED ACCESS FLOOR
10.7 RECESSED FLOOR MAT AND FRAME
10.8 BULLETIN BOARD
10.9 WHITE BOARD
10.10 CORNER GUARDS
10.11 CHAIR RAIL
10.12 MAIL/DISTRIBUTION BOXES

DIVISION 11
11.1 PROJECTION SCREEN
11.2 ROOF SAFETY ANCHOR

DIVISION 12
12.1 WINDOW SHADES
12.2 WINDOW BLINDS
12.3 FOOT GRILLE

DIVISION 14
14.1 GEARED TRACTION ELEVATOR
14.2 HYDRAULIC ELEVATOR
14.3 MOTORIZED HOIST

DIVISION 15
15.1 ROOF DRAIN
15.2 FLOOR DRAIN
15.3 LINEAR DIFFUSER
15.4 HVAC DIFFUSER, GRILLE OR REGISTER
15.5 ELECTRIC WATER COOLER
15.6 MOTORIZED DAMPER
15.7 FIN-TUBE RADIATOR
15.8 ROOF-TOP HVAC EQUIPMENT
15.9 OVERFLOW DRAIN
15.10 ROOF TOP EQUIPMENT CURB
15.11 ROOM MECHANICAL UNIT
15.12 WATERCLOSET
15.13 URINAL
15.14 LAVATORY
15.15 SHOWER
15.16 EYE WASH UNIT
15.17 METAL LOUVERS
15.18 MOP SINK

DIVISION 16
16.1 LIGHT FIXTURE
16.2 AIR TERMINAL
16.3 ANTENNA MOUNT
16.4 OBSTRUCTION LIGHT
16.5 RACEWAY
16.6 LIGHTNING RODS
16.7 CARD READERS

DRAWING NOTES

1. PIPE OR CONDUIT SLEEVES THROUGH FLOOR: ALL OPENINGS TO BE FIRESTOPPED. SEE MECHANICAL SHEET M2.1, PLUMBING SHEET P2.1 AND STRUCTURAL SHEET S2.1 FOR OPENING SIZES AND LOCATIONS.
2. NOT USED.
3. ELECTRICAL PANEL BOARD, SEE ELECTRICAL SHEET E3.1 FOR TYPE AND MOUNTING HEIGHT.
4. GRID COORDINATES, SEE CIVIL DRAWING SHEET C1.6.

DRAWING SYMBOLS

— — — — 2-HOUR FIRE RATED SHAFT
▬ ▬ ▬ 2-HOUR FIRE RATED PARTITION

REV	DATE	DESCRIPTION	JCN	REDLINE DATE	APVD
A	7-6-09	PROJ. REC. DWG: • SERIES WAS NME-601-41838	9602327	01/2002	

DEPARTMENT OF TRANSPORTATION
FEDERAL AVIATION ADMINISTRATION
SEATTLE IMPLEMENTATION CENTER — SEATTLE, WA

ATCT
GROUND LEVEL TO LEVEL 4
FLOOR PLANS

SEATTLE — SEATTLE-TACOMA INTERNATIONAL AIRPORT — WA

REVIEWED BY	SUBMITTED BY ORIGINAL DRAWING SIGNED BY: CURTIS HOWE, PE	APPROVED BY ORIGINAL DRAWING SIGNED BY: RICHARD SOWA, PE
	PROJECT ENGINEER, ANI-840	SUPERVISOR, ANI-840
	DESIGNED URSG/WC	ISSUED BY NAS IMPLEMENTATION ANI-800 — DATE 07/30/1999 — JCN 9602327
	DRAWN URSG/WC	DRAWING NO SEA-E-ATCT-A2.1 — REV A
	CHECKED URSG/WC	